RELEASED 01/Jul/2021 13:46:12 GMT

DEVICE DESIGNATIONS, DESCRIPTIONS, LOCATION AND NOTES

DEVICE	DESCRIPTION	ZONE
1A1	ADAPTIVIEW TOUCH SCREEN DISPLAY	SHT 9-569
1B1	DRIVE PANEL VENTILATION FAN ENABLE TEMPERATURE SWITCH - CIRCUIT 1	SHT 2-44
1C1	POWER FACTOR CORRECTION CAPACITOR - CIRCUIT 1, COMPRESSOR 1B	SHT 3-78
1F1	SURGE ARRESTOR - CIRCUIT 1	SHT 2-20
1F2	CONTROL POWER TRANSFORMER PRIMARY FUSE BLOCK - CIRCUIT 1	SHT 3-91
1F4	CONDENSER FAN MOTOR FUSE BLOCK - CIRCUIT 1, BANK A	SHT 6-321
1F5	CONDENSER FAN MOTOR FUSE BLOCK - CIRCUIT 1, BANK A	SHT 6-371
1F6	CONDENSER FAN MOTOR FUSE BLOCK - CIRCUIT 1, BANK B	SHT 6-321
1F7	CONDENSER FAN MOTOR FUSE BLOCK - CIRCUIT 1, BANK B	SHT 6-371
1F8	POWER FACTOR CORRECTION CAPACITOR FUSE BLOCK - CIRCUIT 1, COMPRESSOR 1B	SHT 3-78
1K1	START CONTACTOR - CIRCUIT 1, COMPRESSOR 1B	SHT 3-104
1K2	RUN CONTACTOR - CIRCUIT 1, COMPRESSOR 1B	SHT 3-108
1K3	SHORTING CONTACTOR - CIRCUIT 1, COMPRESSOR 1B	SHT 3-111
1K4	TRANSITION CONTACTOR - CIRCUIT 1, COMPRESSOR 1B	SHT 3-114
1K5	HIGH PRESSURE CUTOUT INPUT - CIRCUIT 1, COMPRESSOR 1B	SHT 3-122
1K6	LOAD / UNLOAD SOLENOID VALVE OUTPUTS - CIRCUIT 1, COMPRESSOR 1B	SHT 3-131
1K7	STARTER MODULE - CIRCUIT 1, COMPRESSOR 1B	SHT 3-114
1K8	OIL LOSS LEVEL SENSOR INPUT - CIRCUIT 1	SHT 8-468
1K9	CONDENSER FAN FAULT INPUT - CIRCUIT 1	SHT 6-309
1K10	LEFT / RIGHT VARIABLE VI OUTPUTS - COMPRESSOR 1A	SHT 2-61
1K11	CONDENSER FAN ENABLE OUTPUTS - CIRCUIT 1	SHT 6-309
1K12	OIL VALVE CONTROL OUTPUTS - CIRCUIT 1, COMPRESSOR 1B	SHT 3-148
1K13	FREE COOLING MODULATING BYPASS VALVE ACTUATION	SHT 9-596
1K14	DRIVE COOLING 3-WAY VALVE I/O - COMPRESSOR 1A	SHT 8-478
1K16	CONDENSER FAN SPEED I/O - CIRCUIT 1	SHT 6-309
1K17	MOTOR WINDING TEMPERATURE SENSOR INPUT - CIRCUIT 1, COMPRESSOR 1A	SHT 2-71
1K18	EXTERNAL AUTO STOP AND EMERGENCY STOP INPUTS	SHT 10-630
1K19	WATER FLOW SENSOR / AUX CHILLED WATER SETPOINT INPUTS - CIRCUIT 1 AND 2	SHT 8-459
1K20	CHILLED WATER PUMP RELAY AND FREEZE AVOIDANCE REQUEST OUTPUTS	SHT 10-637
1K21	PROGRAMMABLE UNIT STATUS OUTPUTS	SHT 10-620
1K22	EXTERNAL CIRCUIT LOCKOUT INPUTS	SHT 10-621
1K23	ICE MAKING CONTROL AND NOISE REDUCTION REQUEST INPUTS	SHT 10-639
1K24	EXTERNAL DEMAND LIMIT AND CHILLED WATER SETPOINT INPUTS	SHT 10-609
1K28	LONTALK INTERFACE	SHT 9-570
1K29	SYMBIO 800 UNIT CONTROLLER	SHT 9-554
1K30	MODBUS CIRCUIT BREAKER INTERFACE - CIRCUIT 1	SHT 9-544
1K40	HEATER AND DRIVE COOLING PUMP RELAY - CIRCUIT 1, COMPRESSOR 1A	SHT 2-37
1M1	CONTROL PANEL VENTILATION FAN MOTOR - CIRCUIT 1	SHT 2-44
1Q1	POWER DISTRIBUTION MAIN CIRCUIT BREAKER - CIRCUIT 1	SHT 2-15
1Q2	POWER DISTRIBUTION CIRCUIT BREAKER - CIRCUIT 1, COMPRESSOR 1A	SHT 2-13
1Q3	CIRCUIT BREAKER, 27VAC TRANSFORMER - CIRCUIT 1	SHT 3-116
1R1	STARTER TRANSITION RESISTOR - CIRCUIT 1, COMPRESSOR 1B	SHT 3-84
1R2	STARTER TRANSITION RESISTOR - CIRCUIT 1, COMPRESSOR 1B	SHT 3-88
1R3	STARTER TRANSITION RESISTOR - CIRCUIT 1, COMPRESSOR 1B	SHT 3-92
1R4	ULP COMMUNICATION TERMINATION RESISTOR - CIRCUIT 1	SHT 9-549
1T1	DRIVE POWER MODULE - CIRCUIT 1, COMPRESSOR 1A	SHT 2-26
1T2	COMPRESSOR MOTOR CHOKE - CIRCUIT 1, COMPRESSOR 1A	SHT 2-26
1T3	LINE CURRENT TRANSFORMER - CIRCUIT 1, COMPRESSOR 1B	SHT 3-81
1T4	LINE CURRENT TRANSFORMER - CIRCUIT 1, COMPRESSOR 1B	SHT 3-85
1T5	LINE CURRENT TRANSFORMER - CIRCUIT 1, COMPRESSOR 1B	SHT 3-89
1T6	LINE POTENTIAL TRANSFORMER - CIRCUIT 1, COMPRESSOR 1B	SHT 3-101
1T7	LINE POTENTIAL TRANSFORMER - CIRCUIT 1, COMPRESSOR 1B	SHT 3-101
1T8	LINE POTENTIAL TRANSFORMER - CIRCUIT 1, COMPRESSOR 1B	SHT 3-101
1T9	CONTROL POWER TRANSFORMER - CLASS 1, 110-120VAC SECONDARY - CIRCUIT 1	SHT 3-104
1T10	CONTROL POWER TRANSFORMER - CLASS 1, 27VAC SECONDARY - CIRCUIT 1	SHT 3-122
1T11	24VDC POWER SUPPLY MODULE - CIRCUIT 1	SHT 3-139
1T12	24VDC POWER SUPPLY MODULE - CIRCUIT 1	SHT 3-143
1X1	POWER DISTRIBUTION MAIN TERMINAL BLOCK - CIRCUIT 1	SHT 2-6
1X2	CONTROL TERMINAL BLOCK - CIRCUIT 1	SHT 3-112
1X3	CONTROL TERMINAL BLOCK - CIRCUIT 1	SHT 6-311
1X4	CUSTOMER CONNECTION TERMINAL BLOCK	SHT 2-74
1X5	POWER MONITORING MODBUS TERMINAL BLOCK	SHT 9-536
1XJ1	JACK; MALE, 110-120VAC SERVICE POWER - CIRCUIT 1	SHT 3-119
1XJ3	CUSTOMER CONVENIENCE OUTLET	SHT 2-73
1XJ4	EXTERNAL USB SERVICE PORT	SHT 9-560
1XP1	PLUG; FEMALE, 110-120VAC SERVICE POWER - CIRCUIT 1	SHT 3-119
2B1	DRIVE PANEL VENTILATION FAN ENABLE TEMPERATURE SWITCH - CIRCUIT 2	SHT 4-194
2C1	POWER FACTOR CORRECTION CAPACITOR - CIRCUIT 2, COMPRESSOR 2B	SHT 5-228
2F1	SURGE ARRESTOR - CIRCUIT 2	SHT 4-170
2F2	CONTROL POWER TRANSFORMER PRIMARY FUSE BLOCK - CIRCUIT 2	SHT 5-241
2F4	CONDENSER FAN MOTOR FUSE BLOCK - CIRCUIT 2, BANK A	SHT 7-396
2F5	CONDENSER FAN MOTOR FUSE BLOCK - CIRCUIT 2, BANK A	SHT 7-436
2F6	CONDENSER FAN MOTOR FUSE BLOCK - CIRCUIT 2, BANK B	SHT 7-396
2F7	CONDENSER FAN MOTOR FUSE BLOCK - CIRCUIT 2, BANK B	SHT 7-436
2F8	POWER FACTOR CORRECTION CAPACITOR FUSE BLOCK - CIRCUIT 2, COMPRESSOR 2B	SHT 5-228
2K1	START CONTACTOR - CIRCUIT 2, COMPRESSOR 2B	SHT 5-254
2K2	RUN CONTACTOR - CIRCUIT 2, COMPRESSOR 2B	SHT 5-258
2K3	SHORTING CONTACTOR - CIRCUIT 2, COMPRESSOR 2B	SHT 5-261
2K4	TRANSITION CONTACTOR - CIRCUIT 2, COMPRESSOR 2B	SHT 5-264
2K5	HIGH PRESSURE CUTOUT INPUT - CIRCUIT 2, COMPRESSOR 2B	SHT 5-272
2K6	LOAD / UNLOAD SOLENOID VALVE OUTPUTS - CIRCUIT 2, COMPRESSOR 2B	SHT 5-281
2K7	STARTER MODULE - CIRCUIT 2, COMPRESSOR 2B	SHT 5-264
2K8	OIL LOSS LEVEL SENSOR INPUT - CIRCUIT 2	SHT 8-489
2K9	CONDENSER FAN FAULT INPUT - CIRCUIT 2	SHT 7-384
2K10	LEFT / RIGHT VARIABLE VI OUTPUTS - COMPRESSOR 2A	SHT 4-212
2K11	CONDENSER FAN ENABLE OUTPUTS - CIRCUIT 2	SHT 7-384
2K12	OIL VALVE CONTROL OUTPUTS - CIRCUIT 2	SHT 5-298
2K14	DRIVE COOLING 3-WAY VALVE I/O - COMPRESSOR 2A	SHT 8-499
2K16	CONDENSER FAN SPEED I/O - CIRCUIT 2	SHT 7-384
2K17	MOTOR WINDING TEMPERATURE SENSOR INPUT - CIRCUIT 2, COMPRESSOR 2A	SHT 4-221
2K30	MODBUS CIRCUIT BREAKER INTERFACE - CIRCUIT 2	SHT 9-544
2K31	CIRCUIT BREAKER ISOLATION MODULE - CIRCUIT 2	SHT 9-566
2K40	HEATER AND DRIVE COOLING PUMP RELAY - CIRCUIT 2, COMPRESSOR 2A	SHT 4-187
2M1	CONTROL PANEL VENTILATION FAN MOTOR - CIRCUIT 2	SHT 4-194
2Q1	POWER DISTRIBUTION MAIN CIRCUIT BREAKER - CIRCUIT 2	SHT 4-163
2Q2	POWER DISTRIBUTION CIRCUIT BREAKER - CIRCUIT 2, COMPRESSOR 2A	SHT 4-163
2Q3	CIRCUIT BREAKER, 27VAC TRANSFORMER - CIRCUIT 2	SHT 5-267
2R1	STARTER TRANSITION RESISTOR - CIRCUIT 2, COMPRESSOR 2B	SHT 5-234
2R2	STARTER TRANSITION RESISTOR - CIRCUIT 2, COMPRESSOR 2B	SHT 5-238
2R3	STARTER TRANSITION RESISTOR - CIRCUIT 2, COMPRESSOR 2B	SHT 5-242
2R4	ULP COMMUNICATION TERMINATION RESISTOR - CIRCUIT 2	SHT 9-549
2T1	DRIVE POWER MODULE - CIRCUIT 2, COMPRESSOR 2A	SHT 4-176
2T2	COMPRESSOR MOTOR CHOKE - CIRCUIT 2, COMPRESSOR 2A	SHT 4-176
2T3	LINE CURRENT TRANSFORMER - CIRCUIT 2, COMPRESSOR 2B	SHT 5-231
2T4	LINE CURRENT TRANSFORMER - CIRCUIT 2, COMPRESSOR 2B	SHT 5-235
2T5	LINE CURRENT TRANSFORMER - CIRCUIT 2, COMPRESSOR 2B	SHT 5-239
2T6	LINE POTENTIAL TRANSFORMER - CIRCUIT 2, COMPRESSOR 2B	SHT 5-251
2T7	LINE POTENTIAL TRANSFORMER - CIRCUIT 2, COMPRESSOR 2B	SHT 5-251
2T8	LINE POTENTIAL TRANSFORMER - CIRCUIT 2, COMPRESSOR 2B	SHT 5-251
2T9	CONTROL POWER TRANSFORMER - CLASS 1, 110-120VAC SECONDARY - CIRCUIT 2	SHT 5-254
2T10	CONTROL POWER TRANSFORMER - CLASS 1, 27VAC SECONDARY - CIRCUIT 2	SHT 5-274
2T11	24VDC POWER SUPPLY MODULE - CIRCUIT 2	SHT 5-291
2X1	POWER DISTRIBUTION MAIN TERMINAL BLOCK - CIRCUIT 2	SHT 4-156
2X2	CONTROL TERMINAL BLOCK - CIRCUIT 2	SHT 5-263
2X3	CONTROL TERMINAL BLOCK - CIRCUIT 2	SHT 7-386
2XJ1	JACK; MALE, 110-120VAC SERVICE POWER - CIRCUIT 2	SHT 5-270
2XP1	PLUG; FEMALE, 110-120VAC SERVICE POWER - CIRCUIT 2	SHT 5-270
3B1	HARMONIC FILTER OVERTEMP SWITCH - CIRCUIT 1, COMPRESSOR 1A	SHT 2-45
3B2	VOLTAGE AUTOTRANSFORMER OVERTEMP SWITCH - CIRCUIT 1, COMPRESSOR 1A	SHT 2-51
3B3	OPTIONS PANEL BIMETALLIC THERMOSTAT - CIRCUIT 1	SHT 2-63
3C1	HARMONIC FILTER CAPACITOR BANK 1 - CIRCUIT 1, COMPRESSOR 1A	SHT 2-39
3C2	HARMONIC FILTER CAPACITOR BANK 2 - CIRCUIT 1, COMPRESSOR 1A	SHT 2-39
3K1	HARMONIC FILTER CAPACITOR CONTACTOR - CIRCUIT 1, COMPRESSOR 1A	SHT 2-40
3M1	OPTIONS PANEL COOLING FAN MOTOR 1 - CIRCUIT 1	SHT 2-65
3M2	OPTIONS PANEL COOLING FAN MOTOR 2 - CIRCUIT 1	SHT 2-68
3RF1	HARMONIC FILTER - CIRCUIT 1, COMPRESSOR 1A	SHT 2-22
3T1	INCOMING LINE VOLTAGE AUTOTRANSFORMER - CIRCUIT 1, COMPRESSOR 1A	SHT 2-13
4B1	HARMONIC FILTER OVERTEMP SWITCH - CIRCUIT 2, COMPRESSOR 2A	SHT 4-195
4B2	VOLTAGE AUTOTRANSFORMER OVERTEMP SWITCH - CIRCUIT 2, COMPRESSOR 2A	SHT 4-201
4B3	OPTIONS PANEL BIMETALLIC THERMOSTAT - CIRCUIT 2	SHT 4-217
4C1	HARMONIC FILTER CAPACITOR BANK 1 - CIRCUIT 2, COMPRESSOR 2A	SHT 4-189
4C2	HARMONIC FILTER CAPACITOR BANK 2 - CIRCUIT 2, COMPRESSOR 2A	SHT 4-189
4K1	HARMONIC FILTER CAPACITOR CONTACTOR - CIRCUIT 2, COMPRESSOR 2A	SHT 4-190
4M1	OPTIONS PANEL COOLING FAN MOTOR 1 - CIRCUIT 2	SHT 4-219
4M2	OPTIONS PANEL COOLING FAN MOTOR 2 - CIRCUIT 2	SHT 4-222
4RF1	HARMONIC FILTER - CIRCUIT 2, COMPRESSOR 2A	SHT 4-172
4T1	INCOMING LINE VOLTAGE AUTOTRANSFORMER - CIRCUIT 2, COMPRESSOR 2A	SHT 4-163
5B1	HIGH PRESSURE CUTOUT SWITCH - CIRCUIT 1, COMPRESSOR 1A	SHT 2-50
5B2	HIGH PRESSURE CUTOUT SWITCH - CIRCUIT 1, COMPRESSOR 1B	SHT 3-118
5B4	EVAPORATOR HEATER CONTROL TEMPERATURE SWITCH	SHT 2-74
5BF1	CHILLED WATER FLOW SENSOR - CIRCUIT 1 AND 2	SHT 8-457
5BL1	OIL LOSS LEVEL SENSOR - CIRCUIT 1	SHT 8-463
5BP1	SUCTION REFRIGERANT PRESSURE TRANSDUCER - CIRCUIT 1, COMPRESSOR 1A	SHT 8-453
5BP2	SUCTION REFRIGERANT PRESSURE TRANSDUCER - CIRCUIT 1, COMPRESSOR 1B	SHT 8-456
5BP3	DISCHARGE REFRIGERANT PRESSURE TRANSDUCER - CIRCUIT 1	SHT 8-459
5BP4	OIL PRESSURE TRANSDUCER - CIRCUIT 1, COMPRESSOR 1A	SHT 8-462
5BP5	OIL PRESSURE TRANSDUCER - CIRCUIT 1, COMPRESSOR 1B	SHT 8-465
5BP6	LIQUID LINE REFRIGERANT PRESSURE TRANSDUCER - CIRCUIT 1	SHT 8-468
5BT1	MOTOR WINDING TEMPERATURE RTD - CIRCUIT 1, COMPRESSOR 1A	SHT 2-68
5BT2	MOTOR WINDING TEMPERATURE RTD - CIRCUIT 1, COMPRESSOR 1A	SHT 2-69
5BT3	DISCHARGE TEMPERATURE SENSOR - CIRCUIT 1, COMPRESSOR 1A	SHT 8-471
5BT4	DISCHARGE TEMPERATURE SENSOR - CIRCUIT 1, COMPRESSOR 1B	SHT 8-474
5BT5	LIQUID LINE TEMPERATURE SENSOR - CIRCUIT 1	SHT 8-477
5BT6	EVAPORATOR REFRIGERANT POOL TEMPERATURE SENSOR - CIRCUIT 1	SHT 8-480
5BT7	EVAPORATOR ENTERING WATER TEMPERATURE SENSOR	SHT 8-483
5BT8	EVAPORATOR LEAVING WATER TEMPERATURE SENSOR	SHT 8-486
5BT9	DRIVE COOLING SUPPLY TEMPERATURE SENSOR - CIRCUIT 1, COMPRESSOR 1A	SHT 8-489
5BT10	OUTDOOR AIR TEMPERATURE SENSOR	SHT 8-492
5BT12	OIL SUPPLY TEMPERATURE SENSOR - CIRCUIT 1	SHT 8-501
5BT13	FREE COOLING ENTERING WATER TEMPERATURE SENSOR	SHT 8-495
5E1	IMMERSION HEATER - CIRCUIT 1, COMPRESSOR 1A	SHT 2-50
5E2	DISCHARGE AND BEARING HEATER - CIRCUIT 1, COMPRESSOR 1A	SHT 2-51
5E3	OIL SEPARATOR HEATER - CIRCUIT 1	SHT 2-56
5E4	IMMERSION HEATER - CIRCUIT 1, COMPRESSOR 1B	SHT 3-97
5E5	EVAPORATOR IMMERSION HEATER	SHT 2-74
5E6	EVAPORATOR IMMERSION HEATER	SHT 2-73
5E7	EVAPORATOR IMMERSION HEATER	SHT 2-72
5E8	EVAPORATOR IMMERSION HEATER	SHT 2-71
5L1	LEFT VARIABLE VI SOLENOID - CIRCUIT 1, COMPRESSOR 1A	SHT 2-61
5L2	RIGHT VARIABLE VI SOLENOID - CIRCUIT 1, COMPRESSOR 1A	SHT 2-59
5L3	OIL RETURN SHUTOFF VALVE - CIRCUIT 1, COMPRESSOR 1B	SHT 3-148
5L4	FEMALE STEP LOAD VALVE - CIRCUIT 1, COMPRESSOR 1B	SHT 3-145
5L5	PUMP DOWN CONTROL VALVE - CIRCUIT 1	SHT 3-142
5L6	COMPRESSOR LOAD SOLENOID VALVE - CIRCUIT 1, COMPRESSOR 1B	SHT 3-129
5L7	COMPRESSOR UNLOAD SOLENOID VALVE - CIRCUIT 1, COMPRESSOR 1B	SHT 3-131
5M1	COMPRESSOR MOTOR 1A - CIRCUIT 1	SHT 2-26
5M2	COMPRESSOR MOTOR 1B - CIRCUIT 1	SHT 3-81
5M3	DRIVE COOLING PUMP MOTOR - COMPRESSOR 1A	SHT 2-47
5M4	DRIVE COOLING 3-WAY VALVE MOTOR - CIRCUIT 1, COMPRESSOR 1A	SHT 8-476
5M5	MODULATING BYPASS VALVE ACTUATOR, DIRECT FREE COOLING	SHT 9-590
5M6	MODULATING BYPASS VALVE ACTUATOR, DIRECT FREE COOLING	SHT 9-595
5M11	CONDENSER FAN MOTOR 1 - CIRCUIT 1, BANK A	SHT 6-329
5M12	CONDENSER FAN MOTOR 2 - CIRCUIT 1, BANK B	SHT 6-329
5M13	CONDENSER FAN MOTOR 3 - CIRCUIT 1, BANK A	SHT 6-334
5M14	CONDENSER FAN MOTOR 4 - CIRCUIT 1, BANK B	SHT 6-334

DEVICE	DESCRIPTION	ZONE
5M15	CONDENSER FAN MOTOR 5 - CIRCUIT 1, BANK A	SHT 6-339
5M16	CONDENSER FAN MOTOR 6 - CIRCUIT 1, BANK B	SHT 6-339
5M17	CONDENSER FAN MOTOR 7 - CIRCUIT 1, BANK A	SHT 6-344
5M18	CONDENSER FAN MOTOR 8 - CIRCUIT 1, BANK B	SHT 6-344
5M19	CONDENSER FAN MOTOR 9 - CIRCUIT 1, BANK A	SHT 6-349
5M20	CONDENSER FAN MOTOR 10 - CIRCUIT 1, BANK B	SHT 6-349
5M21	CONDENSER FAN MOTOR 11 - CIRCUIT 1, BANK A	SHT 6-354
5M22	CONDENSER FAN MOTOR 12 - CIRCUIT 1, BANK B	SHT 6-354
5M23	CONDENSER FAN MOTOR 13 - CIRCUIT 1, BANK A	SHT 6-359
5M24	CONDENSER FAN MOTOR 14 - CIRCUIT 1, BANK B	SHT 6-359
5M25	ELECTRONIC EXPANSION VALVE 1 - CIRCUIT 1	SHT 8-504
5M26	ELECTRONIC EXPANSION VALVE 2 - CIRCUIT 1	SHT 8-507
5M27	OIL RETURN VALVE - COMPRESSOR 1A	SHT 8-510
5X1	OIL SEPARATOR TERMINAL BLOCK - CIRCUIT 1	SHT 8-469
5X2	COMPRESSOR MOTOR ENCLOSURE TERMINAL BLOCK - COMPRESSOR 1B	SHT 3-148
5X3	EVAPORATOR HEATER TERMINAL BLOCK	SHT 2-74
5Y1	WI-FI INTERFACE	SHT 9-563
5Y2	LTE INTERFACE	SHT 9-567
5Y3	AIR-FI INTERFACE	SHT 9-547
6B1	HIGH PRESSURE CUTOUT SWITCH - CIRCUIT 2, COMPRESSOR 2A	SHT 4-200
6B2	HIGH PRESSURE CUTOUT SWITCH - COMPRESSOR 2B	SHT 5-268
6BL1	OIL LOSS LEVEL SENSOR - CIRCUIT 2	SHT 8-484
6BP1	SUCTION REFRIGERANT PRESSURE TRANSDUCER - CIRCUIT 2, COMPRESSOR 2A	SHT 8-453
6BP2	SUCTION REFRIGERANT PRESSURE TRANSDUCER - CIRCUIT 2, COMPRESSOR 2B	SHT 8-456
6BP3	DISCHARGE REFRIGERANT PRESSURE TRANSDUCER - CIRCUIT 2	SHT 8-459
6BP4	OIL PRESSURE TRANSDUCER - CIRCUIT 2, COMPRESSOR 2A	SHT 8-462
6BP5	OIL PRESSURE TRANSDUCER - CIRCUIT 2, COMPRESSOR 2B	SHT 8-465
6BP6	LIQUID LINE REFRIGERANT PRESSURE TRANSDUCER - CIRCUIT 2	SHT 8-468
6BT1	MOTOR WINDING TEMPERATURE RTD - CIRCUIT 2, COMPRESSOR 2A	SHT 4-218
6BT2	MOTOR WINDING TEMPERATURE RTD - CIRCUIT 2, COMPRESSOR 2A	SHT 4-219
6BT3	DISCHARGE TEMPERATURE SENSOR - CIRCUIT 2, COMPRESSOR 2A	SHT 8-471
6BT4	DISCHARGE TEMPERATURE SENSOR - CIRCUIT 2, COMPRESSOR 2B	SHT 8-474
6BT5	LIQUID LINE TEMPERATURE SENSOR - CIRCUIT 2	SHT 8-477
6BT6	EVAPORATOR REFRIGERANT POOL TEMPERATURE SENSOR - CIRCUIT 2	SHT 8-480
6BT9	DRIVE COOLING SUPPLY TEMPERATURE SENSOR - CIRCUIT 2, COMPRESSOR 2A	SHT 8-489
6BT12	OIL SUPPLY TEMPERATURE SENSOR - CIRCUIT 2	SHT 8-498
6E1	IMMERSION HEATER - CIRCUIT 2, COMPRESSOR 2A	SHT 4-200
6E2	DISCHARGE AND BEARING HEATER - CIRCUIT 2, COMPRESSOR 2A	SHT 4-201
6E3	OIL SEPARATOR HEATER - CIRCUIT 2	SHT 4-207
6E4	IMMERSION HEATER - CIRCUIT 2, COMPRESSOR 2B	SHT 5-247
6L1	LEFT VARIABLE VI SOLENOID - CIRCUIT 2, COMPRESSOR 2A	SHT 4-212
6L2	RIGHT VARIABLE VI SOLENOID - CIRCUIT 2, COMPRESSOR 2A	SHT 4-210
6L3	OIL RETURN SHUTOFF VALVE - CIRCUIT 2, COMPRESSOR 2B	SHT 5-298
6L4	FEMALE STEP LOAD VALVE - CIRCUIT 2, COMPRESSOR 2B	SHT 5-295
6L5	PUMP DOWN CONTROL VALVE - CIRCUIT 2	SHT 5-291
6L6	COMPRESSOR LOAD SOLENOID VALVE - CIRCUIT 2, COMPRESSOR 2B	SHT 5-279
6L7	COMPRESSOR UNLOAD SOLENOID VALVE - CIRCUIT 2, COMPRESSOR 2B	SHT 5-281
6M1	COMPRESSOR MOTOR 2A - CIRCUIT 2	SHT 4-176
6M2	COMPRESSOR MOTOR 2B - CIRCUIT 2	SHT 5-231
6M3	DRIVE COOLING PUMP MOTOR - COMPRESSOR 2A	SHT 4-197
6M4	DRIVE COOLING 3-WAY VALVE MOTOR - CIRCUIT 2, COMPRESSOR 2A	SHT 8-497
6M11	CONDENSER FAN MOTOR 1 - CIRCUIT 2, BANK A	SHT 7-404
6M12	CONDENSER FAN MOTOR 2 - CIRCUIT 2, BANK B	SHT 7-404
6M13	CONDENSER FAN MOTOR 3 - CIRCUIT 2, BANK A	SHT 7-409
6M14	CONDENSER FAN MOTOR 4 - CIRCUIT 2, BANK B	SHT 7-409
6M15	CONDENSER FAN MOTOR 5 - CIRCUIT 2, BANK A	SHT 7-414
6M16	CONDENSER FAN MOTOR 6 - CIRCUIT 2, BANK B	SHT 7-414
6M17	CONDENSER FAN MOTOR 7 - CIRCUIT 2, BANK A	SHT 7-419
6M18	CONDENSER FAN MOTOR 8 - CIRCUIT 2, BANK B	SHT 7-419
6M19	CONDENSER FAN MOTOR 9 - CIRCUIT 2, BANK A	SHT 7-424
6M20	CONDENSER FAN MOTOR 10 - CIRCUIT 2, BANK B	SHT 7-424
6M25	ELECTRONIC EXPANSION VALVE 1 - CIRCUIT 2	SHT 8-501
6M26	ELECTRONIC EXPANSION VALVE 2 - CIRCUIT 2	SHT 8-504
6M27	OIL RETURN VALVE - COMPRESSOR 2A	SHT 8-507
6X1	OIL SEPARATOR TERMINAL BLOCK - CIRCUIT 2	SHT 8-490
6X2	COMPRESSOR MOTOR ENCLOSURE TERMINAL BLOCK - COMPRESSOR 2B	SHT 5-298
7K1	LIMITED UNIT OPERATION STATUS RELAY (PROGRAMMABLE)	SHT 10-620
7K2	LIMITED UNIT OPERATION STATUS RELAY (PROGRAMMABLE)	SHT 10-621
7K3	MAXIMUM UNIT CAPACITY STATUS RELAY (PROGRAMMABLE)	SHT 10-623
7K4	MAXIMUM UNIT CAPACITY STATUS RELAY (PROGRAMMABLE)	SHT 10-624
7K5	UNIT RUNNING STATUS RELAY (PROGRAMMABLE)	SHT 10-626
7K6	UNIT RUNNING STATUS RELAY (PROGRAMMABLE)	SHT 10-627
7K7	UNIT ALARM STATUS RELAY (PROGRAMMABLE)	SHT 10-629
7K8	UNIT ALARM STATUS RELAY (PROGRAMMABLE)	SHT 10-630
7K9	EVAPORATOR WATER PUMP 1 RELAY	SHT 10-637
7K10	EVAPORATOR WATER PUMP 2 RELAY	SHT 10-640
7K11	EXTERNAL LOCKOUT RELAY - CIRCUIT 1	SHT 10-621
7K12	EXTERNAL LOCKOUT RELAY - CIRCUIT 2	SHT 10-623
7K13	EXTERNAL INPUT RELAY - AUTO STOP	SHT 10-630
7K14	EXTERNAL INPUT RELAY - EMERGENCY STOP	SHT 10-632
7K15	EXTERNAL INPUT RELAY - ICE MAKING CONTROL	SHT 10-639
7K16	EXTERNAL INPUT RELAY - NOISE REDUCTION REQUEST	SHT 10-641
7K17	AUXILIARY CHILLED WATER SETPOINT ENABLE RELAY - CIRCUIT 1 AND 2	SHT 8-461
8Q1	LINE POTENTIAL MAIN CIRCUIT BREAKER - SINGLE POINT POWER OPTION	SHT 2-4
8X1	LINE POTENTIAL MAIN TERMINAL BLOCK - SINGLE POINT POWER OPTION	SHT 2-6

NOTICE

USE COPPER CONDUCTORS ONLY!

FAILURE TO USE COPPER CONDUCTORS COULD RESULT IN EQUIPMENT DAMAGE AS THE EQUIPMENT WAS NOT DESIGNED OR QUALIFIED TO ACCEPT OTHER TYPES OF CONDUCTORS.

AVIS

N'UTILISER QUE DES CONDUCTEURS EN CUIVRE!

L'UTILISATION DE MATÉRIAUX, AUTRES QUE LE CUIVRE, PEUT ENDOMMAGER L'ÉQUIPEMENT, CELUI-CI N'AYANT PAS ÉTÉ CONÇU OU HOMOLOGUÉ POUR ACCEPTER D'AUTRES TYPES DE CONDUCTEURS.

AVISO

¡UTILICE CONDUCTORES DE COBRE SOLAMENTE!

SI NO UTILIZA CONDUCTORES DE COBRE, EL EQUIPO PODRÍA SUFRIR DAÑOS, YA QUE NO HA SIDO DISEÑADO NI CALIFICADO PARA ACEPTAR OTROS TIPOS DE CONDUCTORES.

⚠WARNING

HAZARDOUS VOLTAGE!

DISCONNECT ALL ELECTRIC POWER INCLUDING REMOTE DISCONNECTS AND FOLLOW LOCK OUT AND TAG PROCEDURES BEFORE SERVICING. INSURE THAT ALL MOTOR CAPACITORS HAVE DISCHARGED STORED VOLTAGE. UNITS WITH VARIABLE SPEED DRIVE, REFER TO DRIVE INSTRUCTIONS FOR CAPACITOR DISCHARGE.

FAILURE TO DO THE ABOVE COULD RESULT IN DEATH OR SERIOUS INJURY.

⚠AVERTISSEMENT

TENSION DANGEREUSE!

COUPER TOUTES LES TENSIONS ET OUVRIR LES SECTIONNEURS À DISTANCE, PUIS SUIVRE LES PROCÉDURES DE VERROUILLAGE ET DES ÉTIQUETTES AVANT TOUTE INTERVENTION. VÉRIFIER QUE TOUS LES CONDENSATEURS DES MOTEURS SONT DÉCHARGÉS. DANS LE CAS D'UNITÉS COMPORTANT DES ENTRAÎNEMENTS À VITESSE VARIABLE, SE REPORTER AUX INSTRUCTIONS DE L'ENTRAÎNEMENT POUR DÉCHARGER LES CONDENSATEURS.

UN MANQUEMENT À LA PROCÉDURE CI-DESSUS PEUT ENTRAÎNER DES BLESSURES GRAVES, VOIRE LA MORT.

⚠ADVERTENCIA

¡VOLTAJE PELIGROSO!

DESCONECTE TODA LA ENERGÍA ELÉCTRICA, INCLUSO LAS DESCONEXIONES REMOTAS Y SIGA LOS PROCEDIMIENTOS DE CIERRE Y ETIQUETADO ANTES DE PROCEDER AL SERVICIO. ASEGÚRESE DE QUE TODOS LOS CAPACITORES DEL MOTOR HAYAN DESCARGADO EL VOLTAJE ALMACENADO. PARA LAS UNIDADES CON TRANSMISIÓN DE VELOCIDAD VARIABLE, CONSULTE LAS INSTRUCCIONES PARA LA DESCARGA DEL CONDENSADOR.

NO REALIZAR LO ANTEDICHO PUEDE PROVOCAR LA MUERTE O LESIONES GRAVES.

DEVICE LOCATIONS

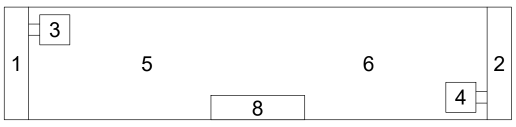

DEVICE PREFIX & LOCATION CODE	
AREA	LOCATION
1	CIRCUIT 1 CONTROL PANEL DEVICES
2	CIRCUIT 2 CONTROL PANEL DEVICES
3	CIRCUIT 1 OPTIONS PANEL DEVICES
4	CIRCUIT 2 OPTIONS PANEL DEVICES
5	CIRCUIT 1 UNIT MOUNTED DEVICES
6	CIRCUIT 2 UNIT MOUNTED DEVICES
7	CUSTOMER PROVIDED DEVICES
8	SINGLE POINT POWER DEVICES

CONDENSER FAN LOCATIONS

375 AND 440 TON UNITS

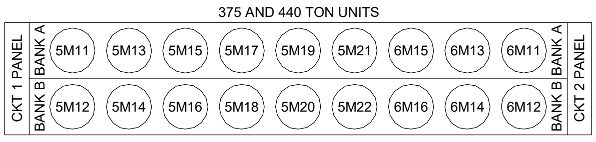

375 AND 440 TON UNITS - WITH OPTIONAL HARMONIC FILTER OR VOLTAGE AUTOTRANSFORMER

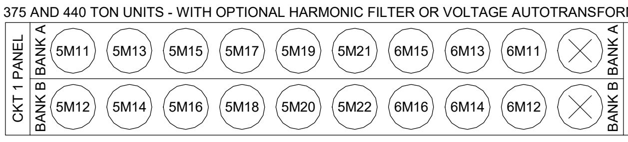

380 AND 450 TON UNITS

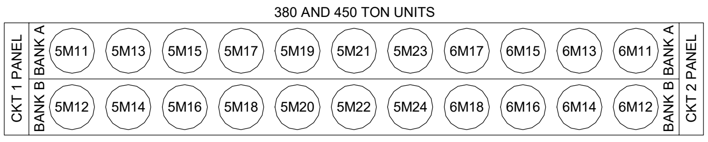

500 AND 550 TON UNITS

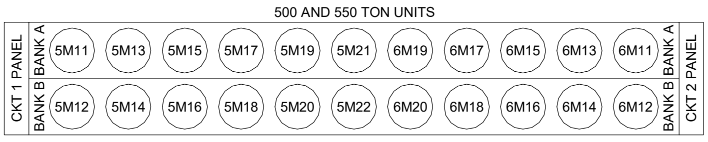

GENERAL NOTES:

1. UNLESS OTHERWISE NOTED ALL SWITCHES ARE SHOWN AT 25°C (77°F), AT ATMOSPHERIC PRESSURE, AT 50% RELATIVE HUMIDITY, WITH ALL POWER REMOVED AND AFTER NORMAL SHUTDOWN HAS OCCURRED.
2. WIRE REPRESENTED BY DASHED LINES INDICATE RECOMMENDED FIELD WIRING BY OTHERS. WIRE REPRESENTED BY SOLID LINES INDICATE FACTIORY INSTALLED WIRING.
3. DASHED LINE ENCLOSED INSETS INDICATE OPTIONAL FACTORY INSTALLED OR CUSTOMER PROVIDED AND INSTALLED COMPONENTS.
4. DEVICE DESIGNATIONS AND LINE NUMBERING ADJACENT TO DEVICES DESIGNATE THE LOCATION OF THE DEVICE CONTACTS.
5. ALL FIELD WIRING MUST BE IN ACCORDANCE WITH THE NATIONAL ELECTRIC CODE (NEC), STATE AND LOCAL CODES.
6. CLASS 1 FIELD WIRING INSULATION RATING IS REQUIRED TO BE EQUAL TO OR BE GREATER THAN THE EQUIPMENT SUPPLY VOLTAGE RATING. CLASS 2 FIELD WIRING INSULATION IS REQUIRED TO BE RATED AT 300V MINIMUM.
7. ALL STANDARD AND OPTIONAL COMPONENTS SHOWN.

DRAWN BY: K.M. KULIG
© TRANE DATE: 16 MAR 2020
MASTER FILE:
REVISION DATE: 24 JUN 2021
REPLACES:
SIMILAR TO:
USED BY:

TRANE®
THIS DRAWING IS PROPRIETARY AND SHALL NOT BE COPIED OR ITS CONTENTS DISCLOSED TO OUTSIDE PARTIES WITHOUT THE WRITTEN CONSENT OF TRANE

CAD: CREO SCHEMATICS

DIAGRAM
SCHEMATIC WIRING

DEVICES, DESCRIPTIONS, LOCATIONS AND NOTES

ACRB 375-550 TON UNIT

DRAWING NUMBER 23115186

REV E

NOTES:

1. ALL UNIT POWER WIRING MUST BE COPPER CONDUCTORS ONLY AND HAVE A MINIMUM INSULATION TEMPERATURE RATING OF 90°C.
2. 1XJ3 CONVENIENCE OUTLET IS NOT AVAILABLE ON 50HZ UNITS.
3. EVAPORATOR HEATER CONTROL TEMPERATURE SWITCH AND IMMERSION HEATERS ARE MANDATORY FOR NON-GLYCOL MEDIUMS. SEE IOM FREEZE AVOIDANCE FOR DETAILS.

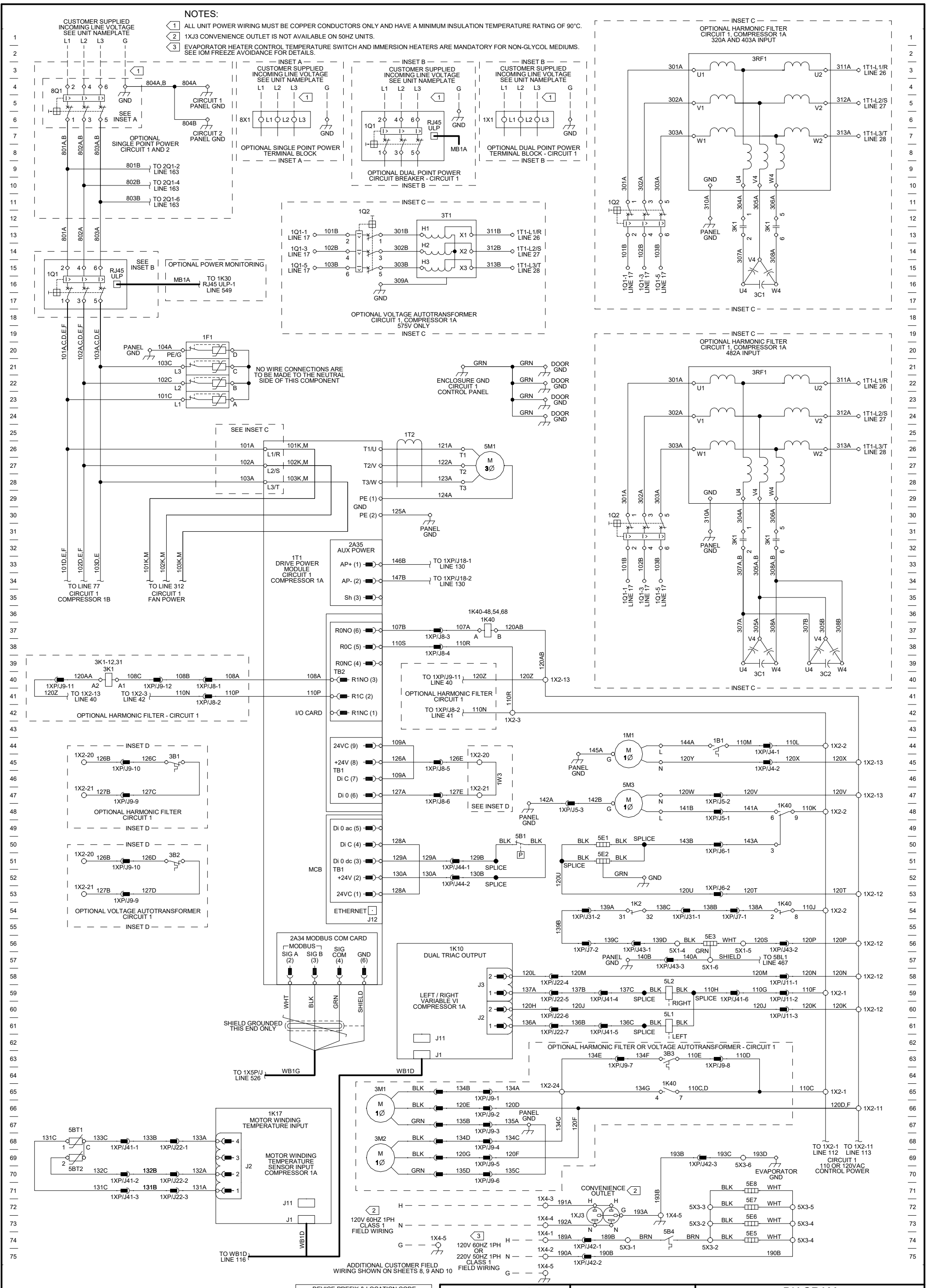

DEVICE PREFIX & LOCATION CODE	
AREA	LOCATION
1	CIRCUIT 1 CONTROL PANEL DEVICES
2	CIRCUIT 2 CONTROL PANEL DEVICES
3	CIRCUIT 1 OPTIONS PANEL DEVICES
4	CIRCUIT 2 OPTIONS PANEL DEVICES
5	CIRCUIT 1 UNIT MOUNTED DEVICES
6	CIRCUIT 2 UNIT MOUNTED DEVICES
7	CUSTOMER PROVIDED DEVICES
8	SINGLE POINT POWER DEVICES

DRAWN BY: K.M. KULIG
© TRANE DATE: 16 MAR 2020
MASTER FILE:
REVISION DATE: 24 JUN 2021
REPLACES:
SIMILAR TO:
USED BY:

TRANE®

THIS DRAWING IS PROPRIETARY AND SHALL NOT BE COPIED OR ITS CONTENTS DISCLOSED TO OUTSIDE PARTIES WITHOUT THE WRITTEN CONSENT OF TRANE

CAD: CREO SCHEMATICS

DIAGRAM SCHEMATIC WIRING

MAIN UNIT DISCONNECT AND DRIVE CIRCUIT 1 - COMPRESSOR 1A

ACRB 375-550 TON UNIT

DRAWING NUMBER 23115186

SHEET 2 OF 10

REV E

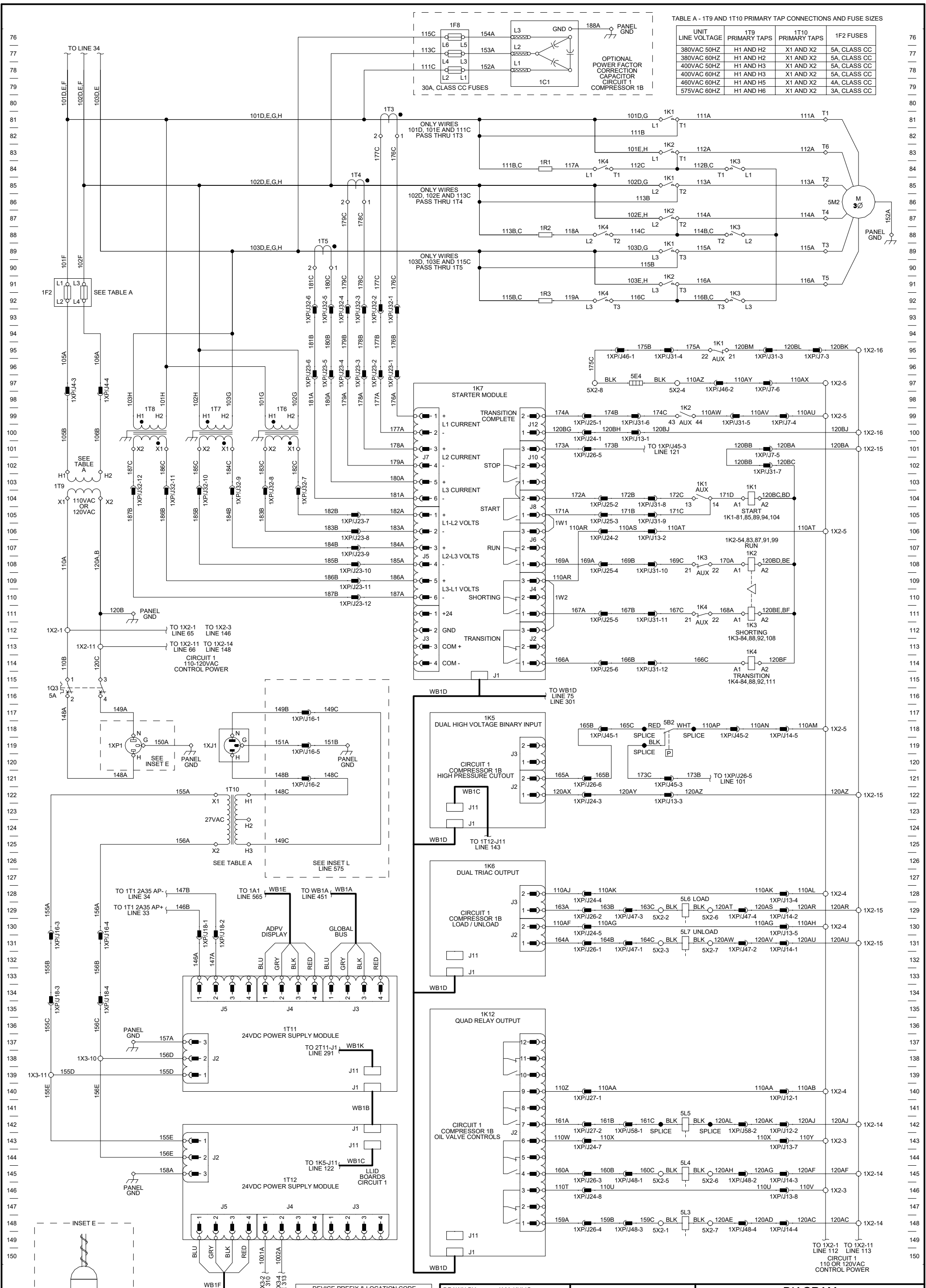

TABLE A - 1T9 AND 1T10 PRIMARY TAP CONNECTIONS AND FUSE SIZES

UNIT LINE VOLTAGE	1T9 PRIMARY TAPS	1T10 PRIMARY TAPS	1F2 FUSES
380VAC 50HZ	H1 AND H2	X1 AND X2	5A, CLASS CC
380VAC 60HZ	H1 AND H2	X1 AND X2	5A, CLASS CC
400VAC 50HZ	H1 AND H3	X1 AND X2	5A, CLASS CC
400VAC 60HZ	H1 AND H3	X1 AND X2	5A, CLASS CC
460VAC 60HZ	H1 AND H5	X1 AND X2	4A, CLASS CC
575VAC 60HZ	H1 AND H6	X1 AND X2	3A, CLASS CC

DEVICE PREFIX & LOCATION CODE

AREA	LOCATION
1	CIRCUIT 1 CONTROL PANEL DEVICES
2	CIRCUIT 2 CONTROL PANEL DEVICES
3	CIRCUIT 1 OPTIONS PANEL DEVICES
4	CIRCUIT 2 OPTIONS PANEL DEVICES
5	CIRCUIT 1 UNIT MOUNTED DEVICES
6	CIRCUIT 2 UNIT MOUNTED DEVICES
7	CUSTOMER PROVIDED DEVICES
8	SINGLE POINT POWER DEVICES

DRAWN BY: K.M. KULIG
© TRANE DATE: 16 MAR 2020
MASTER FILE:
REVISION DATE: 24 JUN 2021
REPLACES:
SIMILAR TO:
USED BY:

TRANE®

THIS DRAWING IS PROPRIETARY AND SHALL NOT BE COPIED OR ITS CONTENTS DISCLOSED TO OUTSIDE PARTIES WITHOUT THE WRITTEN CONSENT OF TRANE

CAD: CREO SCHEMATICS

DIAGRAM SCHEMATIC WIRING

STARTER CIRCUIT 1 - COMPRESSOR 1B

ACRB 375-550 TON UNIT

DRAWING NUMBER 23115186

SHEET 3 OF 10

REV E

NOTE:

1 ALL UNIT POWER WIRING MUST BE COPPER CONDUCTORS ONLY AND HAVE A MINIMUM INSULATION TEMPERATURE RATING OF 90°C.

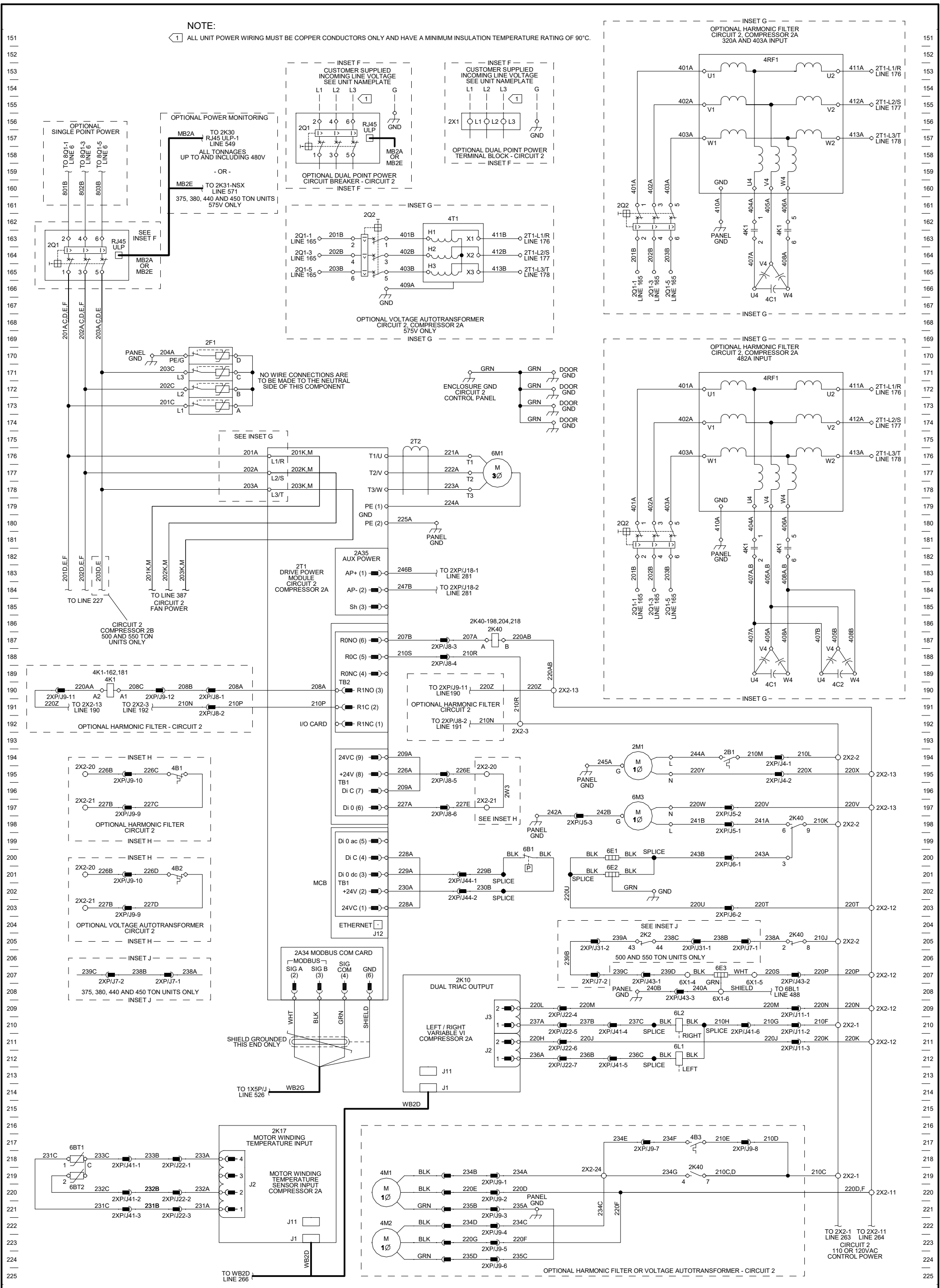

DEVICE PREFIX & LOCATION CODE	
AREA	LOCATION
1	CIRCUIT 1 CONTROL PANEL DEVICES
2	CIRCUIT 2 CONTROL PANEL DEVICES
3	CIRCUIT 1 OPTIONS PANEL DEVICES
4	CIRCUIT 2 OPTIONS PANEL DEVICES
5	CIRCUIT 1 UNIT MOUNTED DEVICES
6	CIRCUIT 2 UNIT MOUNTED DEVICES
7	CUSTOMER PROVIDED DEVICES
8	SINGLE POINT POWER DEVICES

DRAWN BY: K.M. KULIG
© TRANE DATE: 16 MAR 2020
MASTER FILE:
REVISION DATE: 24 JUN 2021
REPLACES:
SIMILAR TO:
USED BY:

TRANE®

THIS DRAWING IS PROPRIETARY AND SHALL NOT BE COPIED OR ITS CONTENTS DISCLOSED TO OUTSIDE PARTIES WITHOUT THE WRITTEN CONSENT OF TRANE

CAD: CREO SCHEMATICS

DIAGRAM SCHEMATIC WIRING

DRIVE CIRCUIT 2 - COMPRESSOR 2A

ACRB 375-550 TON UNIT

DRAWING NUMBER 23115186

SHEET 4 OF 10

REV E

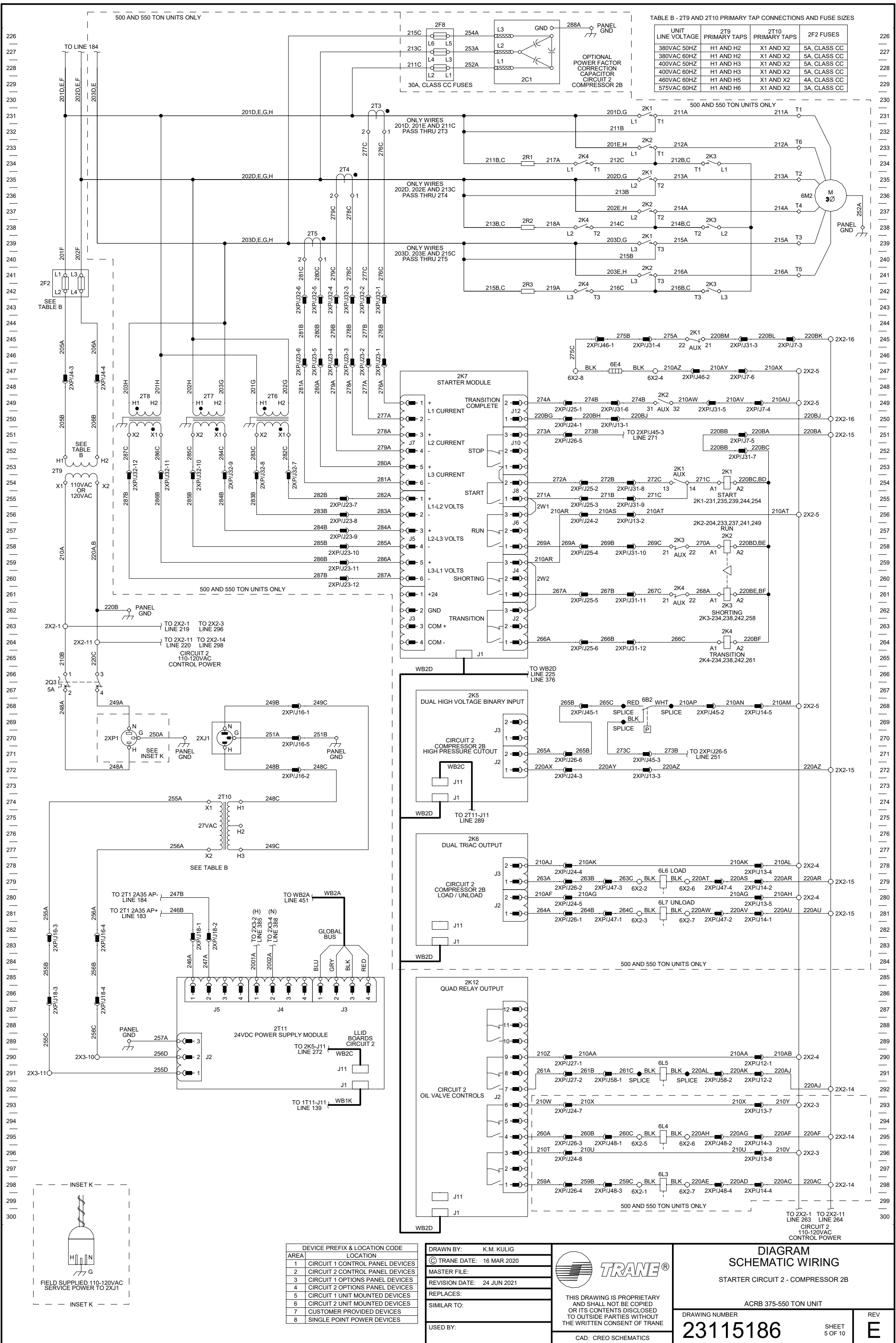

TABLE B - 2T9 AND 2T10 PRIMARY TAP CONNECTIONS AND FUSE SIZES

UNIT LINE VOLTAGE	2T9 PRIMARY TAPS	2T10 PRIMARY TAPS	2F2 FUSES
380VAC 50HZ	H1 AND H2	X1 AND X2	5A, CLASS CC
380VAC 60HZ	H1 AND H2	X1 AND X2	5A, CLASS CC
400VAC 50HZ	H1 AND H3	X1 AND X2	5A, CLASS CC
400VAC 60HZ	H1 AND H3	X1 AND X2	5A, CLASS CC
460VAC 60HZ	H1 AND H5	X1 AND X2	4A, CLASS CC
575VAC 60HZ	H1 AND H6	X1 AND X2	3A, CLASS CC

DEVICE PREFIX & LOCATION CODE

AREA	LOCATION
1	CIRCUIT 1 CONTROL PANEL DEVICES
2	CIRCUIT 2 CONTROL PANEL DEVICES
3	CIRCUIT 1 OPTIONS PANEL DEVICES
4	CIRCUIT 2 OPTIONS PANEL DEVICES
5	CIRCUIT 1 UNIT MOUNTED DEVICES
6	CIRCUIT 2 UNIT MOUNTED DEVICES
7	CUSTOMER PROVIDED DEVICES
8	SINGLE POINT POWER DEVICES

DRAWN BY: K.M. KULIG
© TRANE DATE: 16 MAR 2020
MASTER FILE:
REVISION DATE: 24 JUN 2021
REPLACES:
SIMILAR TO:
USED BY:

TRANE®

THIS DRAWING IS PROPRIETARY AND SHALL NOT BE COPIED OR ITS CONTENTS DISCLOSED TO OUTSIDE PARTIES WITHOUT THE WRITTEN CONSENT OF TRANE

CAD: CREO SCHEMATICS

DIAGRAM SCHEMATIC WIRING

STARTER CIRCUIT 2 - COMPRESSOR 2B

ACRB 375-550 TON UNIT

DRAWING NUMBER 23115186

SHEET 5 OF 10

REV E

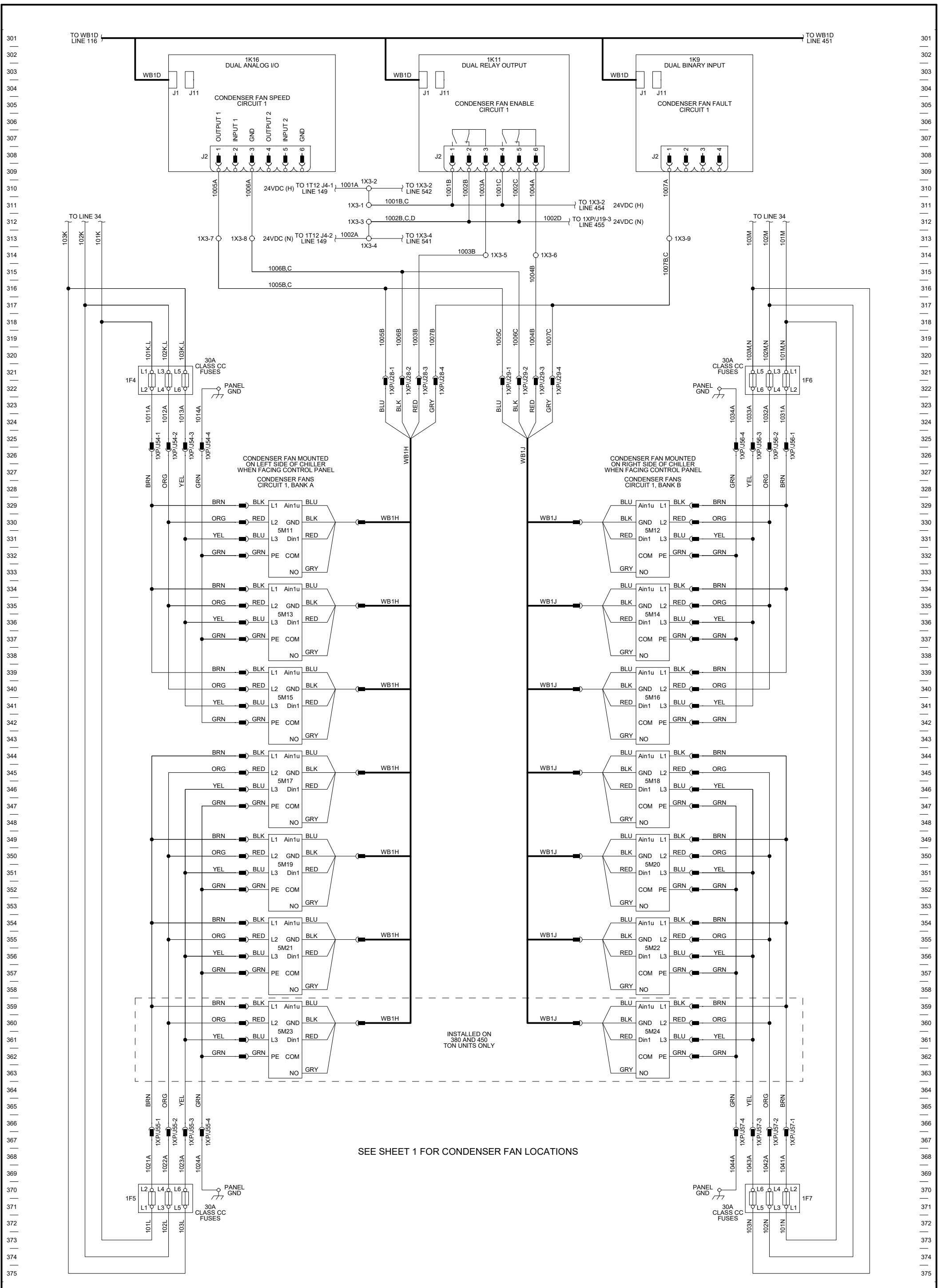

DEVICE PREFIX & LOCATION CODE	
AREA	LOCATION
1	CIRCUIT 1 CONTROL PANEL DEVICES
2	CIRCUIT 2 CONTROL PANEL DEVICES
3	CIRCUIT 1 OPTIONS PANEL DEVICES
4	CIRCUIT 2 OPTIONS PANEL DEVICES
5	CIRCUIT 1 UNIT MOUNTED DEVICES
6	CIRCUIT 2 UNIT MOUNTED DEVICES
7	CUSTOMER PROVIDED DEVICES
8	SINGLE POINT POWER DEVICES

DRAWN BY: K.M. KULIG
© TRANE DATE: 16 MAR 2020
MASTER FILE:
REVISION DATE: 24 JUN 2021
REPLACES:
SIMILAR TO:
USED BY:

TRANE®

THIS DRAWING IS PROPRIETARY AND SHALL NOT BE COPIED OR ITS CONTENTS DISCLOSED TO OUTSIDE PARTIES WITHOUT THE WRITTEN CONSENT OF TRANE

CAD: CREO SCHEMATICS

DIAGRAM SCHEMATIC WIRING

CONDENSER FANS AND CONTROLS CIRCUIT 1

ACRB 375-550 TON UNIT

DRAWING NUMBER 23115186

SHEET 6 OF 10

REV E

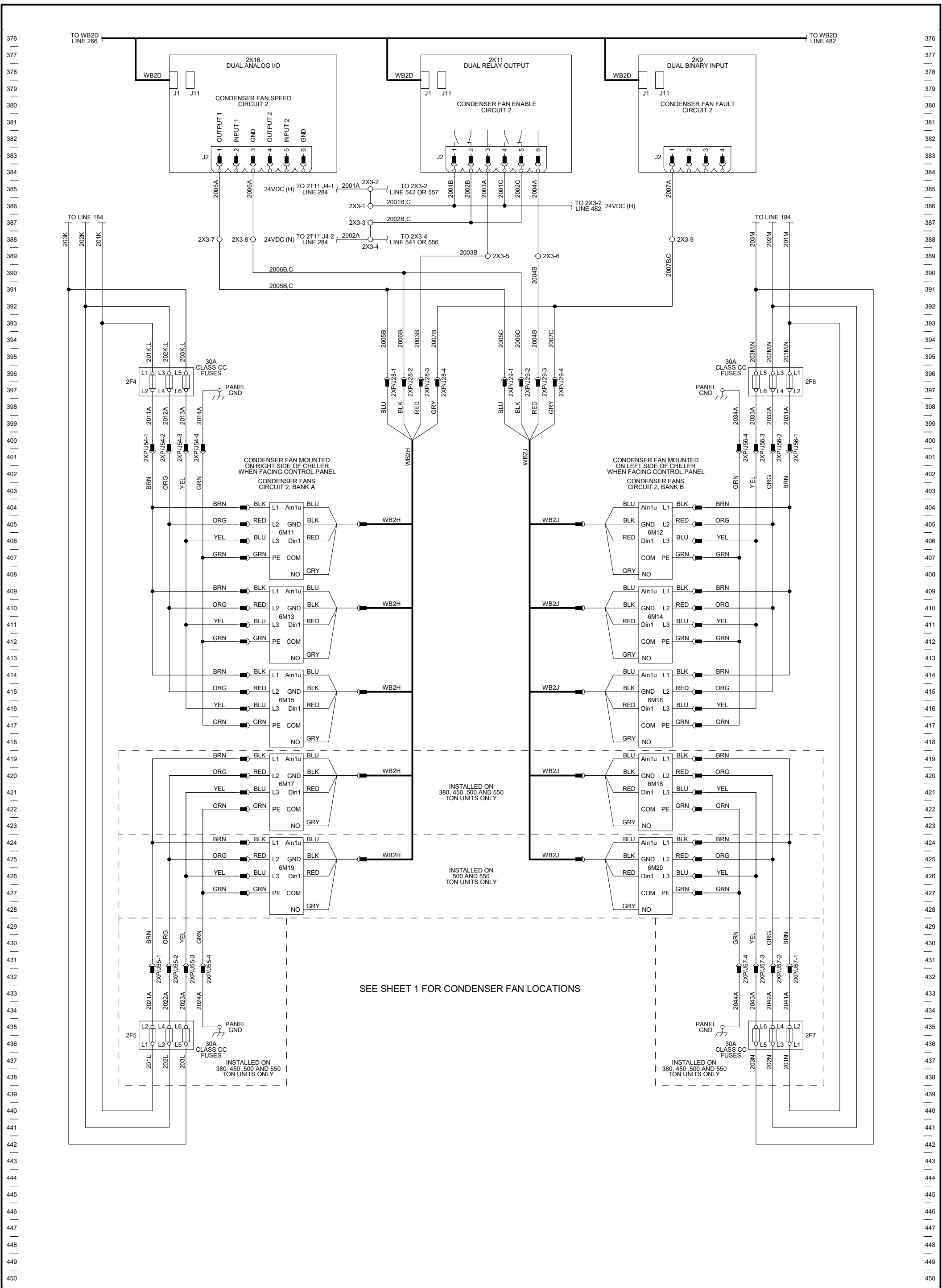

DEVICE PREFIX & LOCATION CODE	
AREA	LOCATION
1	CIRCUIT 1 CONTROL PANEL DEVICES
2	CIRCUIT 2 CONTROL PANEL DEVICES
3	CIRCUIT 1 OPTIONS PANEL DEVICES
4	CIRCUIT 2 OPTIONS PANEL DEVICES
5	CIRCUIT 1 UNIT MOUNTED DEVICES
6	CIRCUIT 2 UNIT MOUNTED DEVICES
7	CUSTOMER PROVIDED DEVICES
8	SINGLE POINT POWER DEVICES

DRAWN BY: K.M. KULIG
© TRANE DATE: 16 MAR 2020
MASTER FILE:
REVISION DATE: 24 JUN 2021
REPLACES:
SIMILAR TO:
USED BY:

TRANE®

THIS DRAWING IS PROPRIETARY AND SHALL NOT BE COPIED OR ITS CONTENTS DISCLOSED TO OUTSIDE PARTIES WITHOUT THE WRITTEN CONSENT OF TRANE

CAD: CREO SCHEMATICS

DIAGRAM SCHEMATIC WIRING

CONDENSER FANS AND CONTROLS CIRCUIT 2

ACRB 375-550 TON UNIT

DRAWING NUMBER 23115186

SHEET 7 OF 10

REV E

NOTES:

1. DO NOT WIRE SHIELD TO GROUND IN THE JUNCTION BOX. SHIELD IS ATTACHED INTERNALLY TO GROUND AT THE SENSOR.
2. CUSTOMER SUPPLIED CONTACTS FOR ALL LOW VOLTAGE CONNECTIONS MUST BE COMPATABLE WITH DRY CIRCUIT 24VDC FOR A 12mA RESISTIVE LOAD. GOLD PLATED CONTACTS ARE RECOMMENDED.

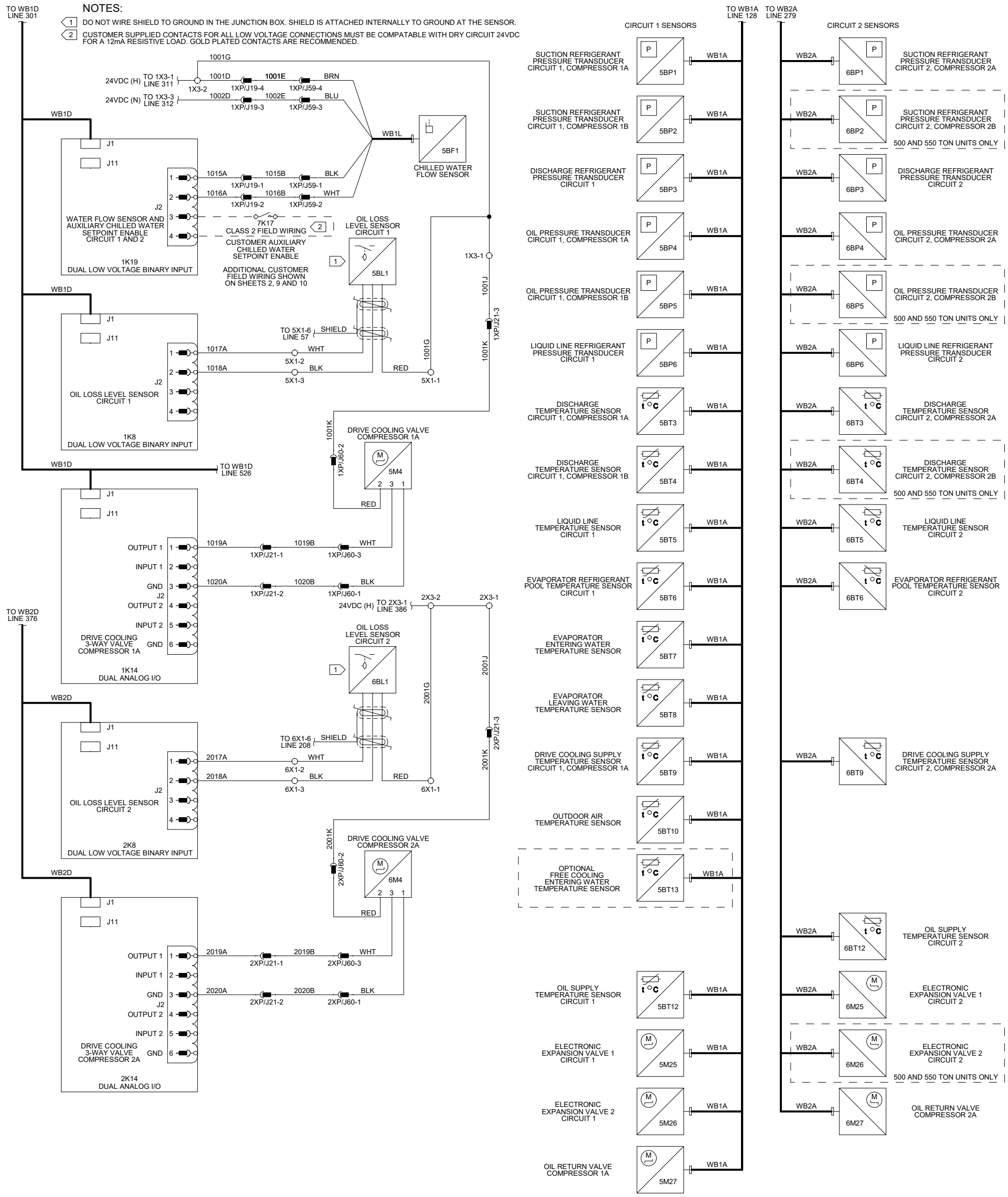

DEVICE PREFIX & LOCATION CODE	
AREA	LOCATION
1	CIRCUIT 1 CONTROL PANEL DEVICES
2	CIRCUIT 2 CONTROL PANEL DEVICES
3	CIRCUIT 1 OPTIONS PANEL DEVICES
4	CIRCUIT 2 OPTIONS PANEL DEVICES
5	CIRCUIT 1 UNIT MOUNTED DEVICES
6	CIRCUIT 2 UNIT MOUNTED DEVICES
7	CUSTOMER PROVIDED DEVICES
8	SINGLE POINT POWER DEVICES

DRAWN BY: K.M. KULIG
© TRANE DATE: 16 MAR 2020
MASTER FILE:
REVISION DATE: 24 JUN 2021
REPLACES:
SIMILAR TO:
USED BY:

TRANE®

THIS DRAWING IS PROPRIETARY AND SHALL NOT BE COPIED OR ITS CONTENTS DISCLOSED TO OUTSIDE PARTIES WITHOUT THE WRITTEN CONSENT OF TRANE

CAD: CREO SCHEMATICS

DIAGRAM SCHEMATIC WIRING

UNIT CONTROLS AND SENSORS CIRCUIT 1 AND 2

ACRB 375-550 TON UNIT

DRAWING NUMBER 23115186

SHEET 8 OF 10

REV E

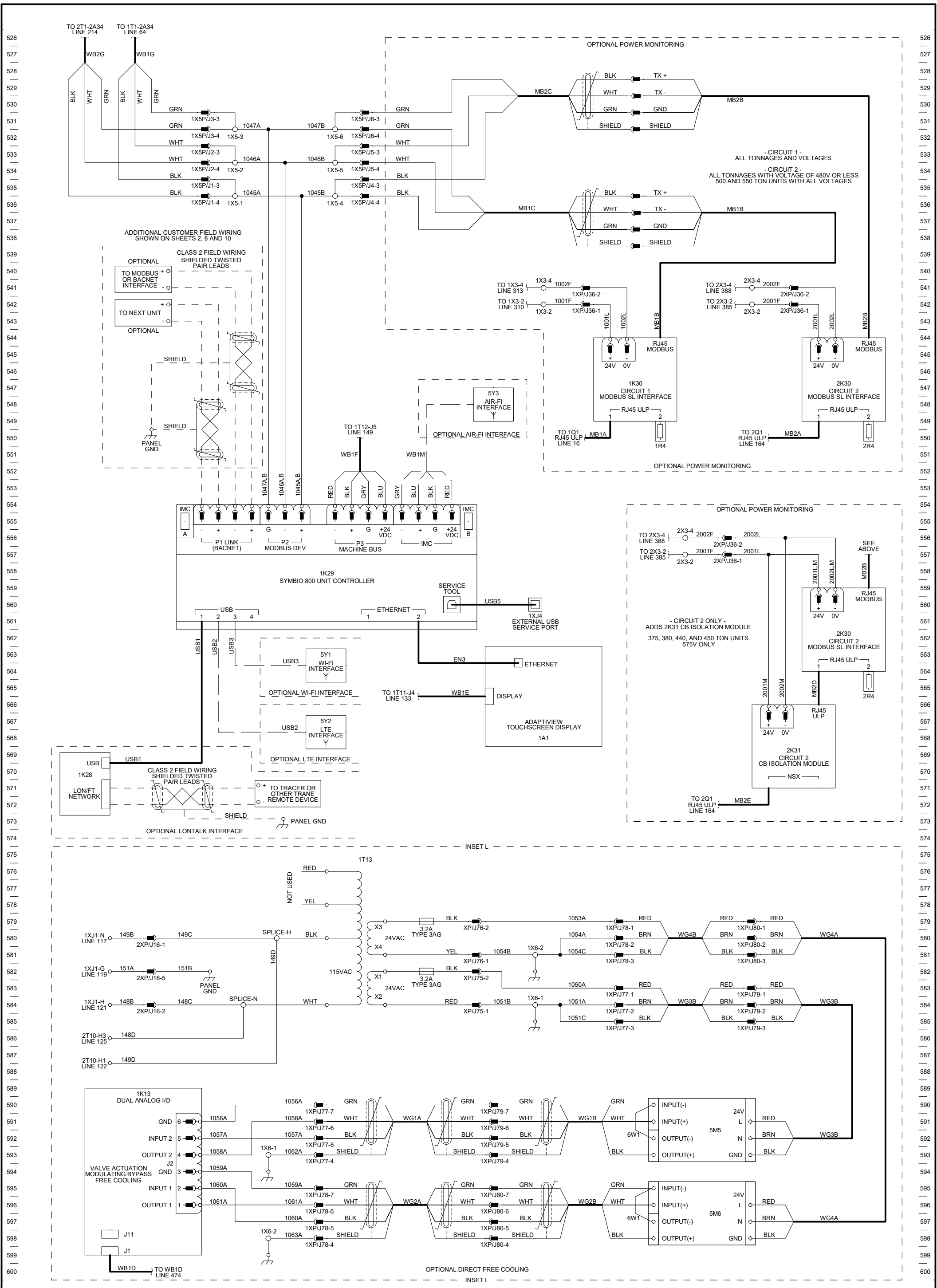

DEVICE PREFIX & LOCATION CODE	
AREA	LOCATION
1	CIRCUIT 1 CONTROL PANEL DEVICES
2	CIRCUIT 2 CONTROL PANEL DEVICES
3	CIRCUIT 1 OPTIONS PANEL DEVICES
4	CIRCUIT 2 OPTIONS PANEL DEVICES
5	CIRCUIT 1 UNIT MOUNTED DEVICES
6	CIRCUIT 2 UNIT MOUNTED DEVICES
7	CUSTOMER PROVIDED DEVICES
8	SINGLE POINT POWER DEVICES

DRAWN BY: K.M. KULIG
© TRANE DATE: 16 MAR 2020
MASTER FILE:
REVISION DATE: 24 JUN 2021
REPLACES:
SIMILAR TO:
USED BY:

TRANE®

THIS DRAWING IS PROPRIETARY AND SHALL NOT BE COPIED OR ITS CONTENTS DISCLOSED TO OUTSIDE PARTIES WITHOUT THE WRITTEN CONSENT OF TRANE

CAD: CREO SCHEMATICS

DIAGRAM SCHEMATIC WIRING

UNIT CONTROLS AND SENSORS
CIRCUIT 1 AND 2

ACRB 375-550 TON UNIT

DRAWING NUMBER 23115186
SHEET 9 OF 10
REV E

RELEASED 01/Jul/2021 13:46:12 GMT

NOTES:

1. UNIT PROVIDED DRY CONTACTS FOR THE EVAPORATOR CHILLED WATER PUMP CONTROLS AND PROGRAMMABLE UNIT STATUS RELAYS. CONTACT RATINGS AT 120VAC: 7.2A RESISTIVE, 2.88A PILOT DUTY, OR 1/3 HP, 7.2 FLA. CONTACTS ARE RATED FOR 240VAC, 5A GENERAL PURPOSE DUTY.
2. CUSTOMER SUPPLIED CONTACTS FOR ALL LOW VOLTAGE CONNECTIONS MUST BE COMPATABLE WITH DRY CIRCUIT 24VDC FOR A 12mA RESISTIVE LOAD. GOLD PLATED CONTACTS ARE RECOMMENDED.
3. CAUTION - TRANE PROVIDED 1K20 MUST BE USED TO PROVIDE EVAPORATOR WATER PUMP CONTROL. EVAPORATOR WATER PUMP(S) MUST BE CONTROLLED BY THE CHILLER OUTPUT. FAILURE TO COMPLY WITH THIS REQUIREMENT MAY RESULT IN DAMAGE TO THE UNIT. SEE INSTALLATION, OPERATION AND MAINTENANCE MANUAL FOR ADDITIONAL DETAILS.
4. ALL CUSTOMER SUPPLIED CONTROL CIRCUIT WIRING MUST BE COPPER CONDUCTORS ONLY AND HAVE A MINIMUM INSULATION RATING OF 300V. EXCEPT AS NOTED, ALL CUSTOMER WIRING CONNECTIONS ARE MADE TO CIRCUIT BOARD MOUNTED BOX LUGS WITH A WIRE RANGE OF 14 TO 18 AWG.
5. ADDITIONAL CUSTOMER FIELD WIRING SHOWN ON SHEETS 2, 8 AND 9.

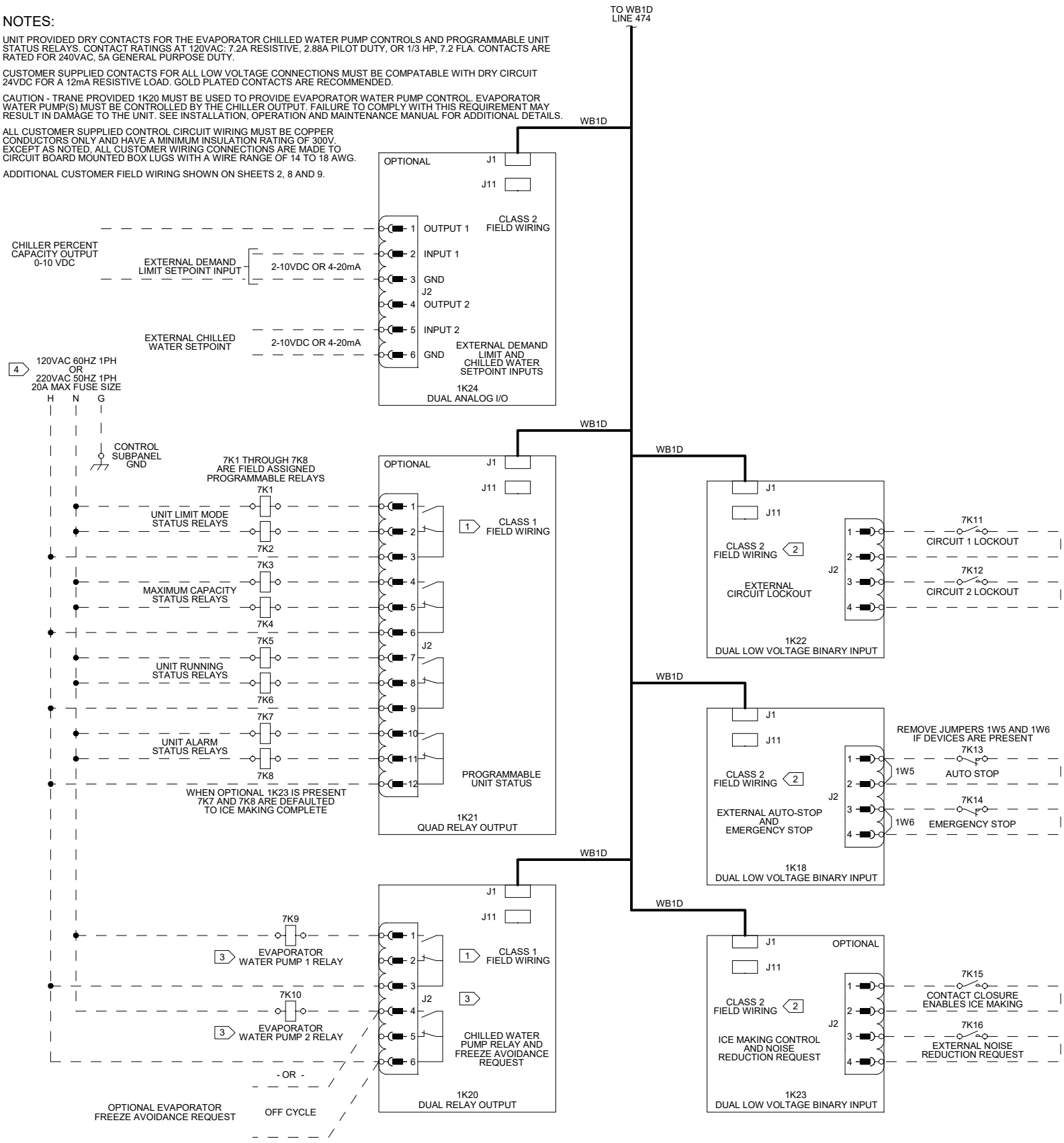

DEVICE PREFIX & LOCATION CODE	
AREA	LOCATION
1	CIRCUIT 1 CONTROL PANEL DEVICES
2	CIRCUIT 2 CONTROL PANEL DEVICES
3	CIRCUIT 1 OPTIONS PANEL DEVICES
4	CIRCUIT 2 OPTIONS PANEL DEVICES
5	CIRCUIT 1 UNIT MOUNTED DEVICES
6	CIRCUIT 2 UNIT MOUNTED DEVICES
7	CUSTOMER PROVIDED DEVICES
8	SINGLE POINT POWER DEVICES

DRAWN BY: K.M. KULIG
© TRANE DATE: 16 MAR 2020
MASTER FILE:
REVISION DATE: 24 JUN 2021
REPLACES:
SIMILAR TO:
USED BY:

TRANE®

THIS DRAWING IS PROPRIETARY AND SHALL NOT BE COPIED OR ITS CONTENTS DISCLOSED TO OUTSIDE PARTIES WITHOUT THE WRITTEN CONSENT OF TRANE

CAD: CREO SCHEMATICS

DIAGRAM
SCHEMATIC WIRING

CUSTOMER FIELD WIRING

ACRB 375-550 TON UNIT

DRAWING NUMBER 23115186

SHEET 10 OF 10

REV E