UNLESS OTHERWISE SPECIFIED ALL DIMENSIONS ARE IN INCHES. TOLERANCE:
.X = ± .06
.XX = ± .03
.XXX = ± .015
ANGLES = ± 1
FINISH ✓
HOLE DIA = +.005 -.005
CONFORMS TO ASME Y14.5M - 1994

TRANE

THIS DRAWING IS PROPRIETARY AND SHALL NOT BE COPIED OR ITS CONTENTS DISCLOSED TO OUTSIDE PARTIES WITHOUT THE WRITTEN CONSENT OF TRANE

DRAWN BY: SPAINHOUR
© TRANE DATE: 7-APR-2017

DO NOT SCALE PRINT

THIRD ANGLE PROJECTION

2311-4621 SHEET 1 OF 1 REV A

SCHEMATIC; HUV
TRANE FURNISHED CONTROLS
277 VOLT, 1 PH, 2-WIRE
ELECTRIC HEAT (6 EL) UNIT SIZE 1000-2000

⚠ WARNING

HAZARDOUS VOLTAGE!

DISCONNECT ALL ELECTRIC POWER INCLUDING REMOTE DISCONNECTS AND FOLLOW LOCK OUT AND TAG PROCEDURES BEFORE SERVICING. INSURE THAT ALL MOTOR CAPACITORS HAVE DISCHARGED STORED VOLTAGE. UNITS WITH VARIABLE SPEED DRIVE, REFER TO DRIVE INSTRUCTIONS FOR CAPACITOR DISCHARGE.

FAILURE TO DO THE ABOVE COULD RESULT IN DEATH OR SERIOUS INJURY.

⚠ AVERTISSEMENT

TENSION DANGEREUSE!

COUPER TOUTES LES TENSIONS ET OUVRIR LES SECTIONNEURS À DISTANCE, PUIS SUIVRE LES PROCÉDURES DE VERROUILLAGE ET DES ÉTIQUETTES AVANT TOUTE INTERVENTION. VÉRIFIER QUE TOUS LES CONDENSATEURS DES MOTEURS SONT DÉCHARGÉS. DANS LE CAS D'UNITÉS COMPORTANT DES ENTRAÎNEMENTS À VITESSE VARIABLE, SE REPORTER AUX INSTRUCTIONS DE L'ENTRAÎNEMENT POUR DÉCHARGER LES CONDENSATEURS.

NE PAS RESPECTER CES MESURES DE PRÉCAUTION PEUT ENTRAÎNER DES BLESSURES GRAVES POUVANT ÊTRE MORTELLES.

⚠ ADVERTENCIA

¡VOLTAJE PELIGROSO!

DESCONECTE TODA LA ENERGÍA ELÉCTRICA, INCLUSO LAS DESCONEXIONES REMOTAS Y SIGA LOS PROCEDIMIENTOS DE CIERRE Y ETIQUETADO ANTES DE PROCEDER AL SERVICIO. ASEGÚRESE DE QUE TODOS LOS CAPACITORES DEL MOTOR HAYAN DESCARGADO EL VOLTAJE ALMACENADO. PARA LAS UNIDADES CON TRANSMISIÓN DE VELOCIDAD VARIABLE, CONSULTE LAS INSTRUCCIONES PARA LA DESCARGA DEL CONDENSADOR.

EL NO REALIZAR LO ANTERIORMENTE INDICADO, PODRÍA OCASIONAR LA MUERTE O SERIAS LESIONES PERSONALES.

DEVICE PREFIX LOCATION CODE	
AREA	LOCATION
1	LH CONTROL PANEL
2	LH END POCKET
3	AIR SECTION
4	RH END POCKET
5	TOP ACCESS PANEL
6	FIELD INSTALLED
7	RH CONTROL BOX E–HT

NOTICE

USE COPPER CONDUCTORS ONLY!

UNIT TERMINALS ARE NOT DESIGNED TO ACCEPT OTHER TYPES OF CONDUCTORS.

FAILURE TO DO THE ABOVE COULD RESULT IN EQUIPMENT DAMAGE.

AVIS

N'UTILISER QUE DES CONDUCTEURS EN CUIVRE!

LES BORNES DE L'UNITÉ NE SONT PAS CONÇUES POUR RECEVOIR D'AUTRES TYPES DE CONDUCTEURS.

FAIRE DÉFAUT À LA PROCÉDURE CI–DESSUS PEUT ENTRAÎNER DES DOMMAGES À L'ÉQUIPEMENT.

AVISO

¡UTILICE ÚNICAMENTE CONDUCTORES DE COBRE!

LAS TERMINALES DE LA UNIDAD NO ESTÁN DISEÑADAS PARA ACEPTAR OTROS TIPOS DE CONDUCTORES.

NO SEGUIR LAS INSTRUCCIONES ANTERIORES PUEDE PROVOCAR DAÑOS EN EL EQUIPO.

NOTES:

1. UNLESS OTHERWISE NOTED, ALL SWITCHES ARE SHOWN AT 25° C (77° F), AT ATMOSPHERIC PRESSURE, AT 50% RELATIVE HUMIDITY, WITH ALL UTILITIES TURNED OFF, AND AFTER A NORMAL SHUTDOWN HAS OCCURED.
2. DASHED LINES INDICATE RECOMMENDED FIELD WIRING BY OTHERS. DASHED LINE ENCLOSURES AND/OR DASHED DEVICE OUTLINES INDICATE COMPONENTS PROVIDED BY THE FIELD. SOLID LINES INDICATE WIRING BY TRANE.
3. ALL FIELD WIRING MUST BE IN ACCORDANCE WITH THE NATIONAL ELECTRIC CODE (NEC), STATE AND LOCAL CODES.
4. FIELD POWER SUPPLY CONDUCTORS MUST HAVE MINIMUM 90C INSULATION.
5. WIRING IS SHOWN WITH CIRCUIT BREAKER OPTION. SEE INSET "A" FOR UNITS WITHOUT CIRCUIT BREAKER.
6. FUSE 7F8 IS INCLUDED WITH 208V AND 240V UNITS ONLY. FUSE 7F8 IS NOT USED FOR 277V UNITS.

ELECTRIC HEAT ELEMENT FUSE CLASS G–480V (7F1 THRU 7F3)							
UNIT CFM	NUMBER OF ELEMENTS	208V 1PH FUSE AMPS	240V 1PH FUSE AMPS	277V 1PH FUSE AMPS	208V 3PH FUSE AMPS	240V 3PH FUSE AMPS	460V 3PH FUSE AMPS
750	3	–	–	–	–	–	–
	4	–	–	–	–	–	–
	6	–	20	–	–	–	–
1000	3	–	–	–	–	–	–
	4	35	30	–	–	–	–
	6	–	30	25	35	25	25
1250	3	40	–	–	–	–	–
	4	40	35	30	40	–	–
	6	–	35	30	40	35	–
1500	3	45	40	–	–	–	–
	4	45	40	35	45	40	–
	6	–	40	35	45	40	–
2000	3	45	40	–	–	–	–
	4	45	40	35	45	40	–
	6	–	40	35	45	40	20

BLOWER MOTOR FUSE (7F7 & 7F8)
CLASS LP–CC 600V
15A

VOLTAGE	UNIT SIZE
277	1000, 1250, 1500, 2000

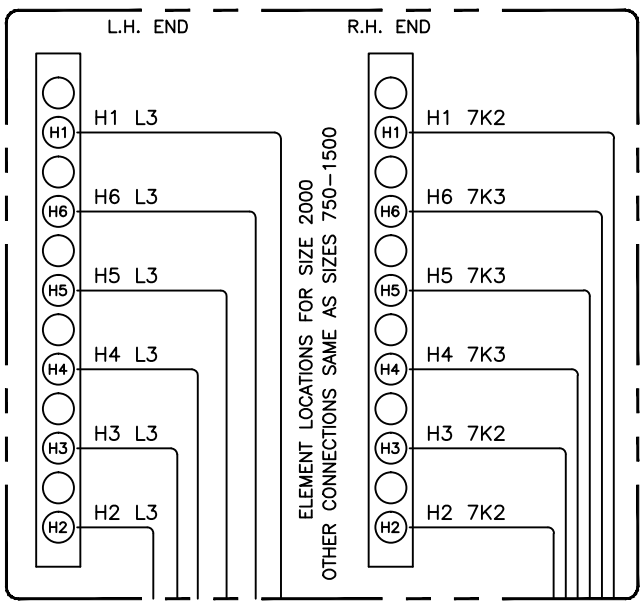

INSET "B"
SIZE 2000 COIL

SIZE 1000–1500 COIL
(SEE INSET "B" FOR SIZE 2000)

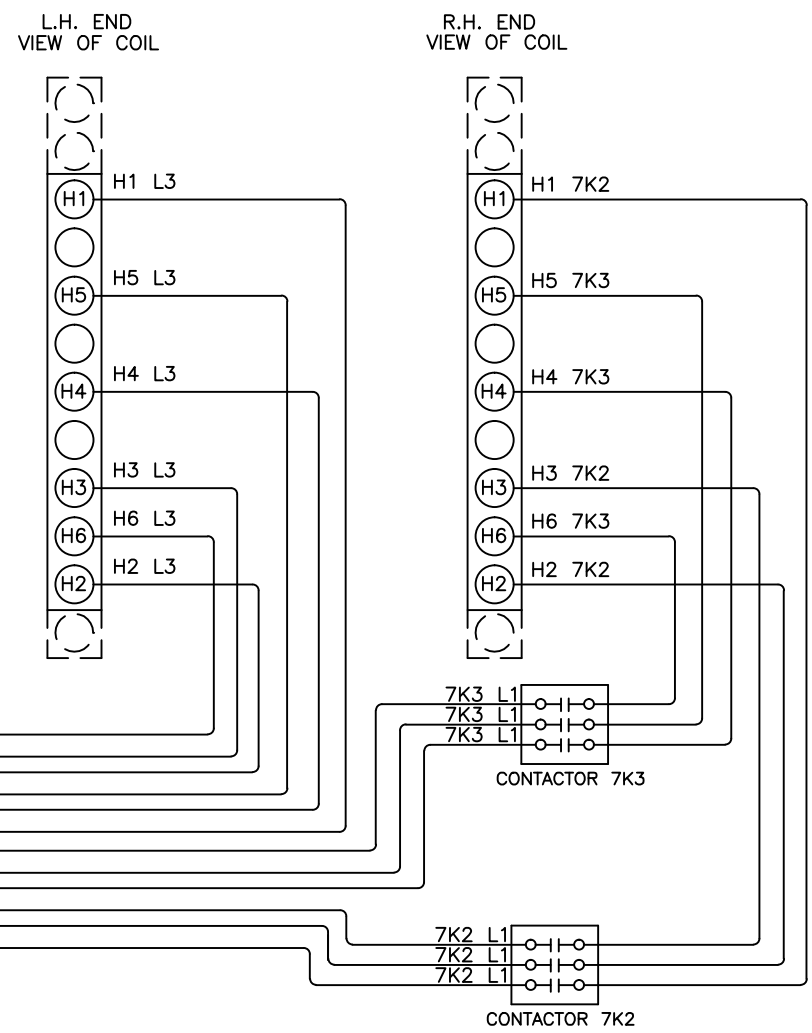

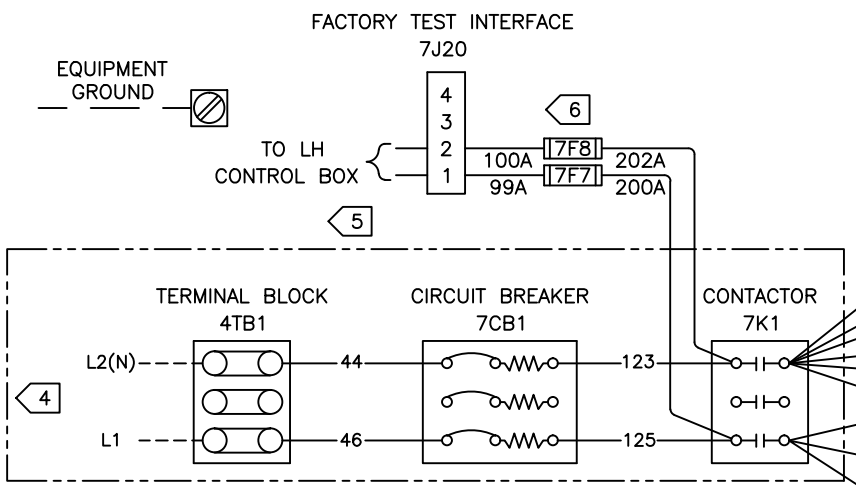

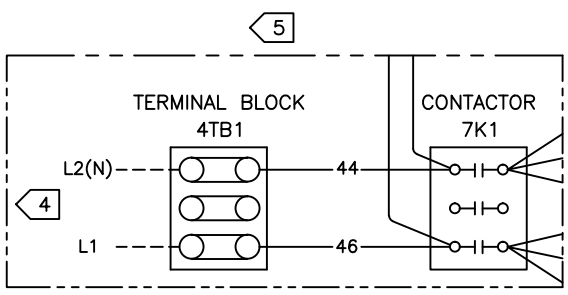

INSET "A"
WITHOUT CIRCUIT BREAKER