| LEGEND | | |
|---|---|---|
| REF DES | DESCRIPTION | LINE NO |
| 1KF1 | UNIT CONTROLS MODULE (UCM) | 170 |
| 1KF27 | LON INTERFACE | 178 |
| 1KF32 | MODULE - EXPANSION | 122 |
| 1PG1 | POWER METER | 155 |
| 1TB3 | COMPRESSOR VFD | 135 |
| 1TB4 | CONDENSER FAN VFD CIRCUIT 1 | 156 |
| 1TB5 | CONDENSER FAN VFD CIRCUIT 2 | 155 |
| 2P1 | USER INTERFACE | 177 |
| 2QM18 | SOLENOID - OIL | 136 |
| 2S4 | SWITCH - HIGH PRESSURE CUTOUT VSC | 139 |
| 2Y1 | ANTENNA, WI-FI | 177 |
| 4LDS1 | LEAK DETECTION SENSOR | 165 |
| 6FC1 | OVERLOAD - SUPPLY FAN #1 | 148 |
| 6FC2 | OVERLOAD - SUPPLY FAN #2 | 148 |
| 6KF29 | AIR-FI COMM INTERFACE | 173 |
| 6TB1 | SUPPLY FAN VFD #1 | 147 |
| 6TB2 | SUPPLY FAN VFD #2 | 155 |
| 6TB6 | RELIEF/RETURN FAN VFD | 155 |

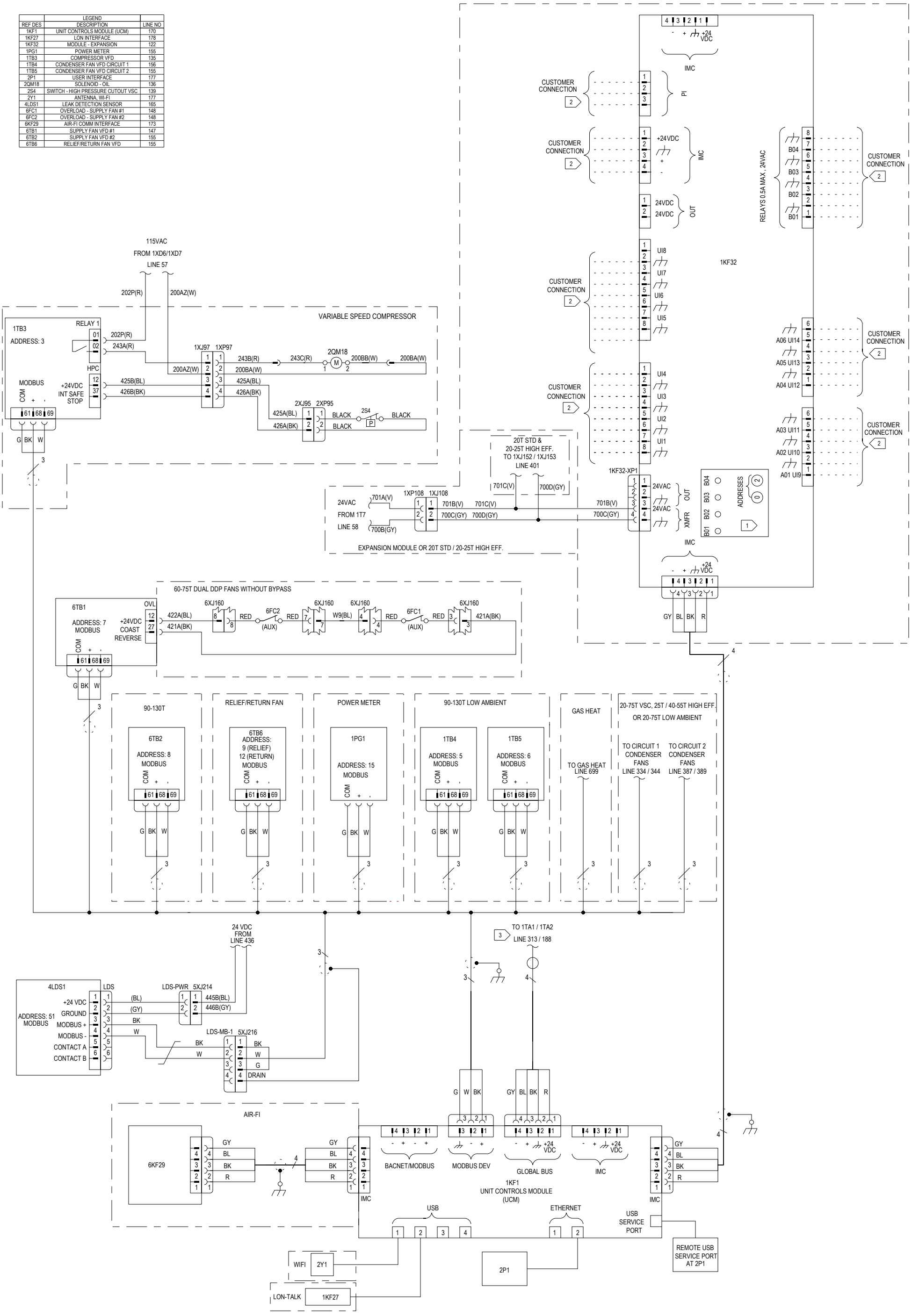


NOTES:

1. 1KF32 ADDRESS DIALS MUST BE SET TO "02".
2. CUSTOMER PROVIDED DRY CONTACTS SHOULD BE RATED FOR 5VDC / 5mA CONTROL CIRCUIT. USE CLASS 2 CIRCUIT ONLY.
3. FOR 20-75T UNITS, REFER TO 1TA1 ON LINE 313. FOR 90-130T UNITS, REFER TO 1TA2 ON LINE 188.

| | |
|---|---|
| DESIGNER: | T.PEED |
| ENGINEER: | R. ROBINSON |
| TRANE © DATE: | 12/5/2023 |
| REPLACES: | |
| SIMILAR TO: | |
| REVISION DATE: | 12-JUL-2024 |
| REVISED BY: | J. ACOSTA |
| APPROVED BY: | R. ROBINSON |
| CAD SYSTEM USED: | CREO SCHEMATICS |

**TRANE ®**

THIS DRAWING IS PROPRIETARY AND SHALL NOT BE COPIED OR ITS CONTENTS DISCLOSED TO OUTSIDE PARTIES WITHOUT THE WRITTEN CONSENT OF TRANE.

IPAK 1
CONTROLS SCHEMATIC
20-130T
UNIT CONTROLS

| MASTER NUMBER: | DRAWING NUMBER: | SHEET: | REV |
|---|---|---|---|
| | 12134929 | 3 OF 17 | E |