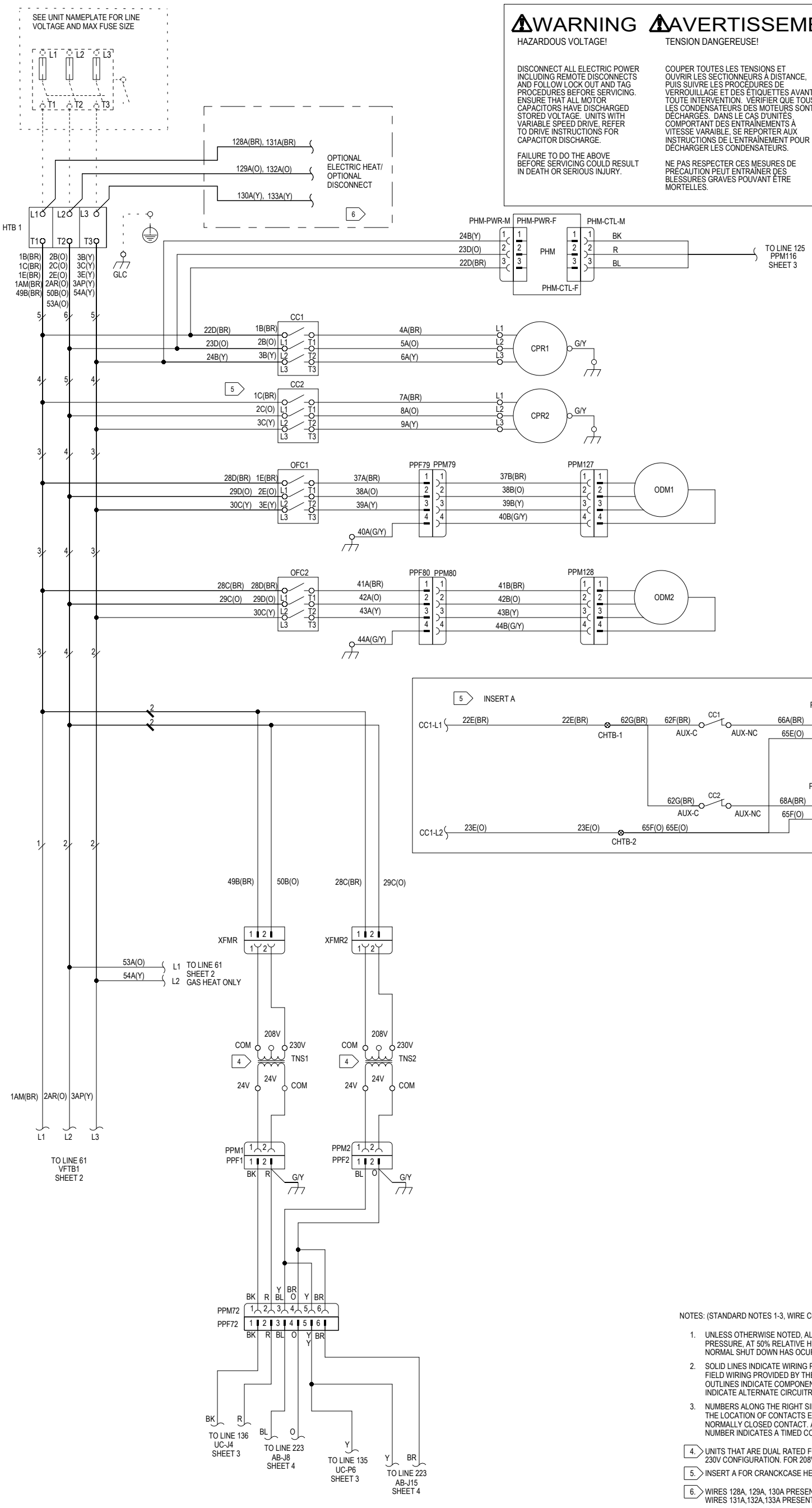

⚠WARNING

HAZARDOUS VOLTAGE!

DISCONNECT ALL ELECTRIC POWER INCLUDING REMOTE DISCONNECTS AND FOLLOW LOCK OUT AND TAG PROCEDURES BEFORE SERVICING. ENSURE THAT ALL MOTOR CAPACITORS HAVE DISCHARGED STORED VOLTAGE. UNITS WITH VARIABLE SPEED DRIVE, REFER TO DRIVE INSTRUCTIONS FOR CAPACITOR DISCHARGE.

FAILURE TO DO THE ABOVE BEFORE SERVICING COULD RESULT IN DEATH OR SERIOUS INJURY.

⚠AVERTISSEMENT

TENSION DANGEREUSE!

COUPER TOUTES LES TENSIONS ET OUVRIR LES SECTIONNEURS À DISTANCE, PUIS SUIVRE LES PROCÉDURES DE VERROUILLAGE ET DES ÉTIQUETTES AVANT TOUTE INTERVENTION. VÉRIFIER QUE TOUS LES CONDENSATEURS DES MOTEURS SONT DÉCHARGÉS. DANS LE CAS D'UNITÉS COMPORTANT DES ENTRAÎNEMENTS À VITESSE VARAIBLE, SE REPORTER AUX INSTRUCTIONS DE L'ENTRAÎNEMENT POUR DÉCHARGER LES CONDENSATEURS.

NE PAS RESPECTER CES MESURES DE PRÉCAUTION PEUT ENTRAÎNER DES BLESSURES GRAVES POUVANT ÊTRE MORTELLES.

⚠ADVERTENCIA

¡VOLTAJE PELIGROSO!

DESCONECTE TODA LA ENERGÍA ELÉCTRICA, INCLUSO LAS DESCONEXIONES REMOTAS Y SIGA LOS PROCEDIMIENTOS DE CIERRE Y ETIQUETADO ANTES DE PROCEDER AL SERVICIO. ASEGÚRESE DE QUE TODOS LOS CAPACITORES DEL MOTOR HAYAN DESCARGADO EL VOLTAJE ALMACENADO. PARA LAS UNIDADES CON EJE DE DIRECCIÓN DE VELOCIDAD VARIABLE, CONSULTE LAS INSTRUCCIONES PARA LA DESCARGA DEL CONDENSADOR.

EL NO REALIZAR LO ANTERIORMENTE INDICADO, PODRÍA OCASIONAR LA MUERTE O SERIAS LESIONES PERSONALES.

LEGEND

REF DES	DESCRIPTION	LINE NO
CC1	CONTACTOR - COMPRESSOR 1	12
CC1	CONTACTOR - COMPRESSOR 1 - INSERT A	26
CC2	CONTACTOR - COMPRESSOR 2	15
CC2	CONTACTOR - COMPRESSOR 2 - INSERT A	29
CCH1	CRANKCASE HEATER 1	26
CCH2	CRANKCASE HEATER 2	29
CHTB-1	TERM BLOCK - CRANKCASE HEATER	27
CHTB-2	TERM BLOCK - CRANKCASE HEATER	30
CPR1	COMPRESSOR 1	12
CPR2	COMPRESSOR 2	15
GLC	GROUND LUG, CONTROL BOX	8
HTB 1	TERM BLOCK - UNIT	7
ODM1	MOTOR - OUTDOOR FAN 1	18
ODM2	MOTOR - OUTDOOR FAN 2	22
OFC1	CONTACTOR - OUTDOOR FAN 1	17
OFC2	CONTACTOR - OUTDOOR FAN 2	21
PHM	MODULE - PHASE MONITOR	9
TNS1	TRANSFORMER - CONTROLS PWR 1	40
TNS2	TRANSFORMER - CONTROLS PWR 2	40

WIRE COLOR ABBREVIATION CODES

CODE	COLOR	CODE	COLOR
BK	BLACK	PK	PINK
BL	BLUE	R	RED
BR	BROWN	TQ	TURQUOISE
G	GREEN	V,(PR)	PURPLE
GY	GREY	W	WHITE
O	ORANGE	Y	YELLOW

SYMBOL LEGEND

SOLID LINE	
DASHED LINES	
DASHED LINE ENCLOSURES	
PHANTOM	
	EARTH GROUND
	EQUIPMENT GROUND
	SPLICE
	JUNCTION
	MULTIPLE WIRE SYMBOL
	LINE BREAK
	TWISTED PAIR
	SHIELDED CABLE

NOTES: (STANDARD NOTES 1-3, WIRE COLOR & SYMBOL LEGEND TABLES APPLY TO ALL SHEETS.)

1. UNLESS OTHERWISE NOTED, ALL SWITCHES ARE SHOWN AT 25° C (77° F) AT ATMOSPHERIC PRESSURE, AT 50% RELATIVE HUMIDITY, WITH ALL UTILITIES TURNED OFF, AND AFTER A NORMAL SHUT DOWN HAS OCURRED.
2. SOLID LINES INDICATE WIRING PROVIDED BY TRANE CO. DASHED LINES INDICATE RECOMMENDED FIELD WIRING PROVIDED BY THE CUSTOMER. DASHED LINE ENCLOSURES AND/OR DASHED DEVICE OUTLINES INDICATE COMPONENTS PROVIDED BY THE CUSTOMER. PHANTOM LINE ENCLOSURES INDICATE ALTERNATE CIRCUITRY OR AVAILABLE SALES OPTIONS.
3. NUMBERS ALONG THE RIGHT SIDE MARGIN OF THE SCHEMATIC DESIGNATE BY LINE NUMBER THE LOCATION OF CONTACTS ENERGIZED BY COIL. AN UNDERLINED NUMBER INDICATES A NORMALLY CLOSED CONTACT. AN OPEN ARROWHEAD POINTING UPWARD BELOW THE LINE NUMBER INDICATES A TIMED CONTACT WHICH BEGINS TIMING WHEN ENERGIZED.

4. UNITS THAT ARE DUAL RATED FOR 208/230V ARE SHIPPED WITH TRANSFORMER WIRED IN THE 230V CONFIGURATION. FOR 208V OPERATION MOVE WIRE TO THE 208V TAP ON TNS1 AND TNS 2.
5. INSERT A FOR CRANCKCASE HEAT CONNECTIONS.
6. WIRES 128A, 129A, 130A PRESENT ON UNITS WITH OPTIONAL ELECTRIC HEAT. WIRES 131A,132A,133A PRESENT ON UNITS WITH OPTIONAL DISCONNECT.

CAUTION

USE COPPER CONDUCTORS ONLY! 75 DEGREES CELSIUS

UNIT TERMINALS ARE NOT DESIGNED TO ACCEPT OTHER TYPES OF CONDUCTORS.

FAILURE TO DO SO MAY CAUSE DAMAGE TO THE EQUIPMENT.

ATTENTION

N'UTILISER QUE DES CONDUCTEURS EN CUIVRE!

LES BORNES DE L'UNITÉ NE SONT PAS CONÇUES POUR RECEVOIR D'AUTRES TYPES DE CONDUCTEURS.

L'UTILISATION DE TOUT AUTRE CONDUCTEUR PEUT ENDOMMAGER L'ÉQUIPEMENT.

PRECAUCIÓN

¡UTILICE ÚNICAMENTE CONDUCTORES DE COBRE!

LAS TERMINALES DE LA UNIDAD NO ESTÁN DISEÑADAS PARA ACEPTAR OTROS TIPOS DE CONDUCTORES.

SI NO LO HACE, PUEDE OCASIONAR DAÑO AL EQUIPO.

DESIGNER:	SUDHEER KUMAR
ENGINEER:	VENKATESH.K
TRANE © DATE:	17-OCT-2023
REPLACES:	
SIMILAR TO:	
REVISION DATE:	14-JUN-2024
REVISED BY:	MOHAMMAD S
APPROVED BY:	VENKATESH.K
CAD SYSTEM USED:	CREO SCHEMATICS

TRANE ®

THIS DRAWING IS PROPRIETARY AND SHALL NOT BE COPIED OR ITS CONTENTS DISCLOSED TO OUTSIDE PARTIES WITHOUT THE WRITTEN CONSENT OF TRANE.

FOUNDATION

UNIT SCHEMATIC; SHEET 1, POWER - 15T-25T

MASTER NUMBER:	DRAWING NUMBER:	SHEET:	REV
	12134903	1	B