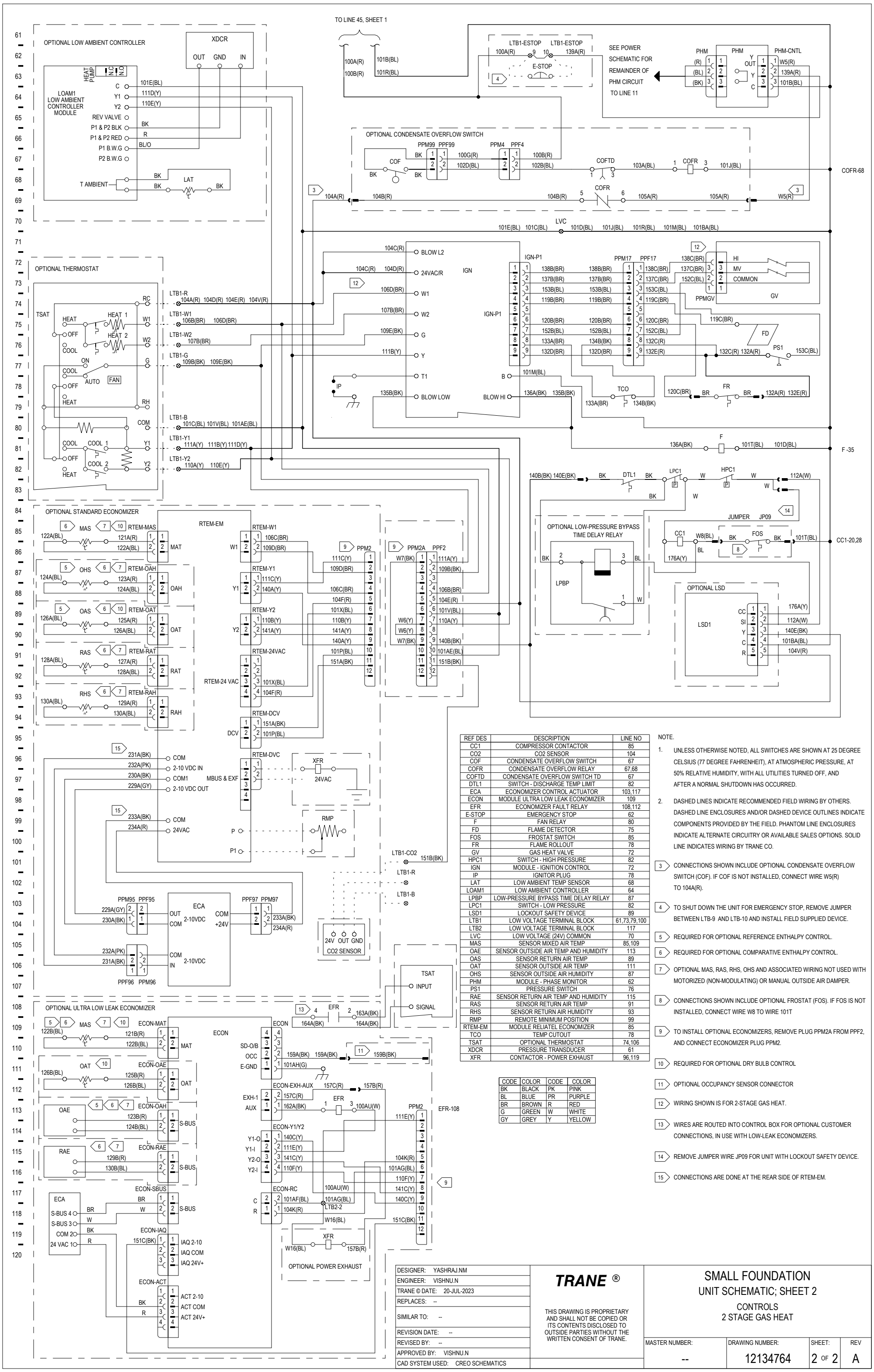

REF DES	DESCRIPTION	LINE NO
CC1	COMPRESSOR CONTACTOR	85
CO2	CO2 SENSOR	104
COF	CONDENSATE OVERFLOW SWITCH	67
COFR	CONDENSATE OVERFLOW RELAY	67,68
COFTD	CONDENSATE OVERFLOW SWITCH TD	67
DTL1	SWITCH - DISCHARGE TEMP LIMIT	82
ECA	ECONOMIZER CONTROL ACTUATOR	103,117
ECON	MODULE ULTRA LOW LEAK ECONOMIZER	109
EFR	ECONOMIZER FAULT RELAY	108,112
E-STOP	EMERGENCY STOP	62
F	FAN RELAY	80
FD	FLAME DETECTOR	75
FOS	FROSTAT SWITCH	85
FR	FLAME ROLLOUT	78
GV	GAS HEAT VALVE	72
HPC1	SWITCH - HIGH PRESSURE	82
IGN	MODULE - IGNITION CONTROL	72
IP	IGNITOR PLUG	78
LAT	LOW AMBIENT TEMP SENSOR	68
LOAM1	LOW AMBIENT CONTROLLER	64
LPBP	LOW-PRESSURE BYPASS TIME DELAY RELAY	87
LPC1	SWITCH - LOW PRESSURE	82
LSD1	LOCKOUT SAFETY DEVICE	89
LTB1	LOW VOLTAGE TERMINAL BLOCK	61,73,79,100
LTB2	LOW VOLTAGE TERMINAL BLOCK	117
LVC	LOW VOLTAGE (24V) COMMON	70
MAS	SENSOR MIXED AIR TEMP	85,109
OAE	SENSOR OUTSIDE AIR TEMP AND HUMIDITY	113
OAS	SENSOR RETURN AIR TEMP	89
OAT	SENSOR OUTSIDE AIR TEMP	111
OHS	SENSOR OUTSIDE AIR HUMIDITY	87
PHM	MODULE - PHASE MONITOR	62
PS1	PRESSURE SWITCH	76
RAE	SENSOR RETURN AIR TEMP AND HUMIDITY	115
RAS	SENSOR RETURN AIR TEMP	91
RHS	SENSOR RETURN AIR HUMIDITY	93
RMP	REMOTE MINIMUM POSITION	99
RTEM-EM	MODULE RELIATEL ECONOMIZER	85
TCO	TEMP CUTOUT	78
TSAT	OPTIONAL THERMOSTAT	74,106
XDCR	PRESSURE TRANSDUCER	61
XFR	CONTACTOR - POWER EXHAUST	96,119

CODE	COLOR	CODE	COLOR
BK	BLACK	PK	PINK
BL	BLUE	PR	PURPLE
BR	BROWN	R	RED
G	GREEN	W	WHITE
GY	GREY	Y	YELLOW

NOTE.

1. UNLESS OTHERWISE NOTED, ALL SWITCHES ARE SHOWN AT 25 DEGREE CELSIUS (77 DEGREE FAHRENHEIT), AT ATMOSPHERIC PRESSURE, AT 50% RELATIVE HUMIDITY, WITH ALL UTILITIES TURNED OFF, AND AFTER A NORMAL SHUTDOWN HAS OCCURRED.
2. DASHED LINES INDICATE RECOMMENDED FIELD WIRING BY OTHERS. DASHED LINE ENCLOSURES AND/OR DASHED DEVICE OUTLINES INDICATE COMPONENTS PROVIDED BY THE FIELD. PHANTOM LINE ENCLOSURES INDICATE ALTERNATE CIRCUITRY OR AVAILABLE SALES OPTIONS. SOLID LINE INDICATES WIRING BY TRANE CO.

3 CONNECTIONS SHOWN INCLUDE OPTIONAL CONDENSATE OVERFLOW SWITCH (COF). IF COF IS NOT INSTALLED, CONNECT WIRE W5(R) TO 104A(R).

4 TO SHUT DOWN THE UNIT FOR EMERGENCY STOP, REMOVE JUMPER BETWEEN LTB-9 AND LTB-10 AND INSTALL FIELD SUPPLIED DEVICE.

5 REQUIRED FOR OPTIONAL REFERENCE ENTHALPY CONTROL.

6 REQUIRED FOR OPTIONAL COMPARATIVE ENTHALPY CONTROL.

7 OPTIONAL MAS, RAS, RHS, OHS AND ASSOCIATED WIRING NOT USED WITH MOTORIZED (NON-MODULATING) OR MANUAL OUTSIDE AIR DAMPER.

8 CONNECTIONS SHOWN INCLUDE OPTIONAL FROSTAT (FOS). IF FOS IS NOT INSTALLED, CONNECT WIRE W8 TO WIRE 101T

9 TO INSTALL OPTIONAL ECONOMIZERS, REMOVE PLUG PPM2A FROM PPF2, AND CONNECT ECONOMIZER PLUG PPM2.

10 REQUIRED FOR OPTIONAL DRY BULB CONTROL

11 OPTIONAL OCCUPANCY SENSOR CONNECTOR

12 WIRING SHOWN IS FOR 2-STAGE GAS HEAT.

13 WIRES ARE ROUTED INTO CONTROL BOX FOR OPTIONAL CUSTOMER CONNECTIONS, IN USE WITH LOW-LEAK ECONOMIZERS.

14 REMOVE JUMPER WIRE JP09 FOR UNIT WITH LOCKOUT SAFETY DEVICE.

15 CONNECTIONS ARE DONE AT THE REAR SIDE OF RTEM-EM.

DESIGNER: YASHRAJ.NM
ENGINEER: VISHNU.N
TRANE © DATE: 20-JUL-2023
REPLACES: --
SIMILAR TO: --
REVISION DATE: --
REVISED BY: --
APPROVED BY: VISHNU.N
CAD SYSTEM USED: CREO SCHEMATICS

TRANE ®

THIS DRAWING IS PROPRIETARY AND SHALL NOT BE COPIED OR ITS CONTENTS DISCLOSED TO OUTSIDE PARTIES WITHOUT THE WRITTEN CONSENT OF TRANE.

SMALL FOUNDATION
UNIT SCHEMATIC; SHEET 2
CONTROLS
2 STAGE GAS HEAT

MASTER NUMBER:	DRAWING NUMBER:	SHEET:	REV
--	12134764	2 OF 2	A