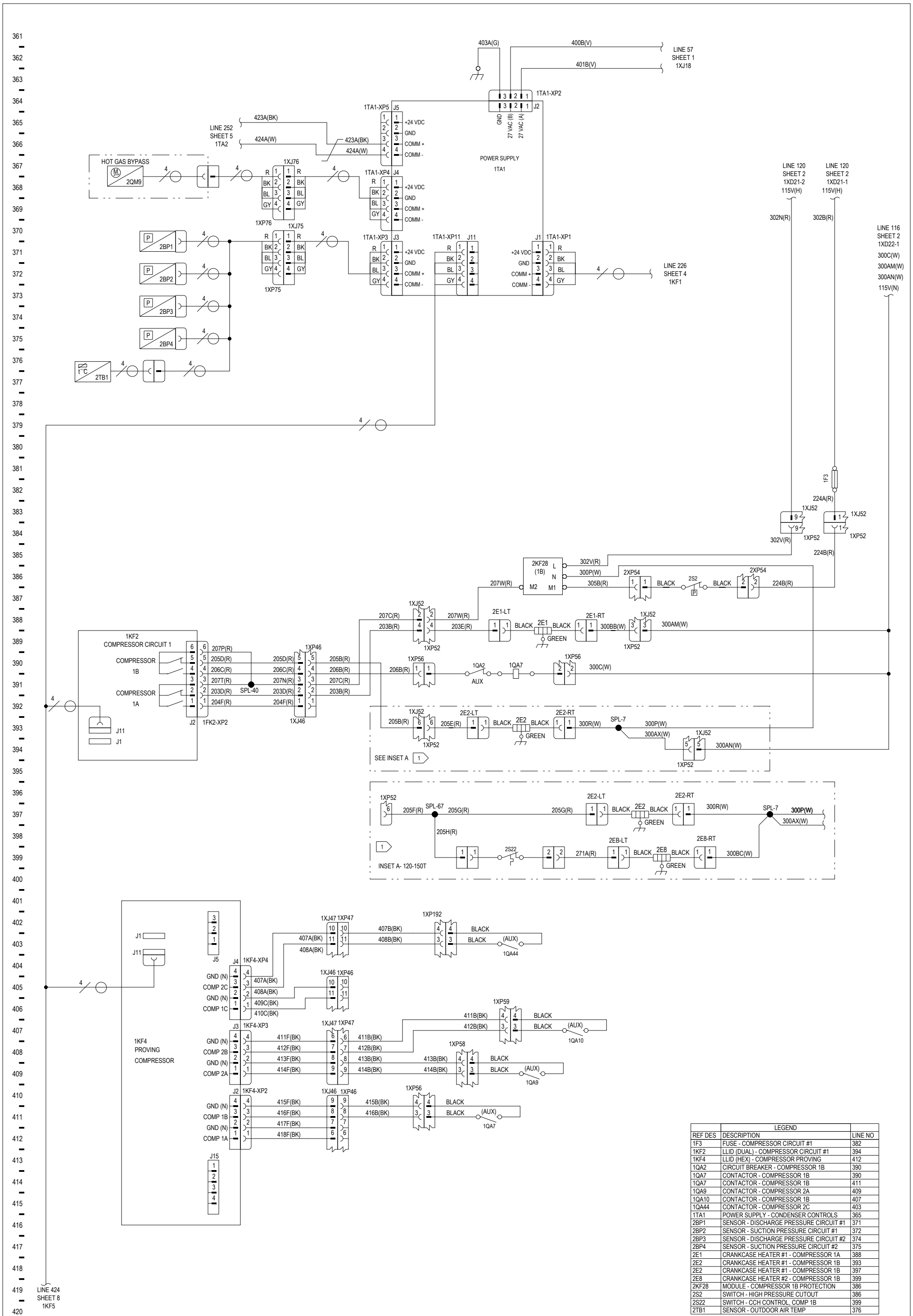

LEGEND		
REF DES	DESCRIPTION	LINE NO
1F3	FUSE - COMPRESSOR CIRCUIT #1	382
1KF2	LLID (DUAL) - COMPRESSOR CIRCUIT #1	394
1KF4	LLID (HEX) - COMPRESSOR PROVING	412
1QA2	CIRCUIT BREAKER - COMPRESSOR 1B	390
1QA7	CONTACTOR - COMPRESSOR 1B	390
1QA7	CONTACTOR - COMPRESSOR 1B	411
1QA9	CONTACTOR - COMPRESSOR 2A	409
1QA10	CONTACTOR - COMPRESSOR 1B	407
1QA44	CONTACTOR - COMPRESSOR 2C	403
1TA1	POWER SUPPLY - CONDENSER CONTROLS	365
2BP1	SENSOR - DISCHARGE PRESSURE CIRCUIT #1	371
2BP2	SENSOR - SUCTION PRESSURE CIRCUIT #1	372
2BP3	SENSOR - DISCHARGE PRESSURE CIRCUIT #2	374
2BP4	SENSOR - SUCTION PRESSURE CIRCUIT #2	375
2E1	CRANKCASE HEATER #1 - COMPRESSOR 1A	388
2E2	CRANKCASE HEATER #1 - COMPRESSOR 1B	393
2E2	CRANKCASE HEATER #1 - COMPRESSOR 1B	397
2E8	CRANKCASE HEATER #2 - COMPRESSOR 1B	399
2KF28	MODULE - COMPRESSOR 1B PROTECTION	386
2S2	SWITCH - HIGH PRESSURE CUTOUT	386
2S22	SWITCH - CCH CONTROL, COMP 1B	399
2TB1	SENSOR - OUTDOOR AIR TEMP	376

NOTES:

1 WIRING SHOWN FOR 90-105T UNITS. SEE INSET A FOR 120-150T UNITS.

DESIGNER: C.CATHCART
ENGINEER: E.CAROTA
TRANE © DATE: 11-OCT-22
REPLACES:
SIMILAR TO:
REVISION DATE: 29-NOV-22
REVISED BY: C.CATHCART
APPROVED BY: E.CAROTA
CAD SYSTEM USED: CREO SCHEMATICS

TRANE ®

THIS DRAWING IS PROPRIETARY AND SHALL NOT BE COPIED OR ITS CONTENTS DISCLOSED TO OUTSIDE PARTIES WITHOUT THE WRITTEN CONSENT OF TRANE.

IPAK 2
CONTROLS SCHEMATIC
90-150T VARIABLE SPEED REFRIGERATION SYSTEM #1

MASTER NUMBER:	DRAWING NUMBER:	SHEET:	REV
	12134653	7 OF 17	B