LEGEND		
REF DES	DESCRIPTION	LINE NO
1KF1	UNIT CONTROLS MODULE (UCM)	231
1KF27	LON INTERFACE	239
1KF32	MODULE - EXPANSION	182
1PG1	POWER METER	215
2M6	MOTOR - CONDENSER FAN 1A	215
2M7	MOTOR - CONDENSER FAN 1B	215
2M8	MOTOR - CONDENSER FAN 1C	215
2M9	MOTOR - CONDENSER FAN 2A	222
2M10	MOTOR - CONDENSER FAN 2B	222
2M11	MOTOR - CONDENSER FAN 2C	221
2M21	MOTOR - CONDENSER FAN 1D	215
2M24	MOTOR - CONDENSER FAN 2D	222
2P1	USER INTERFACE	237
2QM18	SOLENOID - OIL	197
2S4	SWITCH - HIGH PRESSURE CUTOUT VSC	199
2Y1	ANTENNA, WI-FI	237
4TB1	SUPPLY FAN VFD	215
4TB3	COMPRESSOR VFD	195
6KF29	AIR-FI MODULE	234
6TB6	RETURN/RELIEF VFD	215

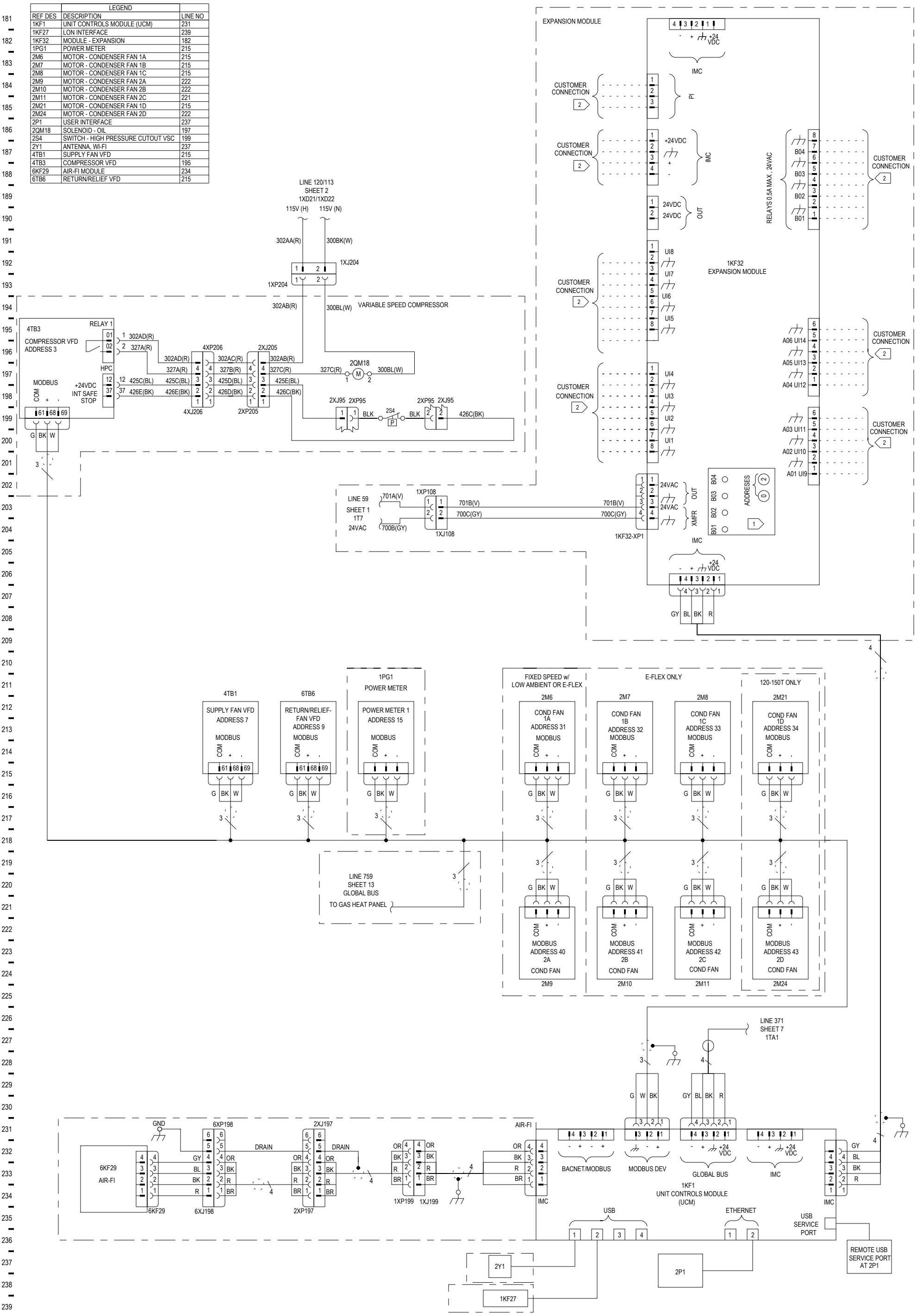

NOTES:

1. 1KF32 ADDRESS DIALS MUST BE SET TO "02".
2. CUSTOMER PROVIDED DRY CONTACTS SHOULD BE RATED FOR 5VDC / 5mA CONTROL CIRCUIT. USE CLASS 2 CIRCUIT ONLY.

DESIGNER: C.CATHCART	TRANE ®	IPAK 2
ENGINEER: E. CAROTA		CONTROLS SCHEMATIC
TRANE © DATE: 04-OCT-22		90-150T
REPLACES:		UNIT CONTROLS
SIMILAR TO:	THIS DRAWING IS PROPRIETARY AND SHALL NOT BE COPIED OR ITS CONTENTS DISCLOSED TO OUTSIDE PARTIES WITHOUT THE WRITTEN CONSENT OF TRANE.	
REVISION DATE: 29-NOV-22		MASTER NUMBER: / DRAWING NUMBER: 12134649 / SHEET: 4 OF 17 / REV B
REVISED BY: C.CATHCART		
APPROVED BY: E. CAROTA		
CAD SYSTEM USED: CREO SCHEMATICS		