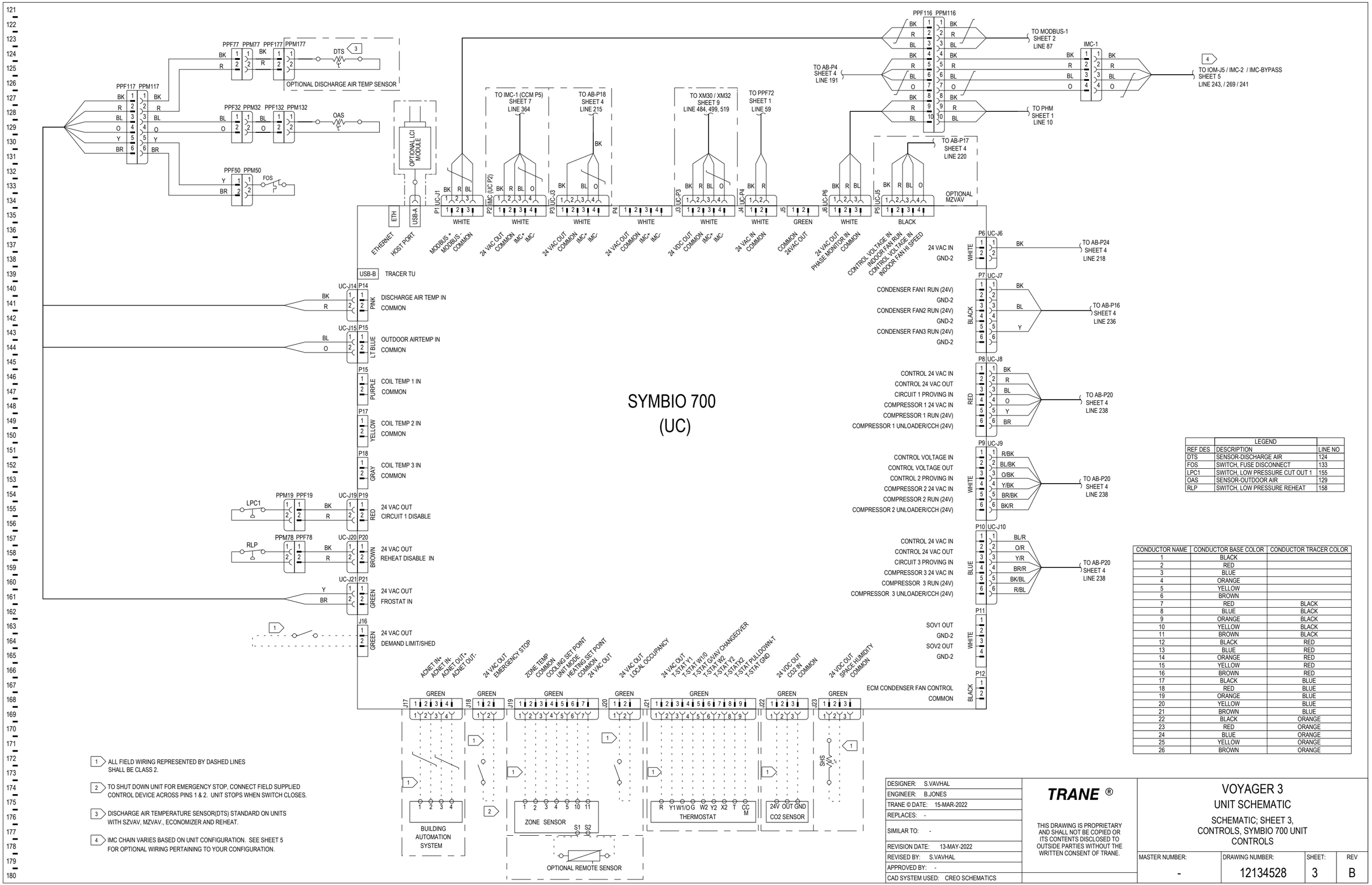

LEGEND		
REF DES	DESCRIPTION	LINE NO
DTS	SENSOR-DISCHARGE AIR	124
FOS	SWITCH, FUSE DISCONNECT	133
LPC1	SWITCH, LOW PRESSURE CUT OUT 1	155
OAS	SENSOR-OUTDOOR AIR	129
RLP	SWITCH, LOW PRESSURE REHEAT	158

CONDUCTOR NAME	CONDUCTOR BASE COLOR	CONDUCTOR TRACER COLOR
1	BLACK	
2	RED	
3	BLUE	
4	ORANGE	
5	YELLOW	
6	BROWN	
7	RED	BLACK
8	BLUE	BLACK
9	ORANGE	BLACK
10	YELLOW	BLACK
11	BROWN	BLACK
12	BLACK	RED
13	BLUE	RED
14	ORANGE	RED
15	YELLOW	RED
16	BROWN	RED
17	BLACK	BLUE
18	RED	BLUE
19	ORANGE	BLUE
20	YELLOW	BLUE
21	BROWN	BLUE
22	BLACK	ORANGE
23	RED	ORANGE
24	BLUE	ORANGE
25	YELLOW	ORANGE
26	BROWN	ORANGE

1. ALL FIELD WIRING REPRESENTED BY DASHED LINES SHALL BE CLASS 2.
2. TO SHUT DOWN UNIT FOR EMERGENCY STOP, CONNECT FIELD SUPPLIED CONTROL DEVICE ACROSS PINS 1 & 2. UNIT STOPS WHEN SWITCH CLOSES.
3. DISCHARGE AIR TEMPERATURE SENSOR(DTS) STANDARD ON UNITS WITH SZVAV, MZVAV., ECONOMIZER AND REHEAT.
4. IMC CHAIN VARIES BASED ON UNIT CONFIGURATION. SEE SHEET 5 FOR OPTIONAL WIRING PERTAINING TO YOUR CONFIGURATION.

DESIGNER:	S.VAVHAL
ENGINEER:	B.JONES
TRANE © DATE:	15-MAR-2022
REPLACES:	-
SIMILAR TO:	-
REVISION DATE:	13-MAY-2022
REVISED BY:	S.VAVHAL
APPROVED BY:	-
CAD SYSTEM USED:	CREO SCHEMATICS

TRANE ®

THIS DRAWING IS PROPRIETARY AND SHALL NOT BE COPIED OR ITS CONTENTS DISCLOSED TO OUTSIDE PARTIES WITHOUT THE WRITTEN CONSENT OF TRANE.

VOYAGER 3
UNIT SCHEMATIC
SCHEMATIC; SHEET 3,
CONTROLS, SYMBIO 700 UNIT
CONTROLS

MASTER NUMBER:	DRAWING NUMBER:	SHEET:	REV
-	12134528	3	B