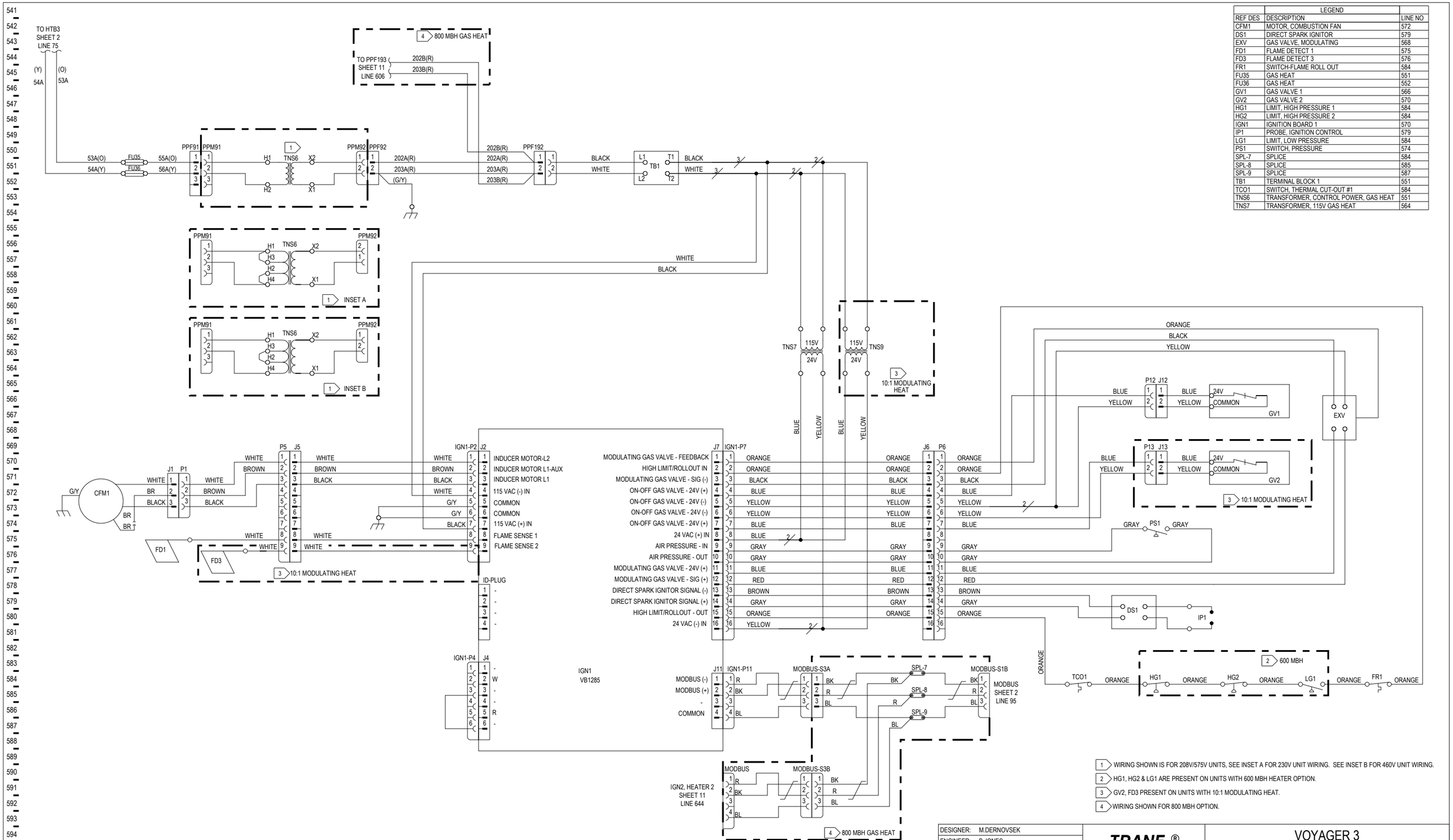

LEGEND		
REF DES	DESCRIPTION	LINE NO
CFM1	MOTOR, COMBUSTION FAN	572
DS1	DIRECT SPARK IGNITOR	579
EXV	GAS VALVE, MODULATING	568
FD1	FLAME DETECT 1	575
FD3	FLAME DETECT 3	576
FR1	SWITCH-FLAME ROLL OUT	584
FU35	GAS HEAT	551
FU36	GAS HEAT	552
GV1	GAS VALVE 1	566
GV2	GAS VALVE 2	570
HG1	LIMIT, HIGH PRESSURE 1	584
HG2	LIMIT, HIGH PRESSURE 2	584
IGN1	IGNITION BOARD 1	570
IP1	PROBE, IGNITION CONTROL	579
LG1	LIMIT, LOW PRESSURE	584
PS1	SWITCH, PRESSURE	574
SPL-7	SPLICE	584
SPL-8	SPLICE	585
SPL-9	SPLICE	587
TB1	TERMINAL BLOCK 1	551
TCO1	SWITCH, THERMAL CUT-OUT #1	584
TNS6	TRANSFORMER, CONTROL POWER, GAS HEAT	551
TNS7	TRANSFORMER, 115V GAS HEAT	564

1. WIRING SHOWN IS FOR 208V/575V UNITS, SEE INSET A FOR 230V UNIT WIRING. SEE INSET B FOR 460V UNIT WIRING.
2. HG1, HG2 & LG1 ARE PRESENT ON UNITS WITH 600 MBH HEATER OPTION.
3. GV2, FD3 PRESENT ON UNITS WITH 10:1 MODULATING HEAT.
4. WIRING SHOWN FOR 800 MBH OPTION.

DESIGNER:	M.DERNOVSEK
ENGINEER:	B.JONES
TRANE © DATE:	3-15-2022
REPLACES:	-
SIMILAR TO:	-
REVISION DATE:	4-21-2022
REVISED BY:	M.DERNOVSEK
APPROVED BY:	-
CAD SYSTEM USED:	CREO SCHEMATIC

TRANE ®

THIS DRAWING IS PROPRIETARY AND SHALL NOT BE COPIED OR ITS CONTENTS DISCLOSED TO OUTSIDE PARTIES WITHOUT THE WRITTEN CONSENT OF TRANE.

VOYAGER 3
UNIT SCHEMATIC
SCHEMATIC; SHEET 10,
GAS HEAT, HEATER 1,
MODULATING

MASTER NUMBER:	DRAWING NUMBER:	SHEET:	REV
-	12134524	10	B