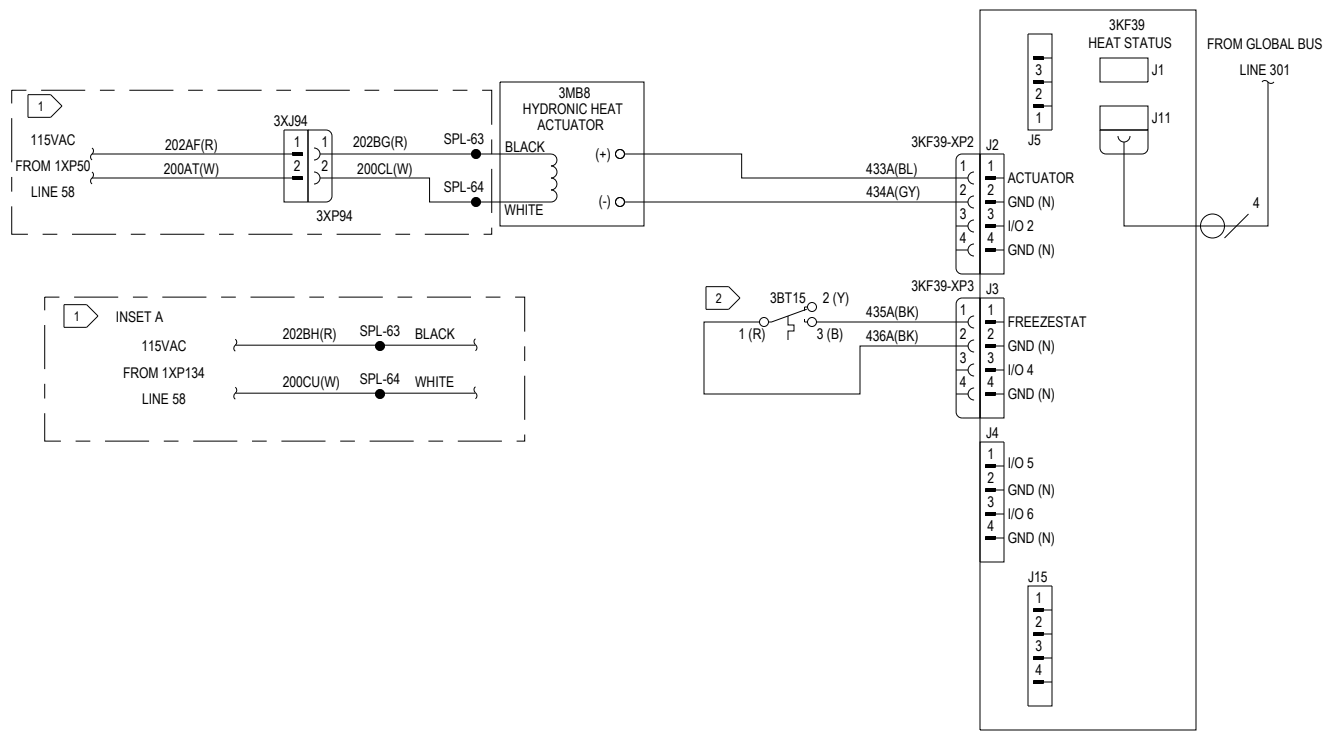

WIRE COLOR ABBREVIATION CODES			
CODE	COLOR	CODE	COLOR
BK	BLACK	PK	PINK
BL	BLUE	R	RED
BR	BROWN	TQ	TURQUOISE
G	GREEN	V,(PR)	PURPLE
GY	GREY	W	WHITE
O	ORANGE	Y	YELLOW

LOCATION CODE	
LOC#	ZONE
1	CONTROL PANEL
2	CONDENSER ZONE
3	HEAT/EXT CASING
4	SUPPLY FAN ZONE
5	EVAP/FILTERS
6	RETURN AIR ZONE
7	CUSTOMER PROVIDED

LEGEND		
REF DES	DESCRIPTION	LINE NO
3BT15	SENSOR - FREEZESTAT	669
3KF39	LLID (HEX) - HEAT STATUS	676
3MB8	ACTUATOR - HYDRONIC HEAT	666

NOTES:

1. WIRING SHOWN FOR 20-75T UNITS. SEE INSET A FOR 90-130T UNITS.
2. 3BT15 CLOSES WHEN TEMPERATURE DROPS TO FACTORY SETPOINT OF 40° F

DESIGNER:	A. WAELDE
ENGINEER:	S. MCKINLEY
TRANE © DATE:	5-FEB-2022
REPLACES:	
SIMILAR TO:	
REVISION DATE:	5-FEB-2022
REVISED BY:	A. WAELDE
APPROVED BY:	S. MCKINLEY
CAD SYSTEM USED:	CREO SCHEMATICS

TRANE ®

THIS DRAWING IS PROPRIETARY AND SHALL NOT BE COPIED OR ITS CONTENTS DISCLOSED TO OUTSIDE PARTIES WITHOUT THE WRITTEN CONSENT OF TRANE.

IPAK 1
SCHEMATIC
HYDRONIC HEAT

MASTER NUMBER:	DRAWING NUMBER:	SHEET:	REV
	12134382	12 OF 17	B