APPROVED 26/Aug/2019 19:22:50 GMT

NOTES:

2. OPTIONAL CLOGGED FILTER SWITCH.
3. REQUIRED FOR OPTIONAL VENTILATION OVERRIDE.
4. REQUIRED FOR OPTIONAL REFERENCE ENTHALPY CONTROL.
5. REQUIRED FOR OPTIONAL COMPARATIVE ENTHALPY CONTROL.
6. WIRING SHOWN IS FOR UNITS WITHOUT OPTIONAL COMMUNICATIONS BOARD (LCI/TCI/BCI) OR DEHUMIDIFICATION. FOR OPTIONAL CONNECTIONS. SEE INSET A.
7. WIRING SHOWN IS FOR UNITS WITH OPTIONAL ECONOMIZER WITHOUT STATITRAC OPTION. FOR OPTIONAL CONNECTIONS. SEE INSET B.
8. REQUIRED FOR OPTIONAL 50% POWERED EXHAUST.
9. XFM2 REQUIRED FOR OPTIONAL 100% POWERED EXHAUST.
10. 182A & 183A ARE REQUIRED FOR FRESH AIR TRACKING. FOR UNITS WITH OPTIONAL STATIRAC AND TRACS USE 182B & 183B
11. CUSTOMER TO PROVIDE WIRES 408A (WHT). 409A (BLK) AND GROUND WIRE (G/Y) WHEN FIELD POWERED.
12. WIRE 36BS IS NOT USED FOR 35 TON UNITS.
13. WIRE 174A REQUIRED FOR TC (COOLING/NO HEAT) UNITS ONLY.
14. WIRES 65E AND 67B ARE USED ON TE (ELECTRIC HEAT) UNITS ONLY.
18. SEE APPLICABLE VARIABLE FREQUENCY DRIVE DIAGRAM FOR BALANCE OF CIRCUIT.
19. PLUGS LOCATED IN MAIN CONTROL PANEL.
20. WIRES REQUIRED FOR V.F.D. WITH BYPASS OPTION ONLY.
22. SENSOR EET AND WIRES 110A & 111A USED WITH OPTIONAL DEHUMIDIFICATION AND IS ATTACHED TO CIRCUIT 1 FOR 27.5-35 TON UNITS. AND TO CIRCUIT 2 FOR 40-50 TON UNITS.
23. WIRE 117A IS REQUIRED TO ENABLE DEHUMIDIFICATION. WIRES 141A AND 142A ARE USED WITH DEHUMIDIFICATION AND CUSTOMER INSTALLED SPACE HUMIDITY SENSOR (SHS). WIRES 112A AND 113A ARE USED WITH DEHUMIDIFICATION AND CUSTOMER INSTALLED HUMIDISTAT (HST).
24. WIRE 62B IS USED ON CV UNITS AND 62A IS USED ON VAV/SZVAV UNITS.
25. DISCONNECT WIRES 36BW AND 36BV ON HORIZONTAL UNITS.
26. 182F & 183F ARE REQUIRED FOR FRESH AIR TRACKING. FOR UNITS WITH OPTIONAL STATIRAC AND TRAQ USE 182G & 183G.
27. REQUIRED FOR ULTRA LOW LEAK DAMPER.
28. WIRES 182C & 183C ARE REQUIRED FOR ULTRA LOW LEAK DAMPE
29. OPTIONAL HUMAN INTERFACE
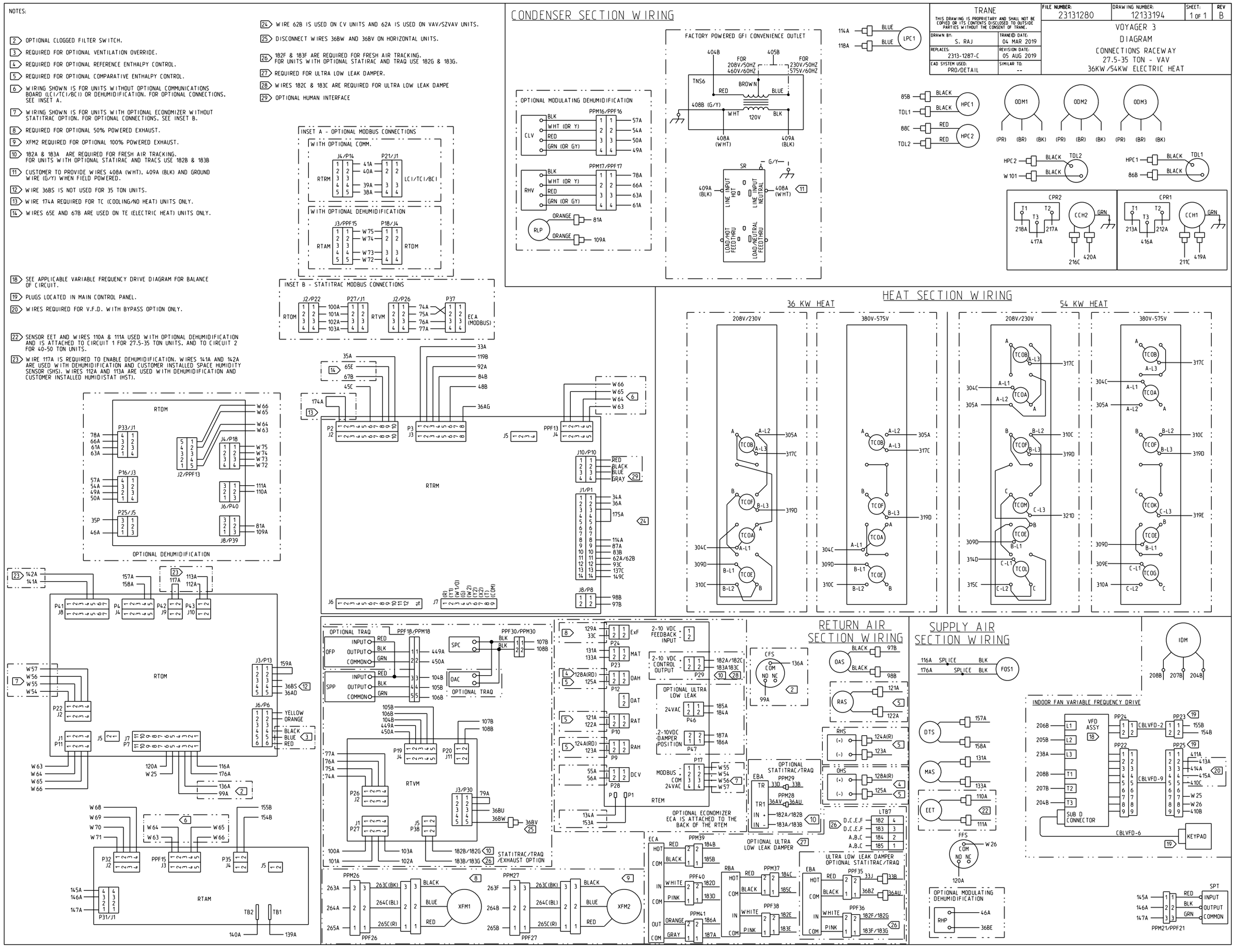
TRANE	FILE NUMBER: 23131280	DRAWING NUMBER: 12133194	SHEET: 1 OF 1	REV B
THIS DRAWING IS PROPRIETARY AND SHALL NOT BE COPIED OR ITS CONTENTS DISCLOSED TO OUTSIDE PARTIES WITHOUT THE CONSENT OF TRANE.	DRAWN BY: S. RAJ	TRANE® DATE: 04 MAR 2019	VOYAGER 3 DIAGRAM CONNECTIONS RACEWAY 27.5-35 TON - VAV 36KW /54KW ELECTRIC HEAT	
	REPLACES: 2313-1287-C	REVISION DATE: 05 AUG 2019		
	CAD SYSTEM USED: PRO/DETAIL	SIMILAR TO: --