APPROVED 26/Aug/2019 19:31:30 GMT

NOTES:

1. OPTIONAL DISCHARGE AIR TEMPERATURE SENSOR REQUIRED FOR SUPPLY AIR TEMPERING AND DEHUMIDIFICATION.
2. OPTIONAL CLOGGED FILTER SWITCH.
3. REQUIRED FOR OPTIONAL VENTILATION OVERRIDE.
4. REQUIRED FOR OPTIONAL REFERENCE ENTHALPY CONTROL.
5. REQUIRED FOR OPTIONAL COMPARATIVE ENTHALPY CONTROL.
6. WIRING SHOWN IS FOR UNITS WITHOUT OPTIONAL COMMUNICATIONS BOARD (LCI/TCI/BCI) OR DEHUMIDIFICATION. FOR OPTIONAL CONNECTIONS. SEE INSET A.
7. WIRING SHOWN IS FOR UNITS WITH OPTIONAL ECONOMIZER WITHOUT STATITRAC OPTION. FOR OPTIONAL CONNECTIONS. SEE INSET B.
8. REQUIRED FOR OPTIONAL 50% POWERED EXHAUST.
9. XFM2 REQUIRED FOR OPTIONAL 100% POWERED EXHAUST.
10. 182A & 183A ARE REQUIRED FOR FRESH AIR TRACKING. FOR UNITS WITH OPTIONAL STATIRAC AND TRAQ USE 182B & 183B
11. CUSTOMER TO PROVIDE WIRES 408A (WHT). 409A (BLK) AND GROUND WIRE (G/Y) WHEN FIELD POWERED.
12. WIRE 36BS IS NOT USED FOR 50 TON UNITS.
13. WIRE 174A REQUIRED FOR TC (COOLING/NO HEAT) UNITS ONLY.
14. WIRES 65E AND 67B ARE USED ON TE (ELECTRIC HEAT) UNITS ONLY.
20. SENSOR EET AND WIRES 110A & 111A USED WITH OPTIONAL DEHUMIDIFICATION AND IS ATTACHED TO CIRCUIT 1 FOR 27.5-35 TON UNITS. AND TO CIRCUIT 2 FOR 40-50 TON UNITS.
21. WIRE 117A IS REQUIRED TO ENABLE DEHUMIDIFICATION. WIRES 141A AND 142A ARE USED WITH DEHUMIDIFICATION AND CUSTOMER INSTALLED SPACE HUMIDITY SENSOR (SHS). WIRES 112A AND 113A ARE USED WITH DEHUMIDIFICATION AND CUSTOMER INSTALLED HUMIDISTAT (HST).
22. WIRE 62B IS USED ON CV UNITS AND 62A IS USED ON VAV/SZVAV UNITS.
25. DISCONNECT WIRES 36BW AND 36BV ON HORIZONTAL UNITS.
26. 182F & 183F ARE REQUIRED FOR FRESH AIR TRACKING. FOR UNITS WITH OPTIONAL STATIRAC AND TRAQ USE 182G & 183G.
27. REQUIRED FOR ULTRA LOW LEAK DAMPER.
28. WIRES 182C & 183C ARE REQUIRED FOR ULTRA LOW LEAK DAMPER
29. OPTIONAL HUMAN INTERFACE

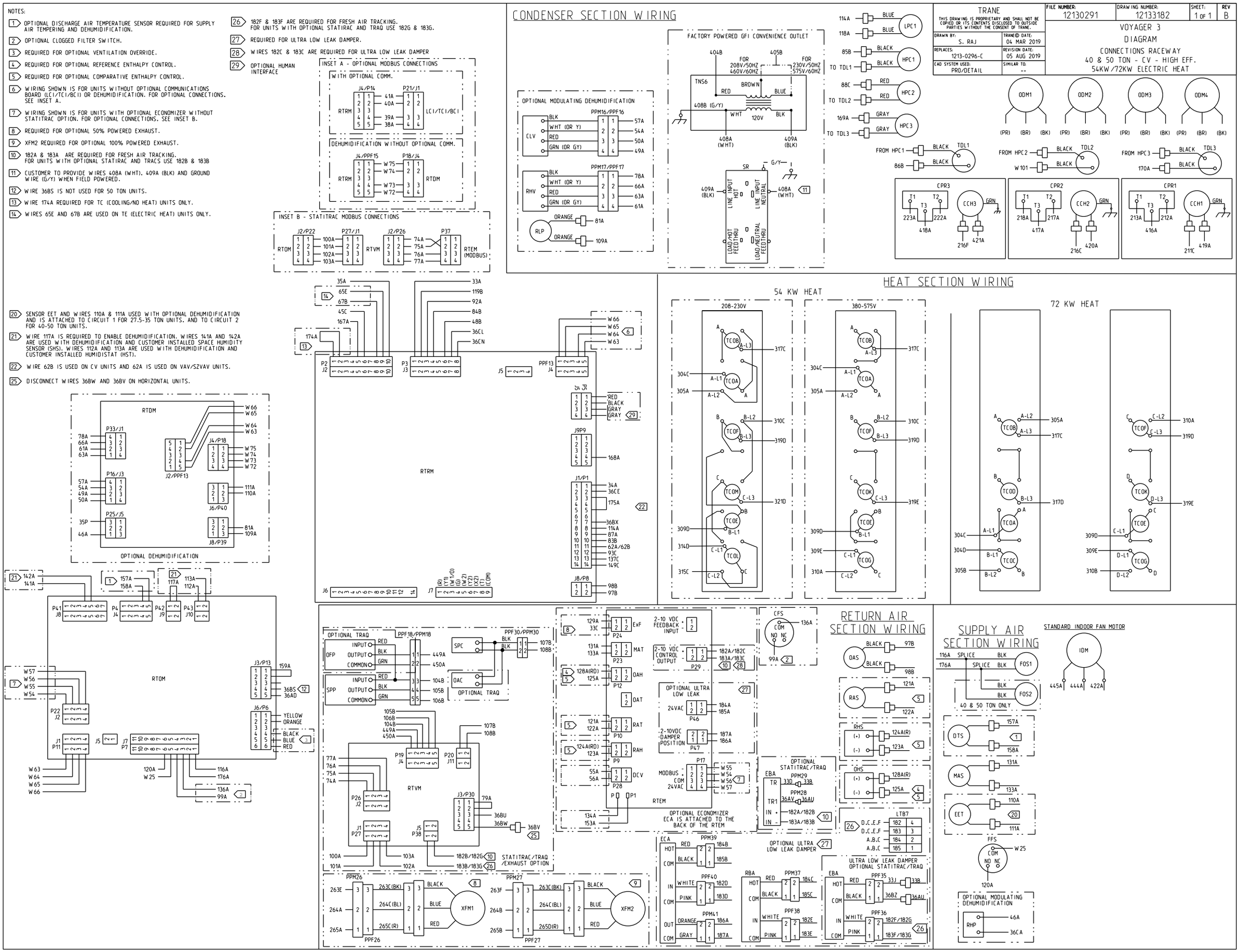

TRANE	FILE NUMBER: 12130291	DRAWING NUMBER: 12133182	SHEET: 1 OF 1	REV B
THIS DRAWING IS PROPRIETARY AND SHALL NOT BE COPIED OR ITS CONTENTS DISCLOSED TO OUTSIDE PARTIES WITHOUT THE CONSENT OF TRANE.	VOYAGER 3 DIAGRAM CONNECTIONS RACEWAY 40 & 50 TON - CV - HIGH EFF. 54KW /72KW ELECTRIC HEAT			
DRAWN BY: S. RAJ	TRANE® DATE: 04 MAR 2019			
REPLACES: 1213-0296-C	REVISION DATE: 05 AUG 2019			
CAD SYSTEM USED: PRO/DETAIL	SIMILAR TO: --			