⚠WARNING

HAZARDOUS VOLTAGE!

DISCONNECT ALL ELECTRIC POWER INCLUDING REMOTE DISCONNECTS AND FOLLOW LOCK OUT AND TAG PROCEDURES BEFORE SERVICING. INSURE THAT ALL MOTOR CAPACITORS HAVE DISCHARGED STORED VOLTAGE. UNITS WITH VARIABLE SPEED DRIVE, REFER TO DRIVE INSTRUCTIONS FOR CAPACITOR DISCHARGE.

FAILURE TO DO THE ABOVE BEFORE SERVICING COULD RESULT IN DEATH OR SERIOUS INJURY.

⚠AVERTISSEMENT

TENSION DANGEREUSE!

COUPER TOUTES LES TENSIONS ET OUVRIR LES SECTIONNEURS À DISTANCE, PUIS SUIVRE LES PROCÉDURES DE VERROUILLAGE ET DES ÉTIQUETTES AVANT TOUTE INTERVENTION. VÉRIFIER QUE TOUS LES CONDENSATEURS DES MOTEURS SONT DÉCHARGÉS. DANS LE CAS D'UNITÉS COMPORTANT DES ENTRAÎNEMENTS À VITESSE VARAIBLE, SE REPORTER AUX INSTRUCTIONS DE L'ENTRAÎNEMENT POUR DÉCHARGER LES CONDENSATEURS.

NE PAS RESPECTER CES MESURES DE PRÉCAUTION PEUT ENTRAÎNER DES BLESSURES GRAVES POUVANT ÊTRE MORTELLES.

⚠ADVERTENCIA

¡VOLTAJE PELIGROSO!

DESCONECTE TODA LA ENERGÍA ELÉCTRICA, INCLUSO LAS DESCONEXIONES REMOTAS Y SIGA LOS PROCEDIMIENTOS DE CIERRE Y ETIQUETADO ANTES DE PROCEDER AL SERVICIO. ASEGÚRESE DE QUE TODOS LOS CAPACITORES DEL MOTOR HAYAN DESCARGADO EL VOLTAJE ALMACENADO. PARA LAS UNIDADES CON EJE DE DIRECCIÓN DE VELOCIDAD VARIABLE, CONSULTE LAS INSTRUCCIONES PARA LA DESCARGA DEL CONDENSADOR.

EL NO REALIZAR LO ANTERIORMENTE INDICADO, PODRÍA OCASIONAR LA MUERTE O SERIAS LESIONES PERSONALES.

WIRE COLOR ABBREVIATION CODES			
CODE	COLOR	CODE	COLOR
BK	BLACK	PK	PINK
BL	BLUE	R	RED
BR	BROWN	TQ	TURQUOISE
G	GREEN	V,(PR)	PURPLE
GY	GREY	W	WHITE
O	ORANGE	Y	YELLOW

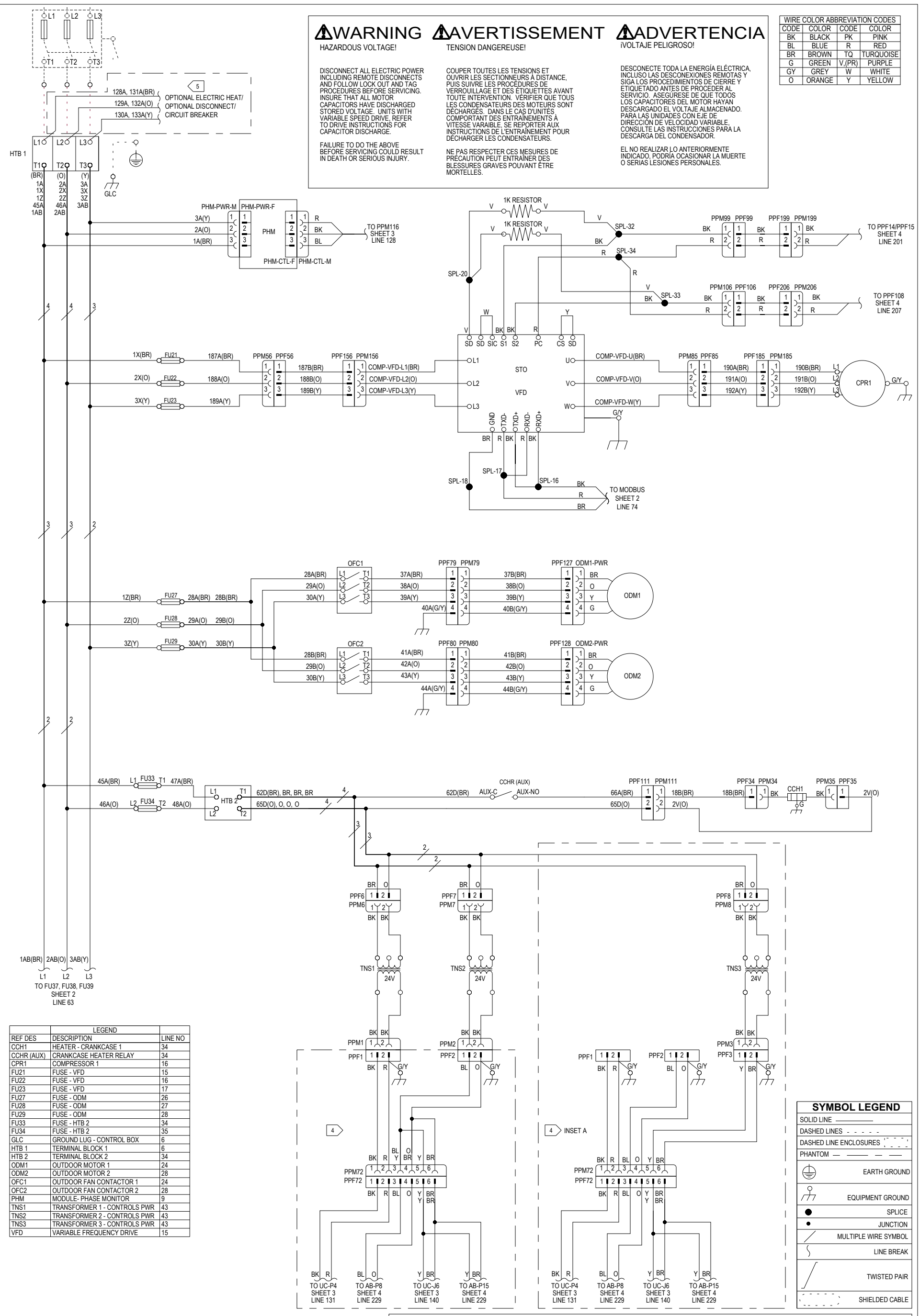

LEGEND		
REF DES	DESCRIPTION	LINE NO
CCH1	HEATER - CRANKCASE 1	34
CCHR (AUX)	CRANKCASE HEATER RELAY	34
CPR1	COMPRESSOR 1	16
FU21	FUSE - VFD	15
FU22	FUSE - VFD	16
FU23	FUSE - VFD	17
FU27	FUSE - ODM	26
FU28	FUSE - ODM	27
FU29	FUSE - ODM	28
FU33	FUSE - HTB 2	34
FU34	FUSE - HTB 2	35
GLC	GROUND LUG - CONTROL BOX	6
HTB 1	TERMINAL BLOCK 1	6
HTB 2	TERMINAL BLOCK 2	34
ODM1	OUTDOOR MOTOR 1	24
ODM2	OUTDOOR MOTOR 2	28
OFC1	OUTDOOR FAN CONTACTOR 1	24
OFC2	OUTDOOR FAN CONTACTOR 2	28
PHM	MODULE- PHASE MONITOR	9
TNS1	TRANSFORMER 1 - CONTROLS PWR	43
TNS2	TRANSFORMER 2 - CONTROLS PWR	43
TNS3	TRANSFORMER 3 - CONTROLS PWR	43
VFD	VARIABLE FREQUENCY DRIVE	15

SYMBOL LEGEND

- SOLID LINE
- DASHED LINES
- DASHED LINE ENCLOSURES
- PHANTOM
- EARTH GROUND
- EQUIPMENT GROUND
- SPLICE
- JUNCTION
- MULTIPLE WIRE SYMBOL
- LINE BREAK
- TWISTED PAIR
- SHIELDED CABLE

NOTES: (STANDARD NOTES 1-3, WIRE COLOR & SYMBOL LEGEND TABLES APPLY TO ALL SHEETS.)

1. UNLESS OTHERWISE NOTED, ALL SWITCHES ARE SHOWN AT 25° C (77° F) AT ATMOSPHERIC PRESSURE, AT 50% RELATIVE HUMIDITY, WITH ALL UTILITIES TURNED OFF, AND AFTER A NORMAL SHUT DOWN HAS OCURRED.
2. SOLID LINES INDICATE WIRING PROVIDED BY TRANE CO. DASHED LINES INDICATE RECOMMENDED FIELD WIRING PROVIDED BY THE CUSTOMER. DASHED LINE ENCLOSURES AND/OR DASHED DEVICE OUTLINES INDICATE COMPONENTS PROVIDED BY THE CUSTOMER. PHANTOM LINE ENCLOSURES INDICATE ALTERNATE CIRCUITRY OR AVAILABLE SALES OPTIONS.
3. NUMBERS ALONG THE RIGHT SIDE MARGIN OF THE SCHEMATIC DESIGNATE THE LOCATION OF CONTACTS ENERGIZED BY COIL BY LINE NUMBER. AN UNDERLINED NUMBER INDICATES A NORMALLY CLOSED CONTACT. AN OPEN ARROWHEAD POINTING UPWARD BELOW THE LINE NUMBER INDICATES A TIMED CONTACT WHICH BEGINS TIMING WHEN ENERGIZED.

4 TNS3 PRESENT ON UNITS WITH OPTIONAL HOT GAS REHEAT ONLY. SEE INSET A FOR 3 TRANSFORMER WIRING CONFIGURATION.

5 WIRES 128A, 129A, 130A PRESENT ON UNITS WITH OPTIONAL ELECTRIC HEAT. WIRES 131A, 132A, 133A PRESENT ON UNITS WITH OPTIONAL DISCONNECT/CIRCUIT BREAKER.

CAUTION

USE COPPER CONDUCTORS ONLY! 75C

UNIT TERMINALS ARE NOT DESIGNED TO ACCEPT OTHER TYPES OF CONDUCTORS.

FAILURE TO DO SO MAY CAUSE DAMAGE TO THE EQUIPMENT.

ATTENTION

N'UTILISER QUE DES CONDUCTEURS EN CUIVRE!

LES BORNES DE L'UNITÉ NE SONT PAS CONÇUES POUR RECEVOIR D'AUTRES TYPES DE CONDUCTEURS.

L'UTILISATION DE TOUT AUTRE CONDUCTEUR PEUT ENDOMMAGER L'ÉQUIPEMENT.

PRECAUCIÓN

¡UTILICE ÚNICAMENTE CONDUCTORES DE COBRE!

LAS TERMINALES DE LA UNIDAD NO ESTÁN DISEÑADAS PARA ACEPTAR OTROS TIPOS DE CONDUCTORES.

SI NO LO HACE, PUEDE OCASIONAR DAÑO AL EQUIPO.

DESIGNER:	M. DERNOVSEK
ENGINEER:	D. SHELTON
TRANE © DATE:	20-MAY-2024
REPLACES:	
SIMILAR TO:	
REVISION DATE:	17-JUN-2024
REVISED BY:	M. DERNOVSEK
APPROVED BY:	D. SHELTON
CAD SYSTEM USED:	CREO SCHEMATICS

TRANE ®

THIS DRAWING IS PROPRIETARY AND SHALL NOT BE COPIED OR ITS CONTENTS DISCLOSED TO OUTSIDE PARTIES WITHOUT THE WRITTEN CONSENT OF TRANE.

PRECEDENT

UNIT SCHEMATIC; SHEET 1,

POWER, SINGLE COMPRESSOR, DUAL CONDENSER FAN, EFLEX, 575V, HIGH SCCR

MASTER NUMBER:	DRAWING NUMBER:	SHEET:	REV
*	12135017	1	B