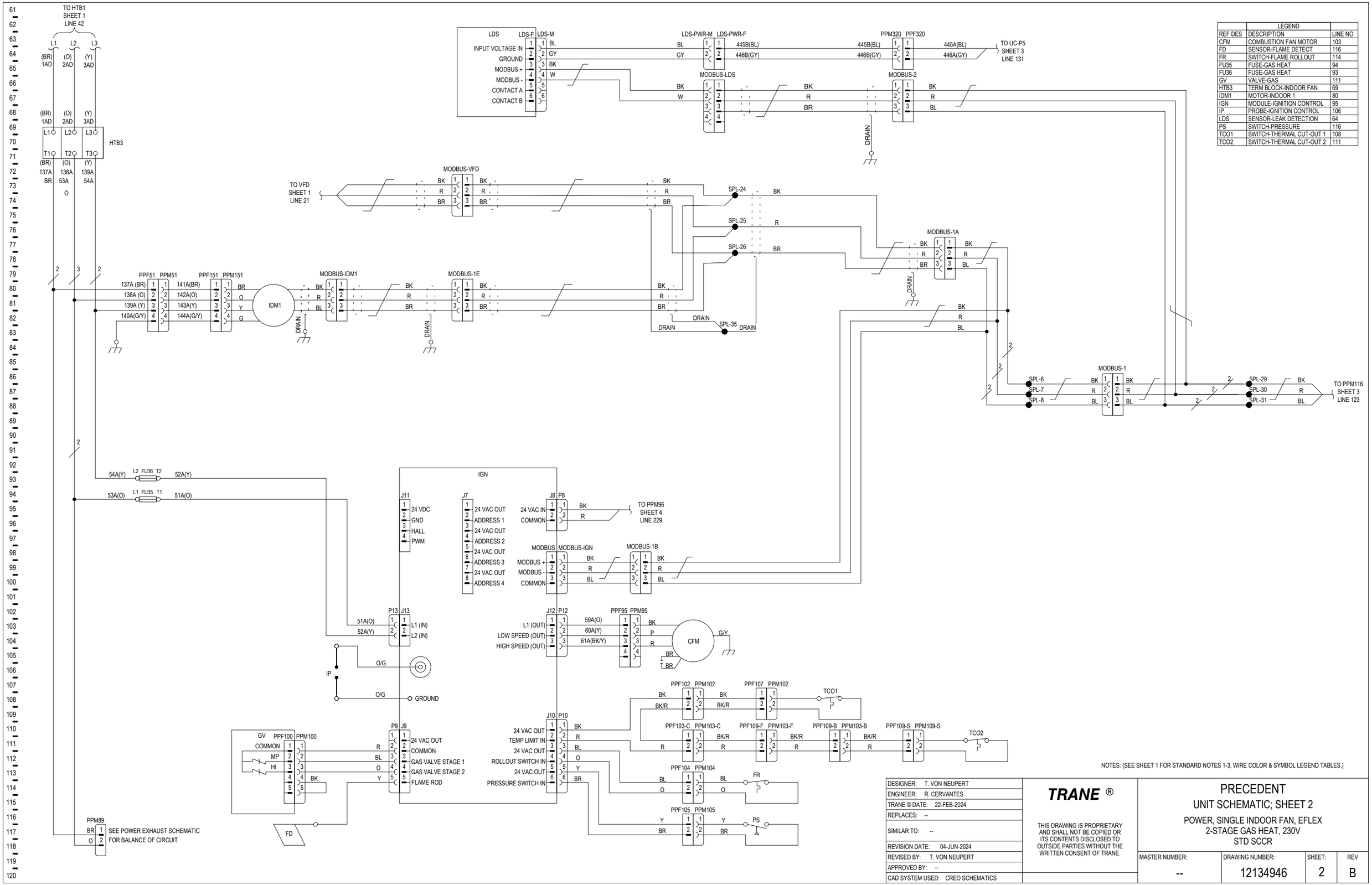

LEGEND		
REF DES	DESCRIPTION	LINE NO
CFM	COMBUSTION FAN MOTOR	103
FD	SENSOR-FLAME DETECT	116
FR	SWITCH-FLAME ROLLOUT	114
FU35	FUSE-GAS HEAT	94
FU36	FUSE-GAS HEAT	93
GV	VALVE-GAS	111
HTB3	TERM BLOCK-INDOOR FAN	69
IDM1	MOTOR-INDOOR 1	80
IGN	MODULE-IGNITION CONTROL	95
IP	PROBE-IGNITION CONTROL	106
LDS	SENSOR-LEAK DETECTION	64
PS	SWITCH-PRESSURE	116
TCO1	SWITCH-THERMAL CUT-OUT 1	108
TCO2	SWITCH-THERMAL CUT-OUT 2	111

NOTES: (SEE SHEET 1 FOR STANDARD NOTES 1-3, WIRE COLOR & SYMBOL LEGEND TABLES.)

DESIGNER:	T. VON NEUPERT
ENGINEER:	R. CERVANTES
TRANE © DATE:	22-FEB-2024
REPLACES:	--
SIMILAR TO:	--
REVISION DATE:	04-JUN-2024
REVISED BY:	T. VON NEUPERT
APPROVED BY:	--
CAD SYSTEM USED:	CREO SCHEMATICS

TRANE ®

THIS DRAWING IS PROPRIETARY AND SHALL NOT BE COPIED OR ITS CONTENTS DISCLOSED TO OUTSIDE PARTIES WITHOUT THE WRITTEN CONSENT OF TRANE.

PRECEDENT
UNIT SCHEMATIC; SHEET 2
POWER, SINGLE INDOOR FAN, EFLEX
2-STAGE GAS HEAT, 230V
STD SCCR

MASTER NUMBER:	DRAWING NUMBER:	SHEET:	REV
--	12134946	2	B