LEGEND		
REF DES	DESCRIPTION	LINE NO
CFM	COMBUSTION FAN MOTOR	88
FD	SENSOR-FLAME DETECT	96
FR	SWITCH-FLAME ROLLOUT	96
FU35	FUSE-GAS HEAT	81
FU36	FUSE-GAS HEAT	80
FU37	FUSE-HTB3	65
FU38	FUSE-HTB3	65
FU39	FUSE-HTB3	65
GV	VALVE-GAS	94
HTB3	TERM BLOCK-INDOOR FAN	67
IDM1	MOTOR-INDOOR 1	72
IDM2	MOTOR-INDOOR 2	76
IGN	MODULE-IGNITION CONTROL	83
IP	PROBE-IGNITION CONTROL	90
TCO1	SWITCH-THERMAL CUT-OUT 1	92
TCO2	SWITCH-THERMAL CUT-OUT 2	94

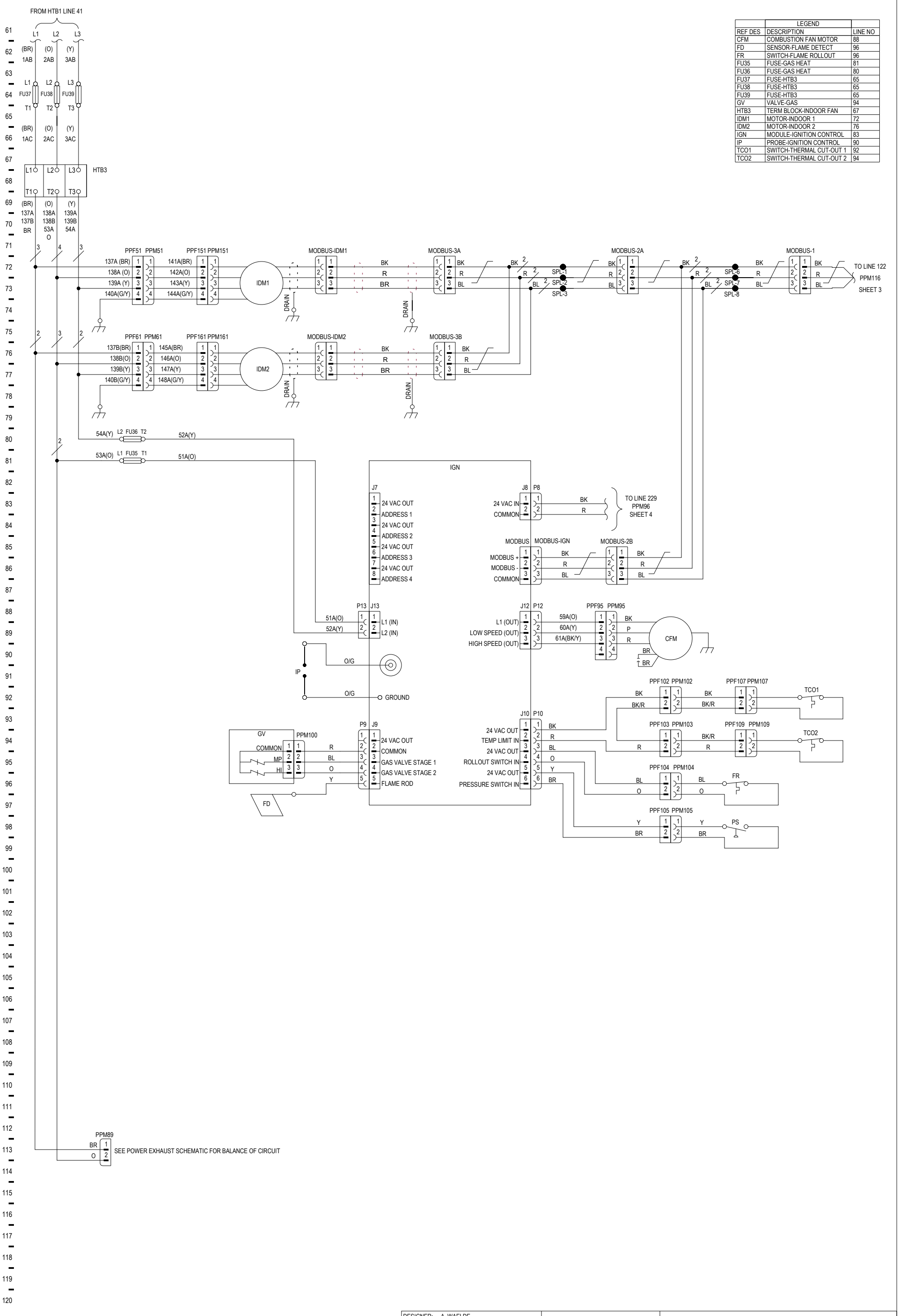

DESIGNER: A. WAELDE	TRANE ®	PRECEDENT
ENGINEER: B. JONES		UNIT SCHEMATIC; SHEET 2
TRANE © DATE: 10-AUG-2021		POWER, DUAL INDOOR FAN
REPLACES: --		2-STAGE GAS HEAT, 230V
SIMILAR TO: --	THIS DRAWING IS PROPRIETARY AND SHALL NOT BE COPIED OR ITS CONTENTS DISCLOSED TO OUTSIDE PARTIES WITHOUT THE WRITTEN CONSENT OF TRANE.	HIGH SCCR
REVISION DATE: 4/12/2022		MASTER NUMBER: -- / DRAWING NUMBER: 12134347 / SHEET: 2 OF 10 / REV: C
REVISED BY: T.PEED		
APPROVED BY: B. JONES		
CAD SYSTEM USED: SCHEMATICS		