⚠WARNING

HAZARDOUS VOLTAGE!

DISCONNECT ALL ELECTRIC POWER INCLUDING REMOTE DISCONNECTS AND FOLLOW LOCK OUT AND TAG PROCEDURES BEFORE SERVICING. INSURE THAT ALL MOTOR CAPACITORS HAVE DISCHARGED STORED VOLTAGE. UNITS WITH VARIABLE SPEED DRIVE, REFER TO DRIVE INSTRUCTIONS FOR CAPACITOR DISCHARGE.

FAILURE TO DO THE ABOVE BEFORE SERVICING COULD RESULT IN DEATH OR SERIOUS INJURY.

⚠AVERTISSEMENT

TENSION DANGEREUSE!

COUPER TOUTES LES TENSIONS ET OUVRIR LES SECTIONNEURS À DISTANCE, PUIS SUIVRE LES PROCÉDURES DE VERROUILLAGE ET DES ÉTIQUETTES AVANT TOUTE INTERVENTION. VÉRIFIER QUE TOUS LES CONDENSATEURS DES MOTEURS SONT DÉCHARGÉS. DANS LE CAS D'UNITÉS COMPORTANT DES ENTRAÎNEMENTS À VITESSE VARAIBLE, SE REPORTER AUX INSTRUCTIONS DE L'ENTRAÎNEMENT POUR DÉCHARGER LES CONDENSATEURS.

NE PAS RESPECTER CES MESURES DE PRÉCAUTION PEUT ENTRAÎNER DES BLESSURES GRAVES POUVANT ÊTRE MORTELLES.

⚠ADVERTENCIA

¡VOLTAJE PELIGROSO!

DESCONECTE TODA LA ENERGÍA ELÉCTRICA, INCLUSO LAS DESCONEXIONES REMOTAS Y SIGA LOS PROCEDIMIENTOS DE CIERRE Y ETIQUETADO ANTES DE PROCEDER AL SERVICIO. ASEGÚRESE DE QUE TODOS LOS CAPACITORES DEL MOTOR HAYAN DESCARGADO EL VOLTAJE ALMACENADO. PARA LAS UNIDADES CON EJE DE DIRECCIÓN DE VELOCIDAD VARIABLE, CONSULTE LAS INSTRUCCIONES PARA LA DESCARGA DEL CONDENSADOR.

EL NO REALIZAR LO ANTERIORMENTE INDICADO, PODRÍA OCASIONAR LA MUERTE O SERIAS LESIONES PERSONALES.

WIRE COLOR ABBREVIATION CODES			
CODE	COLOR	CODE	COLOR
BK	BLACK	PK	PINK
BL	BLUE	R	RED
BR	BROWN	TQ	TURQUOISE
G	GREEN	V,(PR)	PURPLE
GY	GREY	W	WHITE
O	ORANGE	Y	YELLOW

LEGEND		
REF DES	DESCRIPTION	LINE NO
CC1	CONTACTOR - COMPRESSOR 1	12
CC2	CONTACTOR - COMPRESSOR 2	14
CCH1	CRANKCASE HEATER 1	25
CCH2	CRANKCASE HEATER 2	28
CPR1	COMPRESSOR 1	12
CPR2	COMPRESSOR 2	15
FU33	FUSE - HTB 1	26
FU34	FUSE - HTB 2	27
HTB 1	TERM BLOCK - UNIT	6
HTB2	TERM BLOCK - XFMR & CCH	26
ODM1	MOTOR - OUTDOOR FAN 1	18
ODM2	MOTOR - OUTDOOR FAN 2	22
OFC1	CONTACTOR - OUTDOOR FAN 1	18
PHM	MODULE - PHASE MONITOR	8
TNS1	TRANSFORMER - CONTROLS PWR 1	41
TNS2	TRANSFORMER - CONTROLS PWR 2	40
TNS3	TRANSFORMER - CONTROLS PWR 3	40

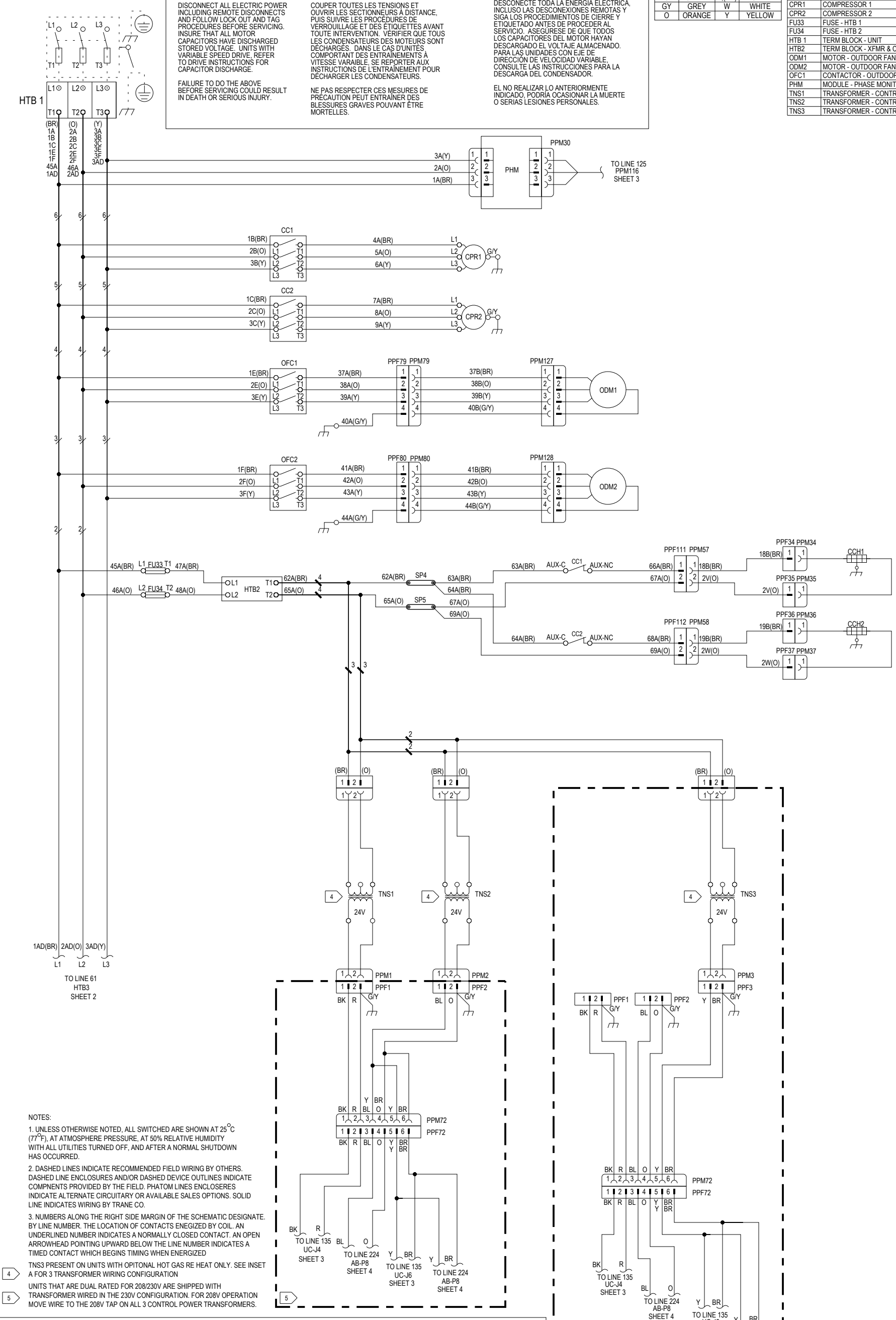

NOTES:

1. UNLESS OTHERWISE NOTED, ALL SWITCHED ARE SHOWN AT 25°C (77°F), AT ATMOSPHERE PRESSURE, AT 50% RELATIVE HUMIDITY WITH ALL UTILITIES TURNED OFF, AND AFTER A NORMAL SHUTDOWN HAS OCCURRED.
2. DASHED LINES INDICATE RECOMMENDED FIELD WIRING BY OTHERS. DASHED LINE ENCLOSURES AND/OR DASHED DEVICE OUTLINES INDICATE COMPNENTS PROVIDED BY THE FIELD. PHATOM LINES ENCLOSERES INDICATE ALTERNATE CIRCUITARY OR AVAILABLE SALES OPTIONS. SOLID LINE INDICATES WIRING BY TRANE CO.
3. NUMBERS ALONG THE RIGHT SIDE MARGIN OF THE SCHEMATIC DESIGNATE. BY LINE NUMBER. THE LOCATION OF CONTACTS ENEGIZED BY COIL. AN UNDERLINED NUMBER INDICATES A NORMALLY CLOSED CONTACT. AN OPEN ARROWHEAD POINTING UPWARD BELOW THE LINE NUMBER INDICATES A TIMED CONTACT WHICH BEGINS TIMING WHEN ENERGIZED

4 TNS3 PRESENT ON UNITS WITH OPITONAL HOT GAS RE HEAT ONLY. SEE INSET A FOR 3 TRANSFORMER WIRING CONFIGURATION

5 UNITS THAT ARE DUAL RATED FOR 208/230V ARE SHIPPED WITH TRANSFORMER WIRED IN THE 230V CONFIGURATION. FOR 208V OPERATION MOVE WIRE TO THE 208V TAP ON ALL 3 CONTROL POWER TRANSFORMERS.

CAUTION

USE COPPER CONDUCTORS ONLY! 75C

UNIT TERMINALS ARE NOT DESIGNED TO ACCEPT OTHER TYPES OF CONDUCTORS.

FAILURE TO DO SO MAY CAUSE DAMAGE TO THE EQUIPMENT.

ATTENTION

N'UTILISER QUE DES CONDUCTEURS EN CUIVRE!

LES BORNES DE L'UNITÉ NE SONT PAS CONÇUES POUR RECEVOIR D'AUTRES TYPES DE CONDUCTEURS.

L'UTILISATION DE TOUT AUTRE CONDUCTEUR PEUT ENDOMMAGER L'ÉQUIPEMENT.

PRECAUCIÓN

¡UTILICE ÚNICAMENTE CONDUCTORES DE COBRE!

LAS TERMINALES DE LA UNIDAD NO ESTÁN DISEÑADAS PARA ACEPTAR OTROS TIPOS DE CONDUCTORES.

SI NO LO HACE, PUEDE OCASIONAR DAÑO AL EQUIPO.

DESIGNER:	T. PEED
ENGINEER:	D. MACVICAR
TRANE © DATE:	10/18/22
REPLACES:	--
SIMILAR TO:	--
REVISION DATE:	4/4/2023
REVISED BY:	T. PEED
APPROVED BY:	--
CAD SYSTEM USED:	CREO SCHEMATICS

TRANE ®

THIS DRAWING IS PROPRIETARY AND SHALL NOT BE COPIED OR ITS CONTENTS DISCLOSED TO OUTSIDE PARTIES WITHOUT THE WRITTEN CONSENT OF TRANE.

PRECEDENT

UNIT SCHEMATIC; SHEET 1

POWER, DUAL COMPRESSOR, DUAL CONDENSER FAN, STD. SCCR SCCR

MASTER NUMBER:	DRAWING NUMBER:	SHEET:	REV
121343340001	12134334	1 OF 10	E