WIRE COLOR ABBREVIATION CODES			
CODE	COLOR	CODE	COLOR
BK	BLACK	PK	PINK
BL	BLUE	R	RED
BR	BROWN	TQ	TURQUOISE
G	GREEN	V	VIOLET
GY	GREY	W	WHITE
O	ORANGE	Y	YELLOW

LEGEND		
DEVICE DESIGNATION	DESCRIPTION	LINE NUMBER
1KF32	MODULE - EXPANSION	4
1KF1	MODULE - UNIT CONTROLS	49
1XD7	TERMINAL BLOCK - 115VAC COM	35
1XD6	TERMINAL BLOCK - 115VAC	35
1T7	TRANSFORMER - 24V EXP MODULE	38

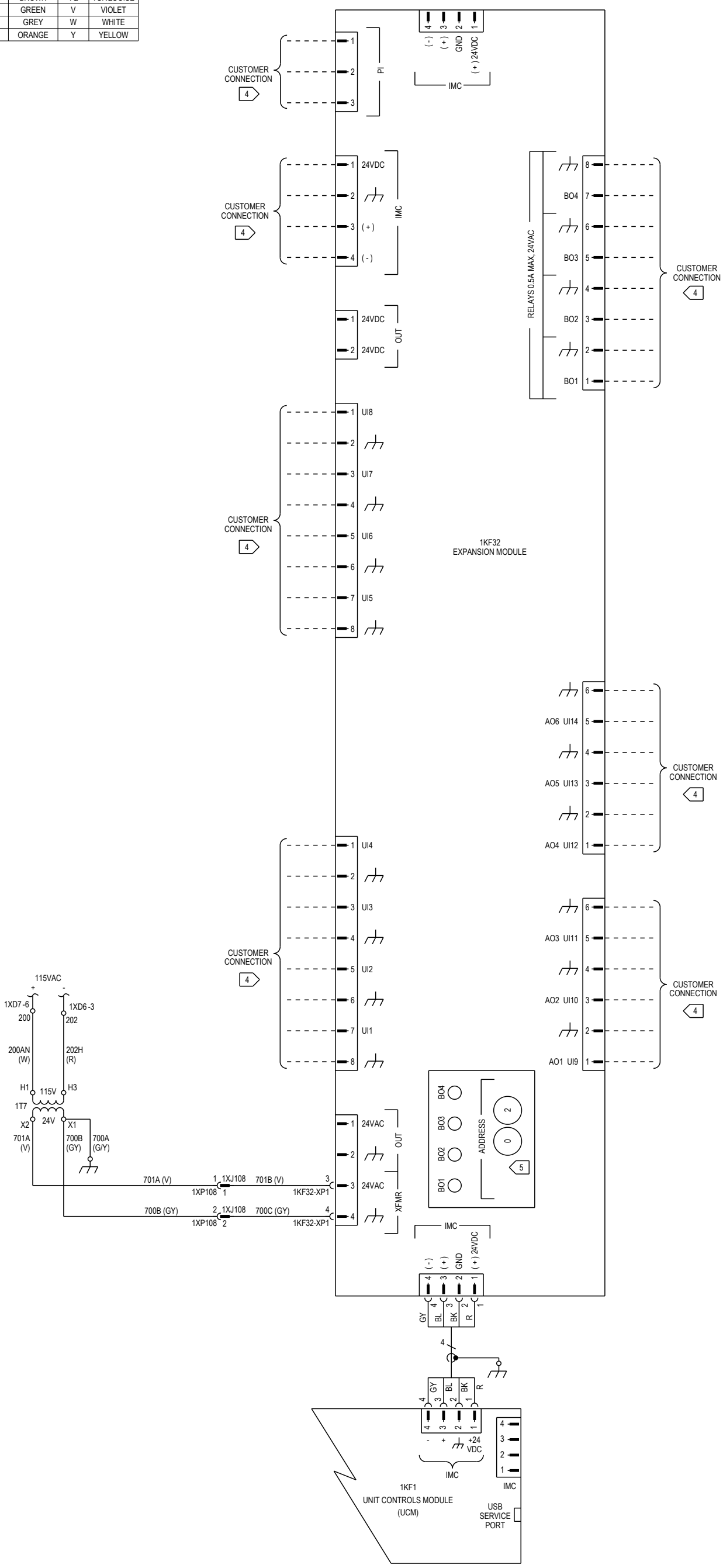

NOTES:

1. DASHED LINES INDICATE FIELD WIRING BY OTHERS. SOLID LINES INDICATE WIRING BY TRANE.
2. ALL FIELD WIRING MUST BE IN ACCORDANCE WITH THE NATIONAL ELECTRICAL CODE (NEC), STATE AND LOCAL REQUIREMENTS.
3. COMMUNICATION WIRE MUST BE TRANE PART NO.400-20-28 OR EQUIVALENT. MAXIMUM FOOT AGGREGATE RUN. CAUTION DO NOT RUN POWER IN THE SAME CONDUIT/WIRE BUNDLE WITH COMMUNICATION LINK.

4 CUSTOMER PROVIDED DRY CONTACTS SHOULD BE RATED FOR 5VDC/~5mA CONTROL CIRCUIT.

5 1KF32 ADDRESS DIALS MUST BE SET TO "02".

DESIGNER:	K. EDWARDS	TRANE ®	INTELLIPAK III DIAGRAM			
ENGINEER:	S. MCKINLEY		CONTROLS SCHEMATIC - 20-85T EXPANSION MODULE			
TRANE © DATE:	6/03/19	THIS DRAWING IS PROPRIETARY AND SHALL NOT BE COPIED OR ITS CONTENTS DISCLOSED TO OUTSIDE PARTIES WITHOUT THE WRITTEN CONSENT OF TRANE.				
REPLACES:	--		MASTER NUMBER:	DRAWING NUMBER:	SHEET:	REV
SIMILAR TO:	--			12133321	1 OF 1	A
REVISION DATE:	--					
REVISED BY:	--					
APPROVED BY:	--					
CAD SYSTEM USED:	PRO/ DIAGRAM	IEC DESIGN COMPLIANT				