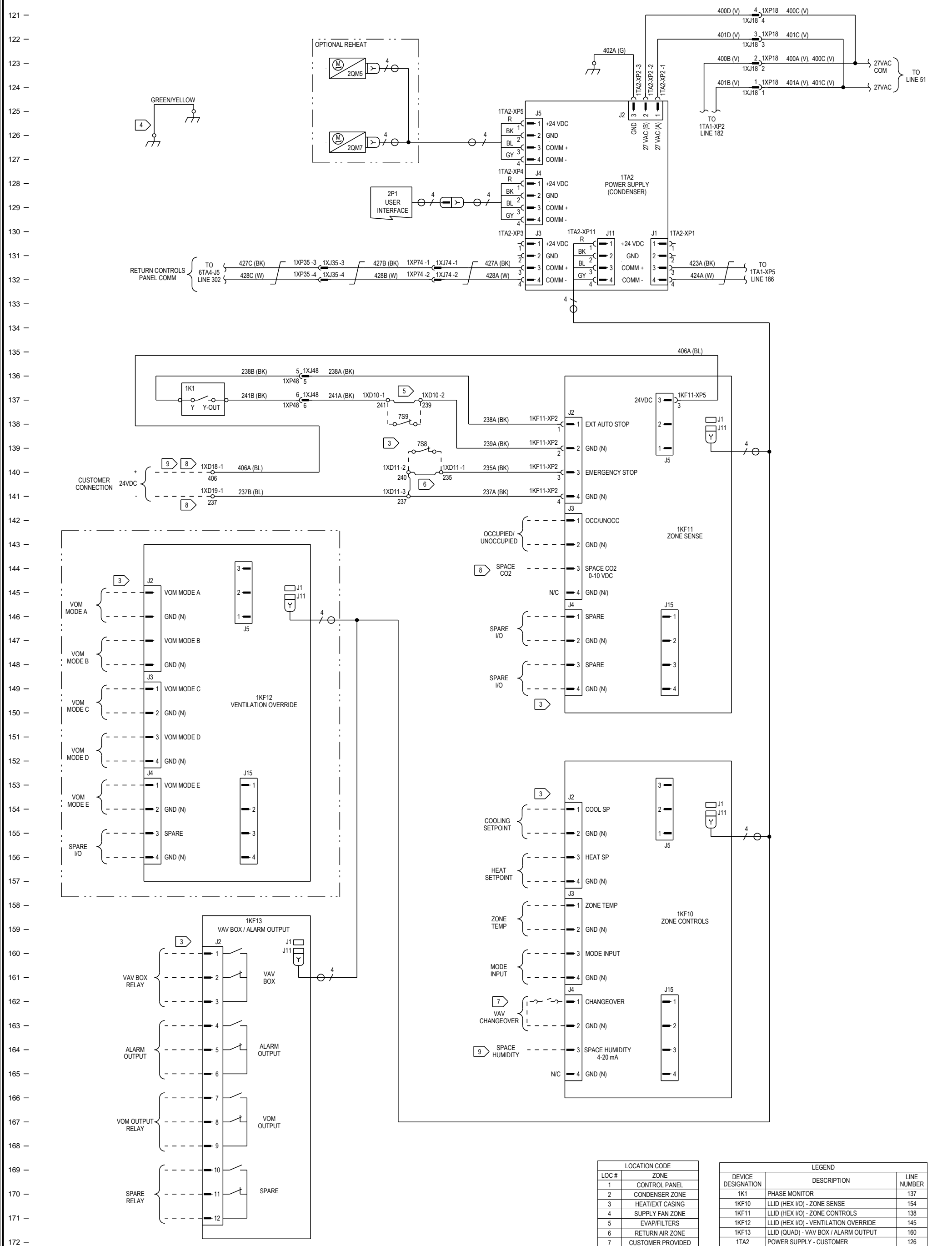

LOCATION CODE	
LOC #	ZONE
1	CONTROL PANEL
2	CONDENSER ZONE
3	HEAT/EXT CASING
4	SUPPLY FAN ZONE
5	EVAP/FILTERS
6	RETURN AIR ZONE
7	CUSTOMER PROVIDED

WIRE COLOR ABBREVIATION CODES			
CODE	COLOR	CODE	COLOR
BK	BLACK	PK	PINK
BL	BLUE	R	RED
BR	BROWN	TQ	TURQUOISE
G	GREEN	V	VIOLET
GY	GREY	W	WHITE
O	ORANGE	Y	YELLOW

LEGEND		
DEVICE DESIGNATION	DESCRIPTION	LINE NUMBER
1K1	PHASE MONITOR	137
1KF10	LLID (HEX I/O) - ZONE SENSE	154
1KF11	LLID (HEX I/O) - ZONE CONTROLS	138
1KF12	LLID (HEX I/O) - VENTILATION OVERRIDE	145
1KF13	LLID (QUAD) - VAV BOX / ALARM OUTPUT	160
1TA2	POWER SUPPLY - CUSTOMER	126
1XD10	TERMINAL BLOCK - EXT AUTO STOP	137
1XD11	TERMINAL BLOCK - EMERGENCY STOP	140,141
1XD18	TERMINAL BLOCK - 24VDC CUST CONN	140
1XD19	TERMINAL BLOCK - 24VDC COM CUST CONN	141
2P1	USER INTERFACE	129
2QM5	VALVE - REHEAT	123
2QM7	VALVE - COOLING	126
7S8	EMERGENCY STOP	139
7S9	EXTERNAL AUTO STOP	138

NOTES:

1. UNLESS OTHERWISE NOTED, ALL SWITCHES ARE SHOWN AT 25° C (77° F), AT ATMOSPHERIC PRESSURE, AT 50% RELATIVE HUMIDITY, WITH ALL UTILITIES TURNED OFF, AND AFTER A NORMAL SHUTDOWN HAS OCCURRED.
2. DASHED LINES INDICATE RECOMMENDED FIELD WIRING BY OTHERS. DASHED LINE ENCLOSURES AND/OR DASHED DEVICE OUTLINES INDICATE COMPONENTS PROVIDED BY THE FIELD. PHANTOM LINE ENCLOSURES INDICATE ALTERNATE CIRCUITRY OR AVAILABLE SALES OPTIONS. SOLID LINE INDICATES WIRING BY TRANE CO.

3 USE COPPER CONDUCTORS ONLY. UNIT TERMINALS ARE NOT DESIGNED TO ACCEPT OTHER TYPES OF CONDUCTORS. FAILURE TO DO SO MAY CAUSE DAMAGE TO THE EQUIPMENT.

4 GROUND LOW VOLTAGE PANEL TO MAIN CONTROL BOX.

5 REMOVE JUMPER AND INSTALL EXTERNAL AUTO/STOP WHEN REQUIRED.

6 FOR EMERGENCY STOP, REMOVE JUMPER BETWEEN 1XD11-1 AND 1XD11-2 AND INSTALL FIELD PROVIDED DEVICE.

7 CUSTOMER SUPPLIED VAV CHANGEOVER RELAY/CONTACTS REQUIRED ON MODULATING GAS HEAT UNITS FOR OPERATION OF OCCUPIED VAV HEAT MODE.

8 FOR SPACE CO2 OPERATION, CONNECT FIELD INSTALLED SENSOR TO 1KF11-J3, 1XD18 AND 1XD19 AS SHOWN.

9 FOR SPACE HUMIDITY OPERATION, CONNECT FIELD INSTALLED SENSOR (+) TO 1XD18 AND (-) TO 1KF10-J4 AS SHOWN.

DESIGNER:	K. EDWARDS
ENGINEER:	S. MCKINLEY
TRANE © DATE:	05/14/2019
REPLACES:	12132586-C
SIMILAR TO:	--
REVISION DATE:	--
REVISED BY:	--
APPROVED BY:	--
CAD SYSTEM USED:	PRO/ DIAGRAM

TRANE ®

THIS DRAWING IS PROPRIETARY AND SHALL NOT BE COPIED OR ITS CONTENTS DISCLOSED TO OUTSIDE PARTIES WITHOUT THE WRITTEN CONSENT OF TRANE.

IEC DESIGN COMPLIANT

INTELLIPAK

DIAGRAM

CONTROLS SCHEMATIC - 20T-75T
FIELD WIRING AND
CONDENSER CONTROLS

MASTER NUMBER:	DRAWING NUMBER:	SHEET:	REV
	12133319	3 OF 7	A