APPROVED 05/Oct/2018 21:03:49 GMT

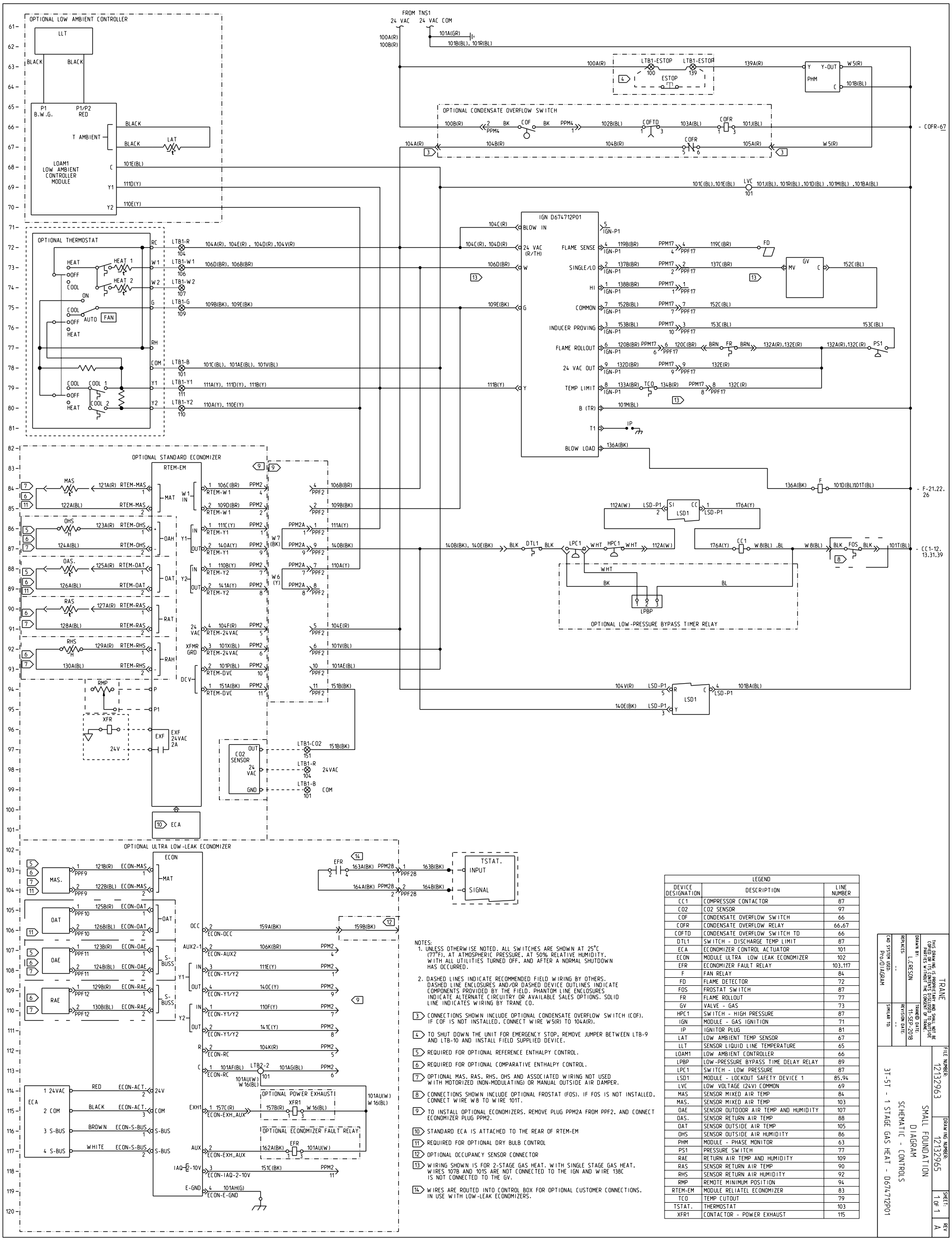

NOTES:

1. UNLESS OTHERWISE NOTED. ALL SWITCHES ARE SHOWN AT 25°C (77°F), AT ATMOSPHERIC PRESSURE. AT 50% RELATIVE HUMIDITY, WITH ALL UTILITIES TURNED OFF. AND AFTER A NORMAL SHUTDOWN HAS OCCURRED.
2. DASHED LINES INDICATE RECOMMENDED FIELD WIRING BY OTHERS. DASHED LINE ENCLOSURES AND/OR DASHED DEVICE OUTLINES INDICATE COMPONENTS PROVIDED BY THE FIELD. PHANTOM LINE ENCLOSURES INDICATE ALTERNATE CIRCUITRY OR AVAILABLE SALES OPTIONS. SOLID LINE INDICATES WIRING BY TRANE CO.

3 CONNECTIONS SHOWN INCLUDE OPTIONAL CONDENSATE OVERFLOW SWITCH (COF). IF COF IS NOT INSTALLED. CONNECT WIRE W5(R) TO 104A(R).

4 TO SHUT DOWN THE UNIT FOR EMERGENCY STOP. REMOVE JUMPER BETWEEN LTB-9 AND LTB-10 AND INSTALL FIELD SUPPLIED DEVICE.

5 REQUIRED FOR OPTIONAL REFERENCE ENTHALPY CONTROL.

6 REQUIRED FOR OPTIONAL COMPARATIVE ENTHALPY CONTROL.

7 OPTIONAL MAS. RAS. RHS. OHS AND ASSOCIATED WIRING NOT USED WITH MOTORIZED (NON-MODULATING) OR MANUAL OUTSIDE AIR DAMPER.

8 CONNECTIONS SHOWN INCLUDE OPTIONAL FROSTAT (FOS). IF FOS IS NOT INSTALLED. CONNECT WIRE W8 TO WIRE 101T.

9 TO INSTALL OPTIONAL ECONOMIZERS. REMOVE PLUG PPM2A FROM PPF2. AND CONNECT ECONOMIZER PLUG PPM2.

10 STANDARD ECA IS ATTACHED TO THE REAR OF RTEM-EM

11 REQUIRED FOR OPTIONAL DRY BULB CONTROL

12 OPTIONAL OCCUPANCY SENSOR CONNECTOR

13 WIRING SHOWN IS FOR 2-STAGE GAS HEAT. WITH SINGLE STAGE GAS HEAT. WIRES 107B AND 101S ARE NOT CONNECTED TO THE IGN AND WIRE 138C IS NOT CONNECTED TO THE GV.

14 WIRES ARE ROUTED INTO CONTROL BOX FOR OPTIONAL CUSTOMER CONNECTIONS. IN USE WITH LOW-LEAK ECONOMIZERS.

LEGEND

DEVICE DESIGNATION	DESCRIPTION	LINE NUMBER
CC1	COMPRESSOR CONTACTOR	87
CO2	CO2 SENSOR	97
COF	CONDENSATE OVERFLOW SWITCH	66
COFR	CONDENSATE OVERFLOW RELAY	66.67
COFTD	CONDENSATE OVERFLOW SWITCH TD	66
DTL1	SWITCH - DISCHARGE TEMP LIMIT	87
ECA	ECONOMIZER CONTROL ACTUATOR	101
ECON	MODULE ULTRA LOW LEAK ECONOMIZER	102
EFR	ECONOMIZER FAULT RELAY	103.117
F	FAN RELAY	84
FD	FLAME DETECTOR	72
FOS	FROSTAT SWITCH	87
FR	FLAME ROLLOUT	77
GV	VALVE - GAS	73
HPC1	SWITCH - HIGH PRESSURE	87
IGN	MODULE - GAS IGNITION	71
IP	IGNITOR PLUG	81
LAT	LOW AMBIENT TEMP SENSOR	67
LLT	SENSOR LIQUID LINE TEMPERATURE	65
LOAM1	LOW AMBIENT CONTROLLER	66
LPBP	LOW-PRESSURE BYPASS TIME DELAY RELAY	89
LPC1	SWITCH - LOW PRESSURE	87
LSD1	MODULE - LOCKOUT SAFETY DEVICE 1	85.94
LVC	LOW VOLTAGE (24V) COMMON	69
MAS	SENSOR MIXED AIR TEMP	84
MAS.	SENSOR MIXED AIR TEMP	103
OAE	SENSOR OUTDOOR AIR TEMP AND HUMIDITY	107
OAS.	SENSOR RETURN AIR TEMP	88
OAT	SENSOR OUTSIDE AIR TEMP	105
OHS	SENSOR OUTSIDE AIR HUMIDITY	86
PHM	MODULE - PHASE MONITOR	63
PS1	PRESSURE SWITCH	77
RAE	RETURN AIR TEMP AND HUMIDITY	109
RAS	SENSOR RETURN AIR TEMP	90
RHS	SENSOR RETURN AIR HUMIDITY	92
RMP	REMOTE MINIMUM POSITION	94
RTEM-EM	MODULE RELIATEL ECONOMIZER	83
TCO	TEMP CUTOUT	79
TSTAT.	THERMOSTAT	103
XFR1	CONTACTOR - POWER EXHAUST	115

THIS DRAWING IS PROPRIETARY AND SHALL NOT BE COPIED OR ITS CONTENTS DISCLOSED TO OUTSIDE PARTIES WITHOUT THE CONSENT OF TRANE.

TRANE

DRAWN BY: L.LERSON
REPLACES: --
CAD SYSTEM USED: Pro/DIAGRAM
TRANE® DATE: 11-SEP-2018
REVISION DATE: --
SIMILAR TO: --

FILE NUMBER: 12132963
DRAWING NUMBER: 12132965
SHEET: 1 OF 1
REV: A

SMALL FOUNDATION DIAGRAM
SCHEMATIC - CONTROLS
3T-5T - 1 STAGE GAS HEAT - D674712P01