RELEASED 28/Jan/2019 14:23:17 GMT

WIRE COLOR ABBREVIATION CODES			
CODE	COLOR	CODE	COLOR
BK	BLACK	PK	PINK
BL	BLUE	R	RED
BR	BROWN	TQ	TURQUOISE
G	GREEN	V	VIOLET
GY	GREY	W	WHITE
O	ORANGE	Y	YELLOW

LEGEND

DEVICE DESIG	DESCRIPTION	LINE NUMBER
3E6	HEATER ELEMENT	13,17,21,25,29,33
3F20	FUSEBLOCK	13
3F21	FUSEBLOCK	17
3KF31	HEAT CONTROLS	44
3QA25	CONTACTOR - HEAT CIRCUIT A	13,14,15,44
3QA26	CONTACTOR - HEAT CIRCUIT B	17,18,19,47
3QA31	CONTACTOR - BACK-UP	13,14,45
3QA32	CONTACTOR - BACK-UP	17,18,47
3QB4	MANUAL DISCONNECT - ELEC HEAT	10
3S10	HIGH TEMP LIMIT - MANUAL RESET	43
3S11	HIGH TEMP LIMIT - AUTO RESET #1	42
3S12	HIGH TEMP LIMIT - AUTO RESET #2	42
3S13	HIGH TEMP LIMIT - AUTO RESET #3	42
3XD16	TERMINAL BLOCK - 115 VAC	42
3XD17	TERMINAL BLOCK - 115 VAC COM	43
3XD5	TERMINAL BLOCK	10

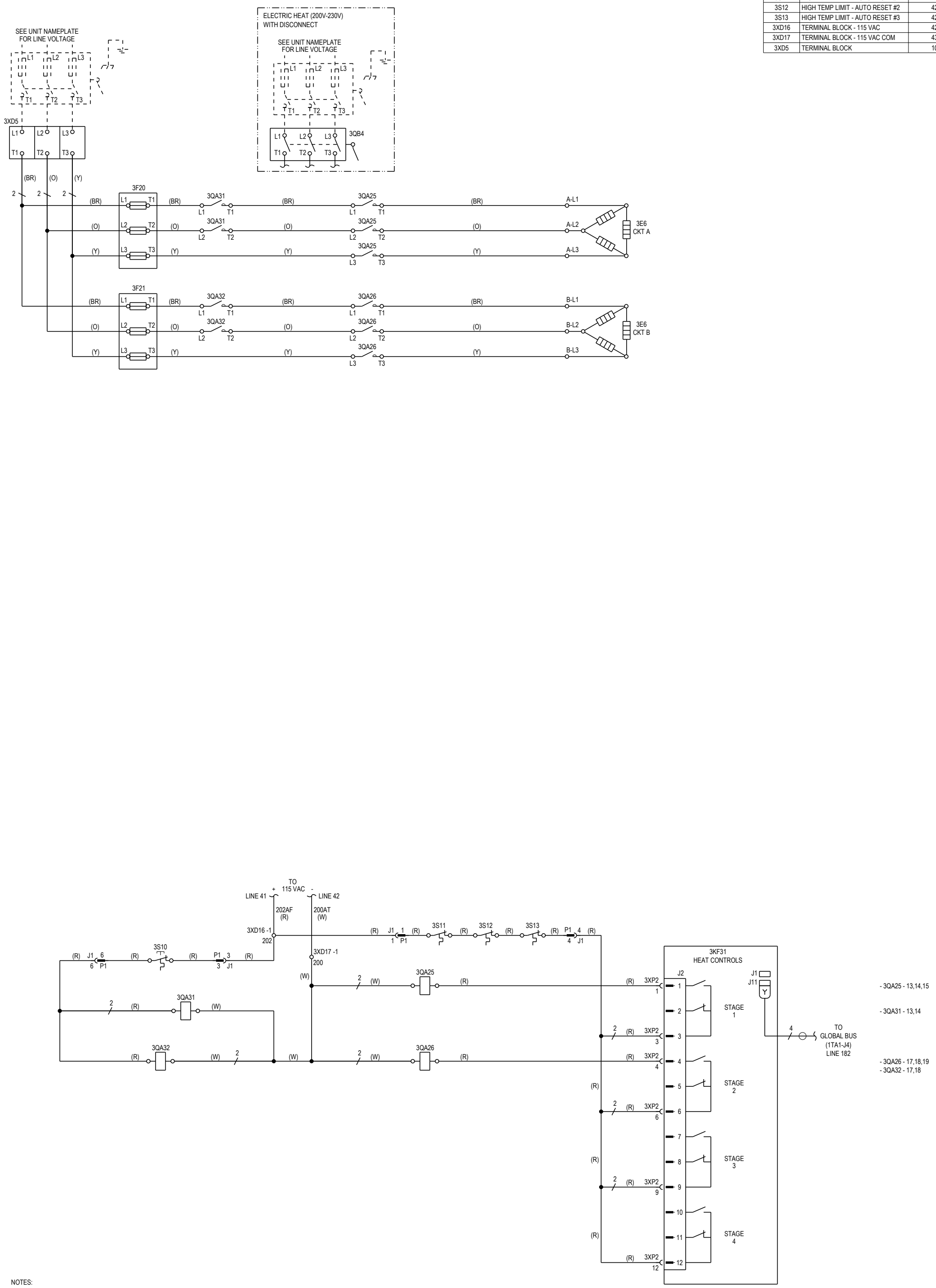

NOTES:

1. UNLESS OTHERWISE NOTED, ALL SWITCHES ARE SHOWN AT 25° C (77° F), AT ATMOSPHERIC PRESSURE, AT 50% RELATIVE HUMIDITY, WITH ALL UTILITIES TURNED OFF, AND AFTER A NORMAL SHUTDOWN HAS OCCURRED.
2. DASHED LINES INDICATE RECOMMENDED FIELD WIRING BY OTHERS. DASHED LINE ENCLOSURES AND/OR DASHED DEVICE OUTLINES INDICATE COMPONENTS PROVIDED BY THE FIELD. PHANTOM LINE ENCLOSURES INDICATE ALTERNATE CIRCUITRY OR AVAILABLE SALES OPTIONS. SOLID LINE INDICATES WIRING BY TRANE CO.
3. NUMBERS ALONG THE RIGHT SIDE OF THE SCHEMATIC DESIGNATE THE LOCATION OF CONTACTS BY THE LINE NUMBER. AN UNDERLINED NUMBER INDICATES A NORMALLY CLOSED CONTACT. AN OPEN ARROW BELOW THE LINE NUMBER POINTING UPWARD INDICATES A TIMED CONTACT WHICH BEGINS TIMING WHEN ENERGIZED.

DESIGNER:	K. EDWARDS
ENGINEER:	R. ROBINSON
TRANE © DATE:	5/25/18
REPLACES:	- - -
SIMILAR TO:	- - - - - -
REVISION DATE:	10/29/18
REVISED BY:	K. EDWARDS
APPROVED BY:	R. ROBINSON
CAD SYSTEM USED:	PRO/ DIAGRAM

TRANE ®

THIS DRAWING IS PROPRIETARY AND SHALL NOT BE COPIED OR ITS CONTENTS DISCLOSED TO OUTSIDE PARTIES WITHOUT THE WRITTEN CONSENT OF TRANE.

IEC DESIGN COMPLIANT

INTELLIPAK

DIAGRAM

SCHEMATIC - ELECTRIC HEAT
30KW - 200V / 230V

MASTER NUMBER:	DRAWING NUMBER:	SHEET:	REV
12132834	12132836	1 OF 1	C