Product Catalog

VariTrane™ Fan-Powered

Series

VS*G, LS*F

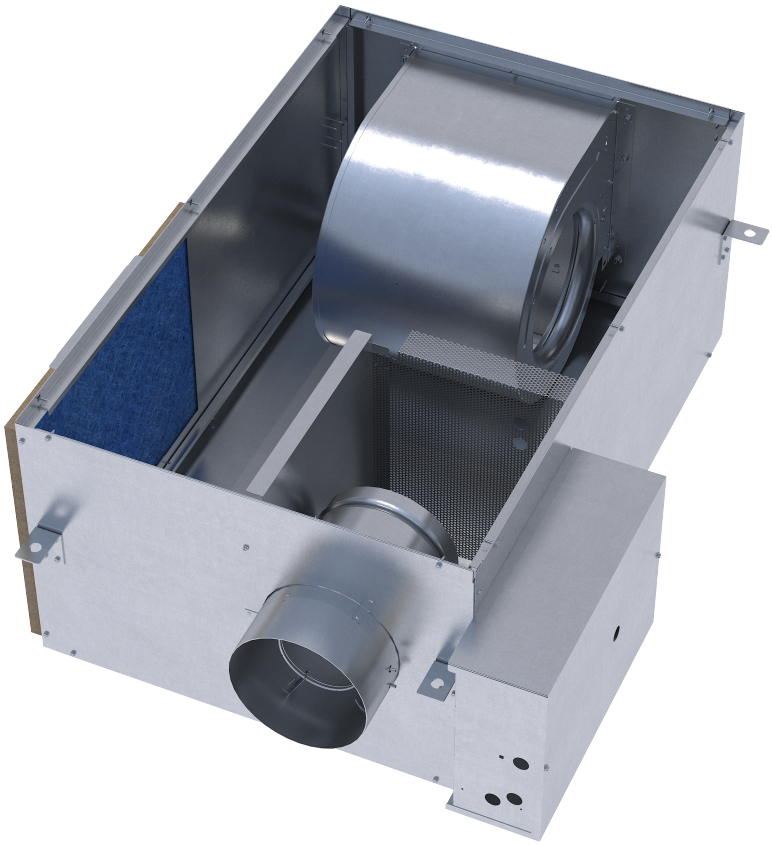

April 2025

VAV-PRC017C-EN

Introduction

This catalog include series fan-powered VAV terminals, including standard and low height models. As an option, these terminals can be equipped with hot-water heating coils or electric heaters.

Figure 1. Series fan-powered w/suppressor (VSCG)

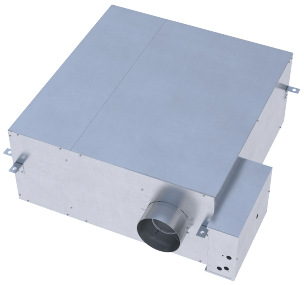

Figure 2. Series fan-powered w/suppressor (VSWG)

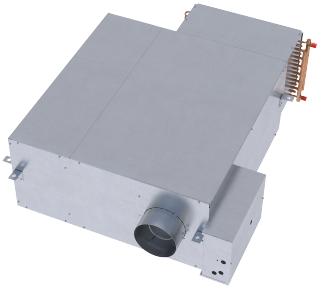

Figure 3. Series fan-powered w/suppressor (VSEG)

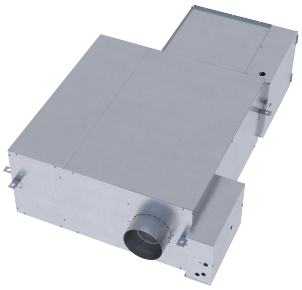

Figure 4. Low height series: LSCF

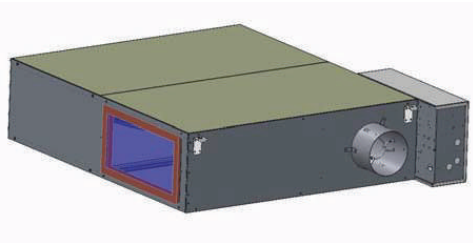

Figure 5. Low height series: LSWF

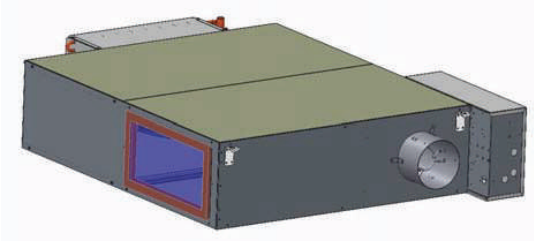

Figure 6. Low height series: LSEF

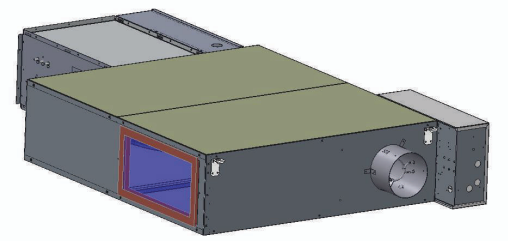

Copyright

This document and the information in it are the property of Trane, and may not be used or reproduced in whole or in part without written permission. Trane reserves the right to revise this publication at any time, and to make changes to its content without obligation to notify any person of such revision or change.

Trademarks

All trademarks referenced in this document are the trademarks of their respective owners.

Revision History

- Updated Dimensional Data drawings throughout.
- Updated Electrical Data to latest calculations.
- Removed references to Tracer® UC400.

Table of Contents

Features and Benefits . . . 7
- VariTrane . . . 7
- Energy Efficient Earthwise Systems . . . 7
- Casing Design . . . 8

Application Considerations . . . 12
- VAV Terminal Unit Types . . . 12
- Parallel vs. Series . . . 12
- Energy Savings . . . 14
- Flow Measurement and Control . . . 14
- Reheat Options . . . 16
- Insulation . . . 18
- Acoustics . . . 18
- Best Practices . . . 20
- VAV System and Product References . . . 21

Selection Procedure . . . 22
- Air Valve Selection . . . 22
- Heating Coil Selection . . . 22
- Fan Size and Selection . . . 23
- Acoustics . . . 23
- Selection Example – Series With Hot Water Heat and ECM . . . 24

Model Number Descriptions . . . 26
- Fan Powered VAV Units - Series . . . 26
- Fan Powered Low Height VAV Units - Series . . . 29

Performance Data . . . 32
- Series Fan-Powered Terminal Units . . . 32
- Low Height Series Fan-Powered Terminal Units . . . 41

DDC Controls . . . 45
Control Logic . . . 45
Space Temperature Control . . . 45
Air-Fi Wireless Communications Interface (WCI) . . . 46
Air-Fi® Wireless Communications Sensor (WCS) . . . 46
CO_2 Wall Sensor and Duct CO_2 Sensor . . . 47
DDC Zone Sensor . . . 47
Factory- or Field-wired Auxiliary Temperature Sensor . . . 48
Trane Control Valves . . . 48
Belimo Control Valves . . . 48
VAV Piping Package . . . 49
Differential Pressure Transducer . . . 49
Transformers . . . 49
Trane Actuator – 90 Second at 60 Hz Drive Time . . . 50
Belimo Actuator – 95 Second Drive Time . . . 50
Trane Spring Return Actuator . . . 50
Electric Heater Silicon-Controlled Rectifier (SCR) . . . 50
Controls Specifications . . . 50
Electrical Data . . . 51
Series Fan-Powered Terminal Units . . . 51
Formulas . . . 56
Acoustics Data . . . 57
Low Height Series Fan-Powered Terminal Units . . . 57
Dimensional Data . . . 63
Series Fan-Powered Terminal Units . . . 63
Low-Height Series Fan-Powered Terminal Units . . . 73

Mechanical Specifications: Fan-Powered 81
Casing 81
Agency Listing. 81
UL-Listed Products. 81
AHRI Certified Performance 81
Insulation 81
Primary Air Valve 81
Fan Motor 82
Fan Speed Control 82
Transformer. 82
Disconnect Switch 82
Outlet Connection. 82
Filter 83
Integral Suppressor Attenuator 83
Thinline Suppressor Attenuator 83
Hot Water Coil. 83
Electric Heat Coil 83
Direct Digital Controls 84
Unit Options. 84
Hot Water Valves 84

Features and Benefits

VariTrane

Parallel fan-powered units offer energy savings with intermittent fan control. The fan energizes only in heating mode when the space needs heat. When energized, the fan can be controlled for constant-speed or variable-speed operation. Additional energy savings are obtained by using warm plenum air for free reheat. Motor heat is never wasted in parallel units. They are an excellent choice when minimal zone heating is needed.

Series fan-powered units have fans which are always energized in occupied mode. When energized, the fan can be controlled for constant-speed or variable-speed operation. They are common in applications such as conference rooms, cafeterias, etc., that desire higher supply airflow rates at all conditions.

Energy Efficient Earthwise Systems

A significant consumer of energy in commercial buildings is heating and air conditioning.

Energy saving features include:

- Ventilation Optimization – Combines demand control ventilation (time of day schedule, an occupancy sensor, or a carbon dioxide sensor) at the zone level with ventilation reset at the system level. This will deliver the required amount of outdoor air to each zone, minimizing over ventilation.
- Fan Pressure Optimization – Reduces supply fan energy by intelligently reducing the pressure in the air distribution system to the lowest possible level without impacting occupant comfort.
- Night Setback – Reduces energy consumption during unoccupied periods by raising or lowering space temperature setpoints.
- Supply Air Temperature Reset – Reduces overall system energy use (balancing reduced cooling and reheat energy with increased fan energy) by raising the supply air temperature at part load, while avoiding elevated space humidity levels.
- Electrically Commutated Motors (ECM) – Improve the efficiency of fan-powered VAV units.
- Low Temperature Air Distribution – Can decrease overall system energy use by reducing airflow and fan energy needed to move that air through the system.

To determine the potential energy savings a VAV system can bring to your applications, Trane offers energy-modeling software like System Analyzer™ and Trace 3D Plus.

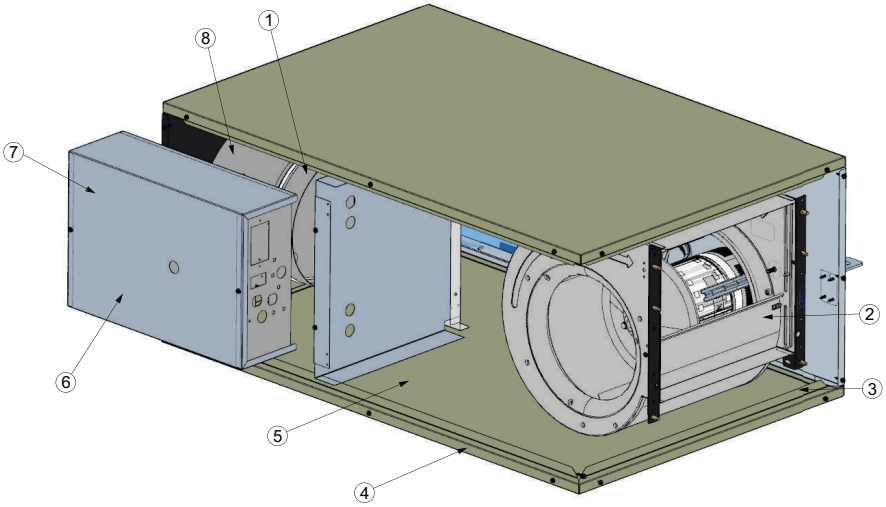

1	Rugged Air Valve – Trane air valves are heavy gage steel with a continuously welded seam to limit inlet deformation. This provides consistent and repeatable airflow across the flow ring with performance you can count on.
2	Technologically Advanced SQ Units – Super-quiet (SQ) fan/motor/wheel assemblies are engineered as an air delivery system to provide efficiency.

3	Interlocking Panels – Patent-pending interlocking panels are designed using integral I-beam construction technology to create product rigidity. For exposed ceiling applications the exterior is smooth with few exposed screws. VariTrane™ units are designed for use in systems that operate up to 5 inches w.c. inlet static pressure.
4	Metal Encapsulated Edges – All VariTrane™ units include encapsulated edges to arrest cut fibers and prevent insulation erosion into the air stream. This is important for applications with fiberglass erosion and projects with either double-wall or externally wrapped duct work.
5	Full Range of Insulation – For optimal acoustical performance or cleanability, insulation options include, double-wall, matte-faced, foil-faced, closed cell.
6	Service Friendly: • Internal shaft visible through control box cover sight hole for blade orientation verification. • Same-side NEC jumpback clearance provides all high-voltage and low-voltage components on the same side to minimize field labor. • SQ fan-powered units have improved accessibility to internal components. Sliding panels are standard for a technician to safely service.
7	Control Flexibility – Trane VAVs offer factory installed, tested, and commissioned Trane BACnet® controllers. Trane can also factory mount and wire 3rd party controllers.
8	Flow Ring – Housed and recessed within the air valve to reduce the potential for damage during shipping and on the job site. The patented flow ring has been tested to perform under the most demanding conditions.

Casing Design

18-gauge cylinder	• Limits damage during shipment and job handling. • Provides even airflow distribution across the flow ring.
External shaft	• Provides controller flexibility. • Designed to facilitate actuator field replacement.
Position indicator	• Shows current air valve position to aid in system commissioning. • Visible from the floor.
External actuator	Increases serviceability, control system compatibility, and actuator clutch access for simplified commissioning.

Indoor Air Quality (IAQ) Features

System design should consider applicable ventilation and IAQ standards.

- Provide the required amount of outdoor air to each zone during all operating conditions.
- Limit particulates from entering occupied spaces.
- Allow proper access for periodic cleaning.

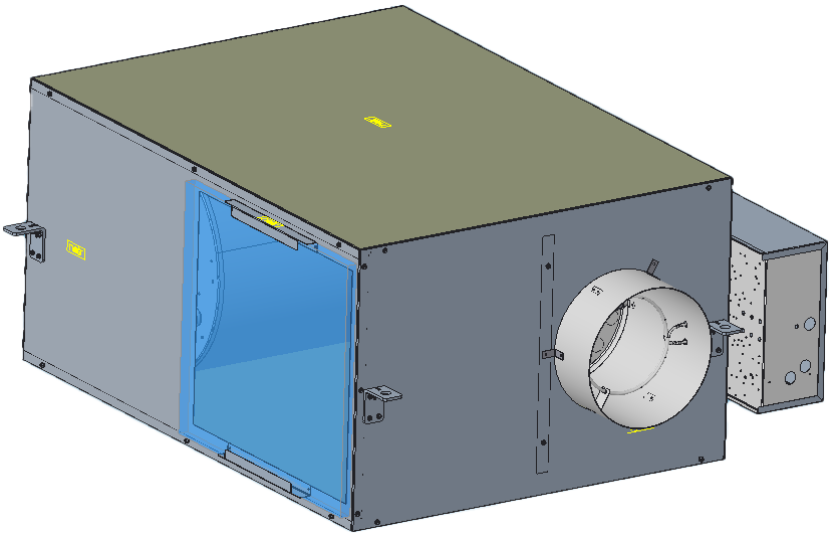

Table 1. Insulation options

Matte-faced	Typical industry standard with reduced first cost.
Closed-cell	• R-value and performance equivalent to matte-faced insulation. • Main difference is the reduction of water vapor transmission. • Closed-cell designed for use in installations with a high chance of water formation.
Foil-faced	Fiberglass insulation with a thin aluminum coating on the air stream side to prevent fibers from becoming airborne.
Double-wall	• Premium insulation with insulation locked between metal liners. • Eliminates the possibility for insulation entering the airstream. • Allows for unit interior wipe-down as needed.
LEED wrap option	• Pressure sensitive covering that prevents contamination of the VAV box during the construction phase. • Seal all openings without constraining the installation process.

Tracer Building Automation System

Tracer® Building Automation Systems ensure comfort within your building.

Building controls have a bigger job description than they did a few years ago. It's no longer enough to control heating and cooling systems and equipment. Sophisticated buildings require smarter technology that will carry into the future. Tracer controls provide the technology platform – mobile, easy-to-use, cloud-based, scalable and open - for the next generation of data-driven, technology-enabled services that are creating high performance buildings.

With a Trane Tracer Building Automation System, will:

- Reduce operating costs through energy management strategies.
- Consistently provide occupant comfort.
- Enjoy reliable operation with standard, pre-engineered, and pretested applications.
- Easily troubleshoot and monitor either on site or from a remote location.
- Reduce installation time and simplify troubleshooting.

Trane offers a wide range of factory or field installed controllers for a variety of applications. These units are compatible with a variety of building types and can be used for new construction or renovation. Through extensive usability testing internally and with building operators, controls are designed for ease of use.

Tracer BACnet® Controllers

Trane offers a full line of programmable BACnet controllers designed for simple integration into any system which can communicate via the BACnet protocol. Controllers are factory-programmed, commissioned, and shipped ready to be installed.

Air-Fi® Wireless System

For more detailed information on Air-Fi Wireless systems and devices, see:

- *Air-Fi® Wireless System Installation, Operation, and Maintenance* (BAS-SVX40*-EN)
- *Air-Fi® Wireless System Data Sheet Product Data* (BAS-PRD021*-EN)
- *Air-Fi® Network Design Installation, Operation, and Maintenance* (BAS-SVX55*-EN)

Air-Fi® Wireless Communications Interface (WCI)

A factory-installed Air-Fi Wireless Communications Interface (WCI) provides wireless communication between the Tracer® SC, Tracer® UC210, Symbio™ 210/Symbio™ 500 VAV unit controllers and optionally, Air-Fi Wireless Communication sensors.
The Air-Fi WCI's wireless mesh network is the perfect alternative to a wired communication link. Eliminating the low-voltage wire between the zone sensor and the terminal unit controller, and between the unit controllers and the system controller will:

- Reduced installation time and associated risks.
- Completion of projects with fewer disruptions.
- Easier and more cost-effective re-configurations, expansions, and upgrades.

Air-Fi® Wireless Communication Sensor (WCS)

The Wireless Communications Sensor (WCS) communicates wirelessly to a Tracer® BACnet® unit controller that has an Air-Fi WCI installed. A WCS is an alternative to a wired sensor when access and routing of communication cable are issues. It also allows flexible mounting and relocation. Also available are a non-display version of the WCS with a temperature setpoint knob, an occupancy / CO_2 sensor / zone temperature version of the WCS, and a relative humidity (RH) sensor add-on board accessory.

Factory-installed vs. Factory-commissioned

The terms factory-installed and factory-commissioned are often used interchangeably. The following table differentiates these.

Factory-commissioned quality on VariTrane™ units is available on any manufacturer's control system that can communicate using BACnet® protocol.

Table 2. Factory-installed vs. factory-commissioned

	Factory-installed	Factory-commissioned
Transformer installed (option)	X	X
Wires terminated in reliable/consistent setting	X	X
Controller mounted	X	X

Table 2. Factory-installed vs. factory-commissioned (continued)

	Factory-installed	Factory-commissioned
Electric heat contactors and fan relay wired	X	X
Testing of electric heat contactors and fan relay	—	X
Controller addressing and associated testing	—	X
Minimum and Maximum airflows settings (occupied/unoccupied)	—	X
Minimum and Maximum temperature setpoints (occupied/unoccupied)	—	X
Minimum ventilation requirements	—	X
Heating offset	—	X
Trane Air-Fi® wireless communications modules (WCI)	X	X
Duct temperature sensor	X	X
Pre-wired water valve harness	X	X

Trane VAV Systems – VariTrane DDC Controls

VariTrane™ DDC controls simplify control strategies by pre-engineering control logic and sequencing into the controller. This information is available via a twisted-shielded wire pair or wireless communication, and accessible via a Trane Tracer® SC.

Optimized system control strategies, such as ventilation optimization, fan-pressure optimization, and optimal start/stop, are pre-engineered in VariTrane unit-level DDC controllers and the Tracer SC building automation system.

This allows a Trane VAV system to meet or exceed the latest ASHRAE 90.1 Energy Efficiency standards. Pre-engineered controls allow consistent, high quality installations.

Purchasing VAV controllers and VAV hardware from a single manufacturer provides a single contact for all HVAC system related questions.

Application Considerations

See *Applications Engineering Manual, Rooftop VAV Systems* (SYS-APM007*-EN).

VAV Terminal Unit Types

Parallel Fan-Powered

Parallel fan-powered units are commonly used in zones which require some degree of heat during occupied hours when the primary supply air is cool. The terminal unit fan is in parallel with the central unit fan; no primary air from the central fan passes through the terminal unit fan. The terminal unit fan draws air from the space ceiling plenum.

When no heat is needed, the local parallel fan is off and a backdraft damper on the fan's discharge is closed to prevent cool air entry into the plenum. When cool primary airflow to the zone is at a minimum and the zone temperature drops below heating setpoint, the local parallel fan is turned on and the backdraft damper opens. The fan can deliver either a constant or variable volume of warm plenum air, which is mixed with cool primary air at a minimum flow. Remote heat or terminal reheat can provide additional local heating.

For more information, see *VariTrane™ Fan-Powered Parallel VP*F, LP*F Product Catalog (VAV-PRC012*-EN)*.

Series Fan-Powered

Series fan-powered terminal units are used commonly in VAV zones that require heat during occupied hours and design higher supply airflows during all conditions. The terminal unit fan is in series with the central fan. Primary air from the central fan always passes through the terminal unit fan.

The local series fan within the terminal unit operates whenever the unit is in the occupied mode. The fan can deliver either a constant or variable volume of air to the zone. As the zone requires less cooling, the primary air damper closes. As the primary air damper closes, the air mixture supplied to the zone contains less cool air and more warm plenum air. Remote heat or terminal reheat can provide additional local heating.

Series fan-powered terminal units are also useful in low supply air temperature systems, since the terminal unit fan can be sized so that warm plenum air is always mixed with low temperature supply air. This raises the supply air temperature to an acceptable distribution level and reduces condensation potential.

Low-Height Fan-Powered

Low-height fan-powered terminal units are a slightly modified version of a fan-powered terminal unit. As its name suggests, the low-height fan-powered unit has a shorter height dimension to accommodate applications where ceiling space is limited. Low acoustic levels are more challenging in these low ceiling space applications due to the reduced radiated ceiling plenum effect.

The operation of the low-height terminal unit is exactly the same as that of a series or parallel terminal unit, as are the options for high-efficiency ECMs, insulation options, etc. As with the other fan-powered terminal units, additional local heating can be provided by remote heat or terminal reheat.

Parallel vs. Series

In many climates, fan-powered systems are a lower operating cost alternative than single-duct systems. The energy inefficiencies inherent in reheating cold primary air can be eliminated with a key design characteristic of fan-powered terminal units, plenum air heating. Heating with warmer plenum air allows for recovery of heat from lighting and other heat sources in the building.

Comparison of Parallel and Series Models

Once it has been determined that a fan-powered system is to be specified, the designer must decide between parallel and series configurations. Each model carries its own characteristics of delivered airflow, energy consumption, and acoustics. For the end user, the designer might consider three goals: a comfortable and productive tenant environment, acceptable installed cost, and low operating costs.

Parallel and series fan-powered terminal units offer specific advantages for particular applications. The table which follows in this section compares the key similarities and differences between the models that the designer should consider in performing an engineering analysis.

Typical Application of Parallel Units

Parallel intermittent fan-powered terminal units are very common in perimeter zones or buildings where loads vary during occupied hours. Core zones, which maintain a more constant cooling requirement, are better suited for variable airflow (single-duct) units. Typical jobs combine parallel fan-powered units (exterior) and single-duct units (interior) to provide an efficient system with lowest first cost. Although the overall NC of parallel systems is lower than an equivalent series system, the intermittent fan is sometimes noticed when energized. To minimize the impact of this NC change, an ECM (Electrically Commutated Motor) can be used which has soft-start technology.

Typical Application of Series Units

Applications requiring constant air movement or blending utilize series constant fan-powered terminal units. Conference rooms, laboratories, and lobbies are common applications. Because the series fan also adds to the system external static pressure, office buildings take advantage of this design feature and down size main air handling equipment. Finally, series terminals are used in low-temperature air systems to temper cold primary air with warm plenum air and deliver it to the zone.

Table 3. Parallel vs. series

	Parallel	Series
Fan Operation	Intermittent operation during occupied and unoccupied modes.	Continuous operation during the occupied modes. Intermittent operation during unoccupied mode.
Operating Sequence	Variable-volume, constant-temperature device during cooling. Constant-volume, variable-temperature during heating.	Constant-volume, variable-temperature device at all times. Delivers design airflow regardless of the load.
Fan Energization	Based on zone temperature deviation from setpoint. No interlock with central system fan required.	Interlocked with central system fan to deliver required air to the zone in both heating and cooling modes.
Terminal Fan Operating and Size	Fan runs during heating load. Size for design heating load. Typically this is 40 to 60% of design primary cooling airflow.	Fan runs continually. Fan sizing should meet the greater of design cooling or heating airflow to the zone.
Air valve Sizing	Design cooling airflow.	Design cooling airflow.
Minimum Inlet Static Pressure Required for Central Fan Sizing	Sufficient to overcome unit, heating coil, downstream duct and diffuser pressure losses.	Sufficient to overcome air valve pressure loss only.
Acoustics	When operating under cooling loads the terminal fan does not run, offering superior acoustic performance similar to single-duct VAV. Under heating loads, the fan operates intermittently. Acoustical impact can be minimized by use of a ECM.	Produces slightly higher background sound pressure levels in the occupied space. This sound level remains constant and is less noticeable than intermittent fan operation with PSC motors.

Figure 7. Parallel and series fan-powered terminal

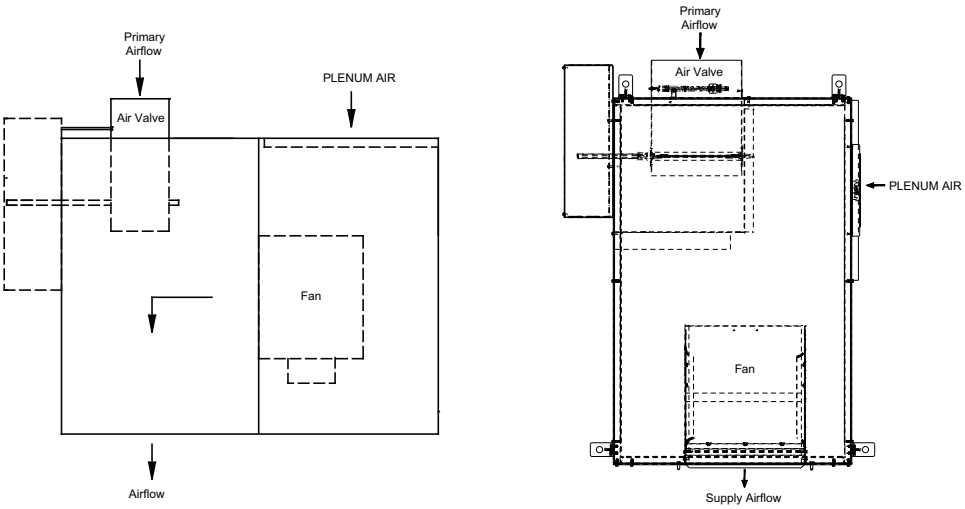

PARALLEL FAN-POWERED TERMINAL SERIES FAN-POWERED TERMINAL

Energy Savings

Electrically Commutated Motor

The optional ECM provides an additional energy-saving option to the system designer. Some of the advantages of the motor include high efficiency, variable-speed operation, quiet operation, short payback, and easy installation. There are several considerations that need to be addressed when deciding whether to use these motors or not. The primary benefit may be seen as increased efficiency.

Operating Hours – The added cost of an ECM can be offset more quickly in applications which require a relatively high number of hours of operation. However, if a space does not require extensive running time for the unit fan, then it may not be a good candidate for this type of motor based solely on payback. Therefore, the decision about using the ECM may be based on other benefits, depending on the needs of the customer.

Airflow Flexibility – The ECM allows a greater airflow range per fan size. If a space is going to change uses and load components frequently, the ability to change supply airflow with the ECM without changing units will be a benefit.

Airflow Balancing – The ability of the ECM motor to self-balance to an airflow regardless of pressure can be an asset when trying to air balance a job. This will help eliminate additional dampers or changes to downstream ductwork to ensure proper airflow. For more information, please contact your local Trane sales engineer.

Flow Measurement and Control

One of the most important characteristics of a VAV terminal unit is its ability to accurately sense and control airflow. The VariTrane™ terminal unit was developed with exactly that goal in mind. The patented, multiple-point, averaging flow ring measures the velocity of the air at the unit primary air inlet.

The differential pressure signal output of the flow ring provides the terminal unit controller a measurement of the primary airflow through the inlet. The terminal unit controller then opens or closes the inlet damper to maintain the controller airflow setpoint.

Flow Measurement

Most of these terminal units contain a differential pressure airflow measurement device, mounted at the primary air inlet, to provide a signal to the terminal unit controller. Numerous names exist for the differential pressure measurement device-flow sensor, flow bar, flow ring. The differential pressure measured at the inlet varies according to the volumetric flow rate of primary air entering the inlet.

The total pressure and the static pressure are measurable quantities. The flow measurement device in a VAV terminal unit is designed to measure velocity pressure. Most flow sensors consist of a hollow piece

of tubing with orifices in it. The VariTrane air valve contains a flow ring as its flow measuring device. The flow ring is two round coils of tubing. Evenly spaced orifices in the upstream coil are the high-pressure taps that average the total pressure of air flowing through the air valve. The orifices in the downstream ring are low-pressure taps that average the air pressure in the wake of flow around the tube. By definition, the measurement of static pressure is to occur at a point perpendicular to the airflow. The low-pressure taps on the VariTrane flow ring measure a pressure that is parallel to the direction of flow but in the opposite direction of the flow. This **wake pressure** that the downstream ring measures is lower than the actual duct static pressure. The difference between the **wake pressure** and the static pressure can be accounted for so that the above relationship between flow and differential pressure remain valid. The difference also helps create a larger pressure differential than the velocity pressure. Since the pressures being measured in VAV terminal unit applications are small, this larger differential allows transducers and controllers to measure and control at lower flow settings than would otherwise be possible.

The average velocity of air traveling through the inlet is expressed in the equation:

$$FPM = 1096.5 \sqrt{\frac{VP}{DENS}}$$

Where:

- FPM = Velocity of air in feet per minute
- 1096.5 = A constant
- VP = The velocity pressure of the air expressed in inches of water
- DENS = The density of the air expressed in pounds per cubic foot

Often, the density is assumed to be a constant for dry air at standard conditions [68°F (20°C)] and sea level pressure of 14.7 psi (101.4 kPa). These conditions yield the following commonly used equation:

$$FPM = 4005 \sqrt{VP}$$

The amount of air traveling through the inlet is related to the area of the inlet and the velocity of the air:

AIRFLOW (cubic feet per minute, cfm) = AREA (square feet) x AVERAGE VELOCITY (feet per minute)

Accuracy

The multiple, evenly spaced orifices in the flow ring of the VariTrane terminal unit provide quality measurement accuracy even if ductwork turns or variations are present before the unit inlet. For the most accurate readings, a minimum of 1-1/2 diameters, and preferably three diameters, of straight-run ductwork is recommended prior to the inlet connection. The straight-run ductwork should be of the same diameter as the air valve inlet connection. If these recommendations are followed, and the air density effects mentioned below are addressed, the flow ring will measure primary airflow within ±5% of unit nominal airflow.

Figure 8. Air pressure measurement orientations

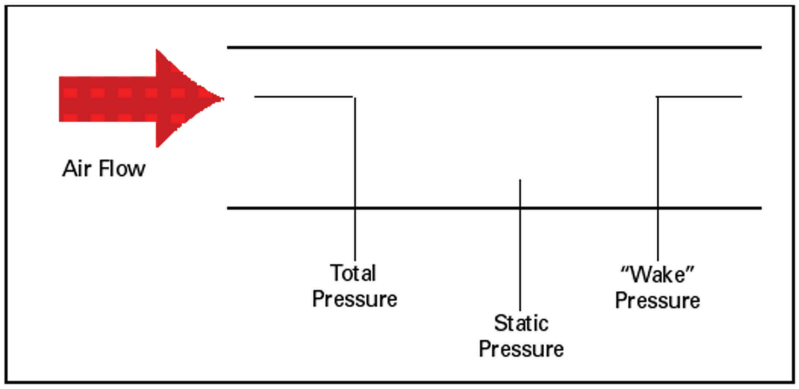

Air Density Effects

Changes in air density due to the conditions listed below sometimes create situations where the standard flow sensing calibration parameters must be modified. These factors must be accounted for to

achieve accuracy with the flow sensing ring. Designers, installers, and air balancers should be aware of these factors and know of the necessary adjustments to correct for them.

Elevation

At high elevations the air is less dense. Therefore, when measuring the same differential pressure at elevation versus sea level the actual flow will be greater at elevation than it would be at sea level. To calculate the density at an elevation other than standard conditions (most manufacturers choose sea level as the point for their standard conditions), you must set up a ratio between the density and differential pressure at standard conditions and the density and differential pressure at the new elevation.

$$\frac{\Delta P \text{ Standard Conditions}}{\text{DENS Standard Conditions}} = \frac{\Delta P \text{ New Conditions}}{\text{DENS New Conditions}}$$

Since the data from the manufacturer is published at standard conditions, this equation should be solved for the differential pressure at standard conditions and the other quantities substituted to determine the ratio for the differential pressure measured at the new conditions. For more application consideration information, reference *Applications Engineering Manual, Rooftop VAV Systems* (SYS-APM007*-EN).

Reheat Options

Hot Water Heating Coil

Figure 9. Hot water coil

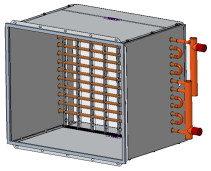

Figure 10. Trane hot water valve

Figure 11. Belimo hot water valve

Hot water heating coils are generally applied on VAV terminal units as reheat devices. When applying these coils it is important to confirm they are operating in the proper air flow and water flow range. See "Performance Data," p. 32. Either a two-way or a three-way valve controls the coils.

The most important factor when sizing valves is the coefficient of velocity or C_V. This coefficient of velocity, which is commonly called the flow coefficient, is an industry standard rating. Valves having the same flow coefficient rating, regardless of manufacturer, will have the same waterside performance characteristics.

The preferred method is to size the valve for 3 to 5 psi for pressure drop when full open. Generally the rule of thumb is to use 4 psi.

*C_V = GPM / 2 or GPM = 2 * C_V (since square root of 4 = 2)*

This formula is very easy to use and is as accurate as any other method. Size the valve for a C_V = 1/2 the GPM it must pass in modulating applications

The equation that governs valve sizing is:

$$C_V = \frac{GPM}{\sqrt{\Delta P}}$$

Where

- C_V = Flow coefficient
- GPM = The maximum water flow rate through the valve in gallons per minute
- ΔP = The maximum allowable differential pressure across the valve in psi

The flow and differential pressure are generally the known quantities. The equation is solved for the flow coefficient. The flow coefficient is then compared to the published C_V values for the control valves that are available. The control valve with the C_V that is the closest, but greater than, the calculated flow coefficient is the correct choice for the control valve. This choice will keep the valve pressure drop below the maximum allowable valve pressure drop. The valve pressure drop should then be checked against the coil pressure drop. If the coil pressure drop is appreciably larger than the valve pressure drop, a valve with a smaller C_V should be selected to produce a larger control valve pressure drop. If this new valve has a pressure drop that is much larger than the maximum allowable pressure drop for valves, the system designer should be consulted to make sure that the system hot water pumps can deliver the water at the new conditions.

Electric Reheat

Electric heating coils are applied on VAV terminal units as terminal reheat devices. Electric heat coil capacity is rated in kilowatts (kW). Coils are available with the total capacity divided into one, two, or three stages.

Electric heat coils are available in single-phase or three-phase models. This refers to the type of power source connected to the coil. Single-phase models have resistance elements internally connected in parallel. Three- phase models have resistance elements internally connected in a delta or a wye configuration.

The current draw for the electric coil will depend upon whether it is a single-phase or three-phase coil. The current draw is necessary for determining what size wire should be used to power the electric coil and how big the primary power fusing should be. The equations for current draw for these coils are:

$$1\phi\text{amps} = \frac{\text{kW} \times 1000}{\text{PrimaryVoltage}}$$

$$3\phi\text{amps} = \frac{\text{kW} \times 1000}{\text{PrimaryVoltage}\sqrt{3}}$$

VariTrane™ three-phase electric heat is available in balanced configurations. For example, a 9 kW three-phase coil, each stage would carry 1/3 or 3 kW of the load.

It is important to note that these coils have certain minimum airflow rates for each amount of kW heat the coil can supply to operate safely. These airflow values are based upon a maximum rise across the electric heater of 50°F (28°C).

The equation that relates the airflow across an electric coil to the temperature rise and the coil change in temperature is:

$$\text{CFM} = \frac{\text{kW} \times 3145}{\Delta T}$$

Where

- CFM = Minimum airflow rate across the coil
- kW = The heating capacity of the electric coil
- 3145 = a constant
- ΔT = The maximum rise in air temperature across the coil, usually 50°F (28°C)

Electric heat coils are available with magnetic or solid state relays. Magnetic contactors are less expensive than solid state relay contactors. However, solid state relay contactors can be cycled at a more rapid rate without failing.

Insulation

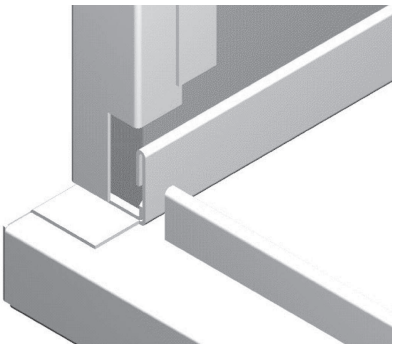

Insulation in a VariTrane™ terminal unit is used to avoid condensation on the outside of the unit, to reduce the heat transfer from the cold primary air entering the unit, and to reduce the unit noise. The VariTrane™ line offers four types of unit insulation. The type of facing classifies the types of insulation. To enhance IAQ effectiveness, edges of all insulation types have metal encapsulated edges.

Acoustics

Acoustical Best Practices

Lower velocities within a unit lead to improved acoustical performance. If the VAV terminal unit has a fan, lower RPM provides better acoustical performance.

Sizing of Units

Before blindly increasing the size of units, we must first understand what is setting the acoustics within the space. In general, over 95% of acoustics in VAV terminal units, which set the sound pressure levels and ultimately the NC within the space, is from radiated sound. This is readily known for fan-powered units, but less commonly known for single- and dual-duct units. Radiated sound emanates from the unit and enters the occupied space via means other than through the supply ductwork. The most typical path is through the plenum space, then through the ceiling, then into the occupied space. While discharge sound should never be ignored, radiated sound is the most dominant and usually the most critical sound source.

When increasing air valve sizes, BE CAREFUL. Oversizing an air valve can adversely impact the ability to modulate and properly control temperature in the space. In extremely oversized situations, the air valve will operate like a two-position controlled device, with air either being on, or off, and not much in between. The best way to avoid this is to understand that the minimum air velocity for most air valves is 300 FPM. This is a function of the flow sensing device and the ability of the pressure transducer and controller to properly read and report flow. This is not manufacturer specific, as physics applies to all. When sizing air valves, minimum velocity for proper pressure independent flow is 300 FPM.

Modulation capability and range is vital for proper operation of VAV systems. A good rule of thumb is to size design cooling airflow for a maximum of 2000 FPM. VAV systems only operate at full flow when there is a maximum call for cooling in the zone. The majority of the time, the air valve will be operating at partial flow.

When sizing fan-powered units, the fan airflow range can be determined by looking at the fan-curve. For parallel and series fan-powered units that operate at a constant fan speed, selections can be made all the way to the lowest flow ranges of the fan curve. A good balance of performance and cost is to select fans at 70-80% of maximum fan flow.

Insulation Types

Insulation is a factor to consider when dealing with the acoustics of terminal units. Most insulation types will provide similar acoustical results, but there are exceptions. Double-wall and closed-cell foam insulation will generally increase your sound levels because of the increased reflective surface area that the solid inner-wall and closed-cell construction provides. This increase in sound will have to be balanced with the IAQ and cleanability considerations of the dual-wall and closed-cell construction.

Acoustics – Series vs. Parallel Fan Units

Acoustical considerations may affect whether a series or parallel fan-powered terminal unit is selected.

The parallel unit has the advantage of fan energization and fan acoustical impact only when heating is needed. Parallel fans are smaller than series units because they are typically sized for 30 to 60% of total unit flow. The disadvantage of the parallel unit is intermittent sound. This impact can be minimized by using an ECM, which has slow fan ramp-up speed and can be configured for variable-speed fan control.

The primary acoustic benefit of a series fan-powered unit configured for constant-speed fan control is that the fan runs at the same speed continuously. Sometimes the unit can be selected at slightly higher sound levels due to the constant nature of the sound.

The primary acoustic disadvantage of the series unit is the need to size the unit fan for the total room airflow.

Note: *Operating parallel units with a continuously operating fan may be considered for some applications. This provides the quietest overall fan-powered system with the benefit of continuous fan operation. See your local Trane sales engineer for more details.*

Placement of Units

Unit placement in a building can have a significant impact on the acceptable sound levels. Locating units above non-critical spaces (hallways, closets, and storerooms) will help to contain radiated sound from entering the critical occupied zones.

Unit Attenuation

Factory installed suppressor attenuators are an option available to provide path sound attenuation. Manufacturer-provided attenuators on the discharge of a terminal unit are targeted at reducing discharge path noise and are typically a simple lined piece of ductwork. The downstream ductwork design should be slightly longer and include lining. Attenuators on the plenum inlet of fan-powered terminals are targeted at reducing radiated path noise since the plenum opening on a fan-powered terminal unit is typically the critical path sound source. Significant reduction in radiated path noise can result from a well-designed inlet attenuator. The attenuation from these attenuators is due to simple absorption from the attenuator lining and occupant line of sight sound path obstruction. Longer attenuators and attenuators that require the sound to turn multiple corners before reaching the occupied space provide superior results, particularly in the lower frequency bands.

Table 4. Octave band frequencies

Octave Band	Center Frequency	Band Edge Frequencies
1	63	44.6-88.5
2	125	88.5-177
3	250	177-354
4	500	354-707
5	1000	707-1414
6	2000	1414-2830
7	4000	2830-5650
8	8000	5650-11300

Certification and Testing

Terminal units should be submitted based on the same criteria. There are several ways to ensure this by certification and testing.

Raw unit sound data can be good measurement criteria for evaluation. In using this as a basis for comparison, the designer needs to make sure that the information is based on the AHRI Standard 880-2017 that gives the procedure for testing.

Specifying NC or RC sound levels is a possible comparison, but the designer needs to be sure the comparison is based on the same standards. Two options are: specify the attenuation effect on which you would like the units to be evaluated or specify that AHRI Standard 885-2008 transfer functions be used. AHRI Standard 885-2008 is the first AHRI Standard that specifies exact transfer functions to be used for evaluation. Previous versions of the standard gave guidelines, but manufacturers could choose their own set of factors.

Path Attenuation

Sound generated by a terminal unit can reach the occupied space along several paths. The terminal unit generated sound will lose energy – i.e. the energy is absorbed by path obstacles – as it travels to the occupied space. This acoustical energy dissipation as it travels to the occupied space is called path attenuation. The amount of energy lost along a particular path can be quantified and predicted using the procedure outlined in AHRI-885. Each path must be considered when determining acceptable sound power generated by a terminal unit.

Transfer function is often used to describe the entire path attenuation value for each octave band (i.e., the sum of all components of a particular path).

Examples of path attenuation include locating the terminal unit away from the occupied space, increasing the STC (sound transmission classification) of the ceiling tile used, internally lining ductwork, drywall lagging the ceiling tiles or enclosing the terminal unit in drywall. All of these choices have costs associated with them that must be weighed against the benefits. Some of these alternatives can be acoustically evaluated from application data provided in AHRI-885. Others may require professional analysis from an acoustical consultant.

Computer Modeling

Computer modeling of acoustical paths is available to help estimate sound levels and determine problem sources. The software used by Trane for computer modeling is called Trane Acoustics Program (TAP™).

This software can analyze different room configurations and materials to quickly determine the estimated total sound levels (radiated and discharged) in a space. Trane Select Assist™ can also be used to determine sound levels of terminal units. You can base selections on a maximum sound level and enter your own attenuation factors (defaults based on AHRI-885 are also available).

Best Practices

Common Mistakes

Some of the most common system or installation errors are discussed below.

Reducers at Unit Inlet

This problem is a very common issue that is seen in applications of VAV products. It is often mistaken by those in the field as an unacceptably large static pressure drop through the unit. It is also sometimes mistaken as a malfunctioning flow ring or pressure transducer.

This problem is sometimes unknowingly encountered because of the capability of the VAV unit to allow greater airflow for a specific size duct than other terminal units. For example, a project engineer specifies an 8-inch (203 mm) round take off from the main duct trunk to the VAV terminal unit. The person supplying the VAV terminal unit checks the required airflow and finds that a VAV unit with a 6-inch (152 mm) inlet will provide the specified terminal unit performance. The terminal unit supplier submits, receives approval, and orders the 6-inch (152 mm) inlet unit. While this is happening, the installing contractor has run the connecting duct from the main trunk to the terminal unit in the specified 8-inch (152 mm) round. The unit arrives at the job site, and the installer notices that the 8-inch (203 mm) duct and the 6–inch (152 mm) terminal unit inlet do not match. To get the unit installed, an 8- to 6-inch reducer is placed at the inlet to the terminal unit air valve.

The reducer will cause a phenomenon called flow separation at the unit inlet. Fluid dynamics analysis can present a detailed technical explanation of flow separation, but the characteristics important to this discussion are the production of pressure loss and turbulence. The reducer will have a significant static pressure drop associated with it since the air velocity is increased (i.e., static pressure is given up for increased velocity pressure). The pressure loss is sometimes mistaken as a loss due to the function of the terminal unit. The turbulence is at its greatest just downstream of the reducer. Unfortunately, this is the location of the flow ring at the air-valve inlet. The reducer will cause the flow ring to give an inaccurate and inconsistent reading because of the turbulent air.

The solutions to this situation are:

- Locate the reducer upstream of the terminal unit at least three duct diameters to eliminate flow separation and turbulence at the unit inlet and to improve the airflow measurement accuracy.
- Consider proper sizing of the terminal unit in the duct design and account for the pressure loss of the reducer in the central fan selection if a reducer is required. Be cautious of oversizing a VAV terminal. It is good practice to make sure that the inlet duct velocity at the minimum airflow setting is no lower than 500 feet per minute.

Improper Use of Flexible Ductwork

While flexible ductwork has many benefits, improper use can cause numerous problems in a VAV system. Flexible ductwork causes turbulent airflow and relatively large static pressure drops. Flexible ductwork at a primary damper inlet (i.e., the flow sensor location) may cause flow accuracy and repeatability problems due to turbulence. The use of flexible ductwork should be primarily limited to the downstream side of the terminal units in a VAV system. Use of flexible ductwork upstream of terminal units should be kept to an absolute minimum. All runs of flexible ductwork should be kept as short as possible. While most know these guidelines, the ease of installation which flexible ductwork provides is always an enticement to push the limits of what are acceptable practices.

Static Pressure Measurement Errors

Improper measurement techniques for static pressure can lead many to mistakenly believe that the terminal unit is causing a large pressure drop in the system. The chief error made here is taking a static pressure measurement in turbulent locations such as flexible ductwork or near transitions. This produces invalid static pressure readings. Another error commonly made is trying to read the static pressure at the same point as the flow sensing device. The inlets to VAV terminal units produce turbulence and will give poor readings. Flow sensors with their multiple-point averaging capability are best equipped to deal with this type of flow, while a single-point static probe is not. Another common error is the incorrect orientation of the static pressure probe. The static pressure is correctly measured when the probe is oriented perpendicular to the direction of airflow. The probe, or a part of it, should never be facing the direction of airflow, because the total pressure will influence the reading of the probe.

VAV System and Product References

VAV System	Product Reference
VAV Systems Air Conditioning Clinic	TRG-TRC014*-EN
Trane Intelligent VAV Systems	APP-PRC010*-EN
Chilled-water VAV Systems Applications Engineering Manual	SYS-APM008*-EN
Acoustics in Air Conditioning Applications Engineering Manual	ISS-APM001*-EN

Selection Procedure

This section describes elements and process required to properly select fan-powered VAV terminals and includes a specific examples. Selection procedure is iterative in nature, which makes computer selection desirable. Selection of fan-powered VAV terminals involves four elements:

- Air valve selection
- Heating coil selection
- Fan size and selection
- Acoustics

Note: *Use the same selection procedures and elements for selecting Low-Height Fan-Powered Units.*

Air Valve Selection

Provided in the Performance Data—Air Pressure Requirements section of the catalog is the unit air pressure drop at varying airflows. To select an air valve, determine the airflow required at design cooling. Next, select an air valve diameter that will allow proper airflow modulation, (a maximum velocity of 1600 – 2000 FPM is recommended). Keep in mind that **modulation below 300 FPM is not recommended.** Proper selection requires defining the minimum valve airflow (in either heating or cooling) and maintaining at least 300 FPM through the air valve. The minimum is typically set based on ventilation requirements. If zone ventilation does not come through the VAV unit, a minimum valve position can also be zero.

Heating Coil Selection

Supply Air Temperature

The first step required when selecting a heating coil is to determine the heating supply air temperature to the space, calculated by using the heat transfer equation. A recommended value is 90°F, although values between 85°F and 95°F are common. Discharge air temperatures that exceed 20 degrees above space temperature are not recommended for proper diffuser operation. Air temperature difference is defined as the heating supply air temperature to the space minus the winter room design temperature. The zone design heat loss rate is denoted by the letter Q. Supply air temperature to the space equals the leaving air temperature (LAT) for the terminal unit.

Coil Leaving Air Temperature

Once the terminal unit LAT is determined, the heating requirements for the coil can be calculated. The leaving air temperature for the coil of a parallel fan-powered terminal unit varies based on the type of unit installed heat being selected.

Electric coil LAT equals terminal unit LAT because the coil is located on the unit discharge. Hot water coils can be located on either the discharge or, for maximum system efficiency, the plenum inlet when located on the entering air side of the fan. Coil LAT is calculated by using a mixing equation. Given the unit heating airflow and LAT, minimum primary airflow at its supply air temperature, and the volume of heated plenum air, the leaving air temperature for the hot water coil can be determined (see the unit selection example that follows for more details).

Coil Entering Air Temperature

The entering air temperature (EAT) to the coil also varies based on the coil position on the unit for parallel units.

Parallel electric coils are mounted on the unit discharge. Hot water coils can be mounted on the discharge or on the plenum inlet. Plenum inlet mounting creates a more efficient VAV system. This is because the parallel fan is energized only when in heating mode, and thus, when in cooling mode, the water coil is not in the air stream.

The EAT for discharge mounted coils equals the temperature of blended primary air and plenum air. For plenum inlet mounted water coils, the EAT equals the plenum air temperature.

Capacity Requirement

Once both coil EAT and LAT are determined, the heat transfer (Q) for the coil must be calculated using the heat transfer equation. For electric heat units, the Q value must be converted from Btu to kW for heater selection. The required kW should be compared to availability charts in the performance data section for the unit selected. For hot water heat units, reference the capacity charts in the performance data section for the required heat transfer Q and airflow to pick the appropriate coil.

Fan Size and Selection

Fan Airflow

Fan airflow is determined by calculating the difference between the unit design heating airflow and minimum primary airflow.

Fan External Static Pressure

Fan external static pressure is the total resistance experienced by the fan, which may include downstream ductwork and diffusers, heating coils, and sound attenuators. As total airflow varies so will static pressure, making calculation of external static pressure dependent on unit type.

With series fan-powered terminal units, all airflow passes through the fan. External static pressure requirements are the sum of the individual component pressure retirements at the design airflow of the unit.

Fan Motor Type

The fan motor type that will be used for the unit will need to be known before fan selection can begin. The ECM motor offers more efficient operation than the standard single-speed PSC motor and will use different fan curves. Because series fans operate in both heating and cooling mode, payback is typically 2 to 3 years for the ECM option.

Selection

Once fan airflow and external static pressure are determined, reference the fan curves in the performance data section. Cross plot both airflow and external static pressure on each applicable graph. A selection between the minimum and maximum airflow ranges for the fan is required.

It is common to identify more than one fan that can meet the design requirements. Typically, selection begins with the smallest fan available to meet capacity. If this selection does not meet acoustical requirements, upsizing the fan and operating it at a slower speed can be done for quieter operation.

Acoustics

Air Valve Generated Noise

To determine the noise generated by the air valve, two pieces of information are required; design airflow and design air pressure drop. The design air pressure drop is determined by taking the difference between design inlet and static pressure (the valve's most over-pressurized condition) and external static pressure at design cooling flow. This represents a worst-case operating condition for the valve.

Fan Generated Noise

To determine fan noise levels, fan airflow, external static pressure and speed information is required.

Evaluation Elements

For series fan-powered units, the air valve and fan are evaluated together because they have simultaneous operation. Access the appropriate acoustics table(s) of the catalog and determine the sound power and NC prediction for both the discharge and radiated paths. It is important to understand that discharge air noise is generally not a concern with fan-powered terminals. Radiated noise from the unit casing typically dictates the noise level of the space. If the entire unit or any element of it is generating noise in excess of the noise criteria requirements, the size of the appropriate portion of the terminal should be increased. Because the selection procedure is iterative, care should be taken by the

designer to confirm that the change in selection does not affect other elements of the unit or system design.

Selection Example – Series With Hot Water Heat and ECM

Air Valve Selection

Required Information:
Design cooling airflow: 1000 cfm
Minimum ventilation airflow: 200 cfm
Maximum unit APD: 0.40 in. wg
A 10" air valve is selected.
Check—Is minimum airflow above 300 FPM?
Answer—Yes. Minimum cfm allowable = 165 cfm. (See General Data—Valve/Controller Guidelines pp FPS 8).
The Medium fan will be used in this instance. By interpolating, you can choose a 10" air valve with wide-open air pressure drop of 0.32 in. wg.

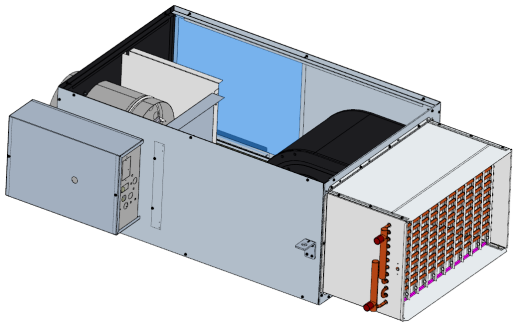

Heating Coil Selection

Required Information:

Zone design heat loss: 30114 Btu/hr
Design heating airflow: 1000 cfm
Winter room design temp.: 68ºF
Coil entering water temp.: 140ºF
Minimum primary airflow: 200 cfm
Plenum temperature: 70ºF
Primary air temperature: 55ºF
Coil flow rate: 2 gpm
Heat transfer equation (Btu/hr) Q = 1.085 × cfm × Temperature Difference

For the heating zone, the cfm is the design heating airflow and the temperature difference is the zone supply air temperature (SAT) minus the winter room design temperature.

30114 Btu/hr = 1.085 × 1000 cfm × (SAT - 68°F)
SAT = 95.76ºF

Because the hot water coil is on the unit discharge of a series fan-powered unit, the unit supply air temperature is equal to the coil LAT. Coil entering air temperature (EAT) is a mix of plenum air and the minimum primary airflow.

1000 cfm × Coil EAT = 200 cfm × 55ºF + (1000 cfm - 200 cfm) × 70ºF

Coil EAT = 67ºF

For the heating coil, the temperature difference is the calculated coil LAT minus the coil EAT (plenum air temperature).

Coil Q = 1.085 × 1000 cfm × (95.76°F - 67.00°F) = 31,185 Btu/hr = 31.18 MBh

On a series unit the hot water coil is located on the discharge, so the total heating airflow, 1000 cfm, passes through the coil.

Coil Performance Table

Selection:

Performance:
Size Medium fan, 2-row coil at 2 gpm = 31.18 MBh
2-row coil at 2 gpm= 0.31 ft. WPD

Fan Selection

Required Information:

Fan airflow: 1000 cfm
Downstream static pressure at design airflow: 0.25 in. wg

A size Meduim fan can operate at up to 2000 cfm (1-row coil) or 1950 (2-row coil) and 0.25-inch downstream static pressure 3-row and 4-row coils available. Inlet and coil selections should be verified with Trane Select Assist™ electronic selections.

Computer Selection

Trane has developed a computer program to schedule, size, and select VAV terminal units. The software is called Trane Select Assist.

The Trane Select Assist program will take the input specifications and output the properly sized VAV terminal unit along with the specific performance for that size unit.

The program has several required fields, denoted by red shading in the Trane Select Assist screen, and many other optional fields to meet the criteria you have. Required values include maximum and minimum airflows, control type, and model. If selecting models with reheat, you will be required to enter information to make that selection also. The user is given the option to look at all the information for one selection on one screen or as a schedule with the other VAV units on the job.

User can select single-duct, dual-duct, and fan-powered VAV boxes with the program, as well as most other Trane® products, allowing selection of all Trane equipment with one software program.

The program will also calculate sound power data for the selected terminal unit. The user can enter a maximum individual sound level for each octave band or a maximum NC value. The program will calculate acoustical data subject to default or user supplied sound attenuation data.

Schedule View

The program has many time-saving features such as:

- Copy/paste from spreadsheets like Microsoft® Excel
- Easily arranged fields to match your schedule
- Time-saving templates to store default settings

User can also export Schedule View to Excel to modify and put into a CAD drawing as a schedule.

Specific details regarding program, its operation, and how to obtain a copy of it are available from a local Trane sales office.

Model Number Descriptions

Fan Powered VAV Units - Series

Digit 1, 2, 3, 4 — Unit Model

VSCG = Series Fan Powered Cooling Only
VSEG = Series Fan Powered With Electric Heat
VSWG = Series Fan Powered With Hot Water Heat

Digit 5, 6 — Primary Inlet

04 = 4" inlet (225 cfm)
05 = 5" inlet (350 cfm)
06 = 6" inlet (500 cfm)
08 = 8" inlet (900 cfm)
10 = 10" inlet (1400 cfm)
12 = 12" inlet (2000 cfm
14 = 14" inlet (3000 cfm)
16 = 16" inlet (4000 cfm)

Digit 7, 8 — Secondary Inlet

00 = Not Used For Product Coding

Digit 9 — Fan Size

1 = Small
2 = Medium
3 = Large

Digit 10, 11 — Design Sequence

A0 = Design Sequence

Digit 12, 13, 14, 15 — Unit Controls

ENCL = Shaft Only In Enclosure
DD00 = Trane Actuators Only
DD71 = UC210 DDC-Basic (Cooling only)
DD72 = UC210 DDC-Basic (Water heat-N.C. 2-position)
DD73 = UC210 DDC-Basic (Water heat-Modulating)
DD74 = UC210 DDC-Basic (Electric heat-Staged)
DD75 = UC210 DDC-Basic (Electric heat-PWM)
DD77 = UC210 DDC-Basic (Water heat-N.O. 2-position)
DD83 = UC210 DDC-Basic Plus Local (Electric heat-PWM) Remote (Staged)
DD84 = UC210 DDC-Basic Plus Local (Water heat Modulating) Remote (Water-N.C. 2-position)
DD85 = UC210 DDC-Basic Plus Local (Water heat Modulating) Remote (Water-N.O. 2-position)
DD86 = UC210 DDC-Basic Plus Local (Water heat N.O. 2-position) Remote (Water-Modulating)

Digit 12, 13, 14, 15 — Unit Controls (continued)

DD87 = UC210 DDC-Basic Plus Local (Water heat N.C. 2-position) Remote (Water-Modulating)
DD88 = UC210 DDC-Basic Plus Local (Water heat N.O. 2-position) Remote (Water-N.O. 2-position)
DD89 = UC210 DDC-Basic Plus Local (Water heat N.C. 2-position) Remote (Water-N.C. 2-position)
DD90 = UC210 DDC-Basic Plus Local (Water heat N.O. 2-position) Remote (Water-N.C. 2-position)
DD91 = UC210 DDC-Basic Plus Local (Water heat N.C. 2-position) Remote (Water-N.O. 2-position)
DD92 = UC210 DDC-Basic Plus Local (Electric heat-staged) Remote (Staged)
DD95 = UC210 DDC-Control with Modulating SCR
DD96 = UC210 DDC-Space Temp Control with Local SCR and Remote Staged Electric heat
SE41 = Symbio™ 500 DDC-Basic (Cooling only) or VAV Dual-Duct
SE42 = Symbio 500 DDC-Basic (Water heat-N.C. 2-position)
SE43 = Symbio 500 DDC-Basic (Water heat-Modulating)
SE44 = Symbio 500 DDC-Basic (Electric heat-staged)
SE45 = Symbio 500 DDC-Basic (Electric heat-PWM)
SE46 = Symbio 500 DDC-Ventilation Flow (no reheat)
SE47 = Symbio 500 DDC-Basic (Water heat-N.O. 2-position)
SE53 = Symbio 500 DDC-Basic Plus Local (Electric heat-pwm) Remote (Staged)
SE54 = Symbio 500 DDC-Basic Plus Local (Water heat Modulating) Remote (Water-N.C. 2-position)
SE55 = Symbio 500 DDC-Basic plus Local (Water heat Modulating) Remote (Water-N.O. 2-position)
SE56 = Symbio 500 DDC-Basic plus Local (Water heat N.O. 2-position) Remote (Water-Modulating)
SE57 = Symbio 500 DDC-Basic plus Local (Water heat N.C. 2-position) Remote (Water-Modulating)
SE58 = Symbio 500 DDC-Basic plus Local (Water heat N.O. 2-position) Remote (Water-N.O. 2-position)
SE59 = Symbio 500 DDC-Basic plus Local (Water heat N.C. 2-position) Remote (Water-N.C. 2-position)
SE60 = Symbio 500 DDC-Basic plus Local (Water heat N.O. 2-position) Remote (Water-N.C. 2-position)
SE61 = Symbio 500 DDC-Basic plus Local (Water heat N.C. 2-position) Remote (Water-N.O. 2-position)
SE62 = Symbio 500 DDC-Basic plus Local (Electric heat-staged) Remote (Staged)
SE63 = Symbio 500 DDC -Ventilation Flow (water heat-no 2-position)
SE65 = Symbio 500 DDC-Control with Modulating SCR
SE66 = Symbio 500 DDC-Space Temp Control with Local SCR and Remote Staged Electric heat

Digit 12, 13, 14, 15 — Unit Controls (continued)

SE71 = Symbio 210e DDC-Basic (Cooling only)
SE72 = Symbio 210e DDC-Basic (Water heat-nc 2-position)
SE73 = Symbio 210e DDC-Basic (Water heat-Modulating)
SE74 = Symbio 210e DDC-Basic (Electric heat-staged)
SE75 = Symbio 210e DDC-Basic (Electric heat-PWM)
SE77 = Symbio 210e DDC-Basic (Water heat-N.O. 2-position)
SE83 = Symbio 210e DDC-Basic plus Local (Electric heat-PWM) Remote (Staged)
SE84 = Symbio 210e DDC-Basic plus Local (Water heat Modulating) Remote (Water-N.C. 2-position)
SE85 = Symbio 210e DDC-Basic plus Local (Water heat Modulating) Remote (Water-N.O. 2-position)
SE86 = Symbio 210e DDC-Basic plus Local (Water heat N.O. 2-position) Remote (Water-Modulating)
SE87 = Symbio 210e DDC-Basic plus Local (Water heat N.C. 2-position) Remote (Water-Modulating)
SE88 = Symbio 210e DDC-Basic plus Local (Water heat N.O. 2-position) Remote (Water-N.O. 2-position)
SE89 = Symbio 210e DDC-Basic plus Local (Water heat N.C. 2-position) Remote (Water-N.C. 2-position)
SE90 = Symbio 210e DDC-Basic plus Local (Water heat N.O. 2-position) Remote (Water-N.C. 2-position)
SE91 = Symbio 210e DDC-Basic plus Local (Water heat N.C. 2-position) Remote (Water-N.O. 2-position)
SE92 = Symbio 210e DDC-Basic plus Local (Electric heat-staged) Remote (Staged)
SE95 = Symbio 210e DDC-Control with Modulating SCR
SE96 = Symbio 210e DDC-Space Temp Control with Local SCR and Remote Staged Electric heat
SY71 = Symbio 210 DDC-Basic (Cooling only)
SY72 = Symbio 210 DDC-Basic (Water heat- N.C.-2 position)
SY73 = Symbio 210 DDC - Basic (Water heat-Modulating)
SY74 = Symbio 210 DDC - Basic (Electric heatstaged)
SY75 = Symbio 210 DDC - Basic (Electric heat-PWM)
SY77 = Symbio 210 DDC -Basic (Water heat -N.O.-2 position)
SY83 = Symbio™ 210 DDC- Basic plus- Local (Electric heat- PWM) Remote (Staged)

Digit 12, 13, 14, 15 — Unit Controls (continued)

SY84 = Symbio™ 210 DDC- Basic plus Local (Water heat- Modulating) Remote (Water- N.C. 2-position)
SY85 = Symbio 210 DDC- Basic plus Local (Water heat- Modulating) Remote (Water-N.O. 2-position)
SY86 = Symbio 210 DDC- Basic plus- Local (Water heat- N.O. 2-position) Remote (Water-Modulating)
SY87 = Symbio 210 DDC- Basic plus- Local (Water heat- N.C. 2-position) Remote (Water-Modulating)
SY88 = Symbio 210 DDC- Basic plus- Local (Water heat- N.O. 2-position) Remote (Water- N.O. 2-position)
SY89 = Symbio 210 DDC-Basic plus- Local (Water heat- N.C. 2-position) Remote (Water- N.C. 2-position)
SY90 = Symbio 210 DDC- Basic plus- Local (Water heat- N.O. 2-position) Remote (Water- N.C. 2-position)
SY91 = Symbio 210 DDC- Basic plus- Local (Water heat- N.C. 2-position) Remote (Water- N.O. 2-position)
SY92 = Symbio 210 DDC- Basic plus- Local (Electric heat- Staged) Remote (Staged)
SY95 = Symbio™ 210 DDC - Control with Modulating SCR
SY96 = Symbio 210 DDC - Space Temp Control with Local SCR and Remote Staged Electric heat
DDSS = DDC Special
FM00 = Other Actuator and Control
FM01 = Trane Supplied Actuator, Other Control

Digit 16 — Insulation

B = 1” Matte-faced
D = 1” Foil-faced
F = 1” Double Wall
G = 3/8” Closed-cell
S = Special

Digit 17 — Motor Type

D = PSC Motor
E = Constant Volume (ECM)
F = Variable Volume (ECV)
S = Special Motor

Digit 18 — Motor Voltage

1 = 115/60/1 Volt Fan Motor
2 = 277/60/1 Volt Fan Motor
4 = 208/60/1 Volt Fan Motor
5 = 230/50/1 Volt Fan Motor
S = Special Motor Voltage

Digit 19 — Outlet Connection

1 = Flanged Connection VSCG and VSEG
2 = Slip and Drive Connection VSWG

Digit 20 — Attenuators

0 = Standard Unit (No Attenuator)
A = With Integral Return Attenuator
S = Special Attenuator

Digit 21 — Hot Water Coil

0 = No Water Coil
1 = One Row Water Coil
2 = Two Row Water Coil
3 = Three Row Water Coil
4 = Four Row Water Coil
A = One Row Premium Water Coil
B = Two Row Premium Water Coil
C = Three Row Premium Water Coil
D = Four Row Premium Water Coil
S = Special Hot Water Coil

Digit 22 — Hot Water Coil Connection

1 = Same Side Connection - Coil and Control
2 = Coil Connection Opposite Of Control

Digit 23 — Unit Filter

0 = 1" Throw Away
8 = 1" Merv8
3 = 2" Merv13
S = Special Filter

Digit 24 — Toggle Switch

0 = With Toggle Switch VSCG and VSWG
W = Unit Disconnect with Toggle Switch VSEG
S = Special Toggle Switch

Digit 25 — POWER FUSE

0 = No Fusing
W = With Power Fuse
S = Special Power Fuse

Digit 26 — Electric Heater Voltage

0 = NO HEATER VOLTAGE
A = 208/60/1
B = 208/60/3
C = 240/60/1
D = 277/60/1
E = 480/60/1
F = 480/60/3
J = 380/50/3
K = 120/60/1
S = Special Electric Heater Voltage

Digit 27, 28, 29 — Electric Heater Kilowatt

000 = N0 kW
010 = 1.0 kW
015 = 1.5 kW
020 = 2.0 kW
025 = 2.5 kW
030 = 3.0 kW
035 = 3.5 kW
040 = 4.0 kW
045 = 4.5 kW
050 = 5.0 kW
055 = 5.5 kW
060 = 6.0 kW
065 = 6.5 kW
070 = 7.0 kW
075 = 7.5 kW
080 = 8.0 kW
090 = 9.0 kW
100 = 10.0 kW
110 = 11.0 kW
120 = 12.0 kW
130 = 13.0 kW
140 = 14.0 kW
150 = 15.0 kW
160 = 16.0 kW
170 = 17.0 kW
180 = 18.0 kW
200 = 20.0 kW
220 = 22.0 kW
SSS = Special kW

Digit 30 — Electric Heater Stage

0 = NO STAGES OF HEAT
1 = 1 STAGE
2 = 2 STAGES EQUAL
S = Special Electric Heater Stage

Digit 31 — Electric Heater Control

0 = No Contactors
1 = 24 Volt Magnetic Contactor
5 = SCR Heat With Trane Controls
6 = SCR Heat Fmtd/Encl/Dd00
7 = Solid State Relay
S = Special Electric Heater Control

Digit 32 — Electric Heater Air Flow Switch

0 = No Air Flow Switch
W = With Air Flow Switch
S = Special Air Flow Switch

Digit 33 — Special Options

0 = No Special Options
A = Dual Power Connection Special

Digit 34 — Actuator

0 = Standard Actuator - Floating Point
A = Belimo Actuator - Floating Point
B = Spring Return Actuator - Normally Open
C = Spring Return Actuator - Normally Closed
G = Trane Analog Actuator - Trane Conrols Only
S = Special Actuator

Digit 35 — Wireless Sensor Option

0 = Wired Sensor
3 = Air-Fi® Wireless Communication Interface (Fm)

Digit 36 — Factory Attached Field Mounted

0 = None
1 = Factory Terminated/Field Installed DTS
2 = Factory Terminated/Field Installed HW Valve Harness
4 = Factory Terminated and Installed - DTS in Plenum
5 = Factory Terminated and Installed - DTS in Plenum Factory Terminated/Field Installed HW Valve Harness

Digit 37 — Bottom Access

0 = Standard Top And Bottom Access

Digit 38 — Hot Water Piping Package

0 = None (No Piping Package)
C = 2-Way Standard Valve Only, Floating Point Actuator
D = 3-Way Standard Valve Only, Floating Point Actuator
E = 2-Way Standard Valve Piping Package, Floating Point Actuator
F = 3-Way Standard Valve Piping Package, Floating Point Actuator
G = 2-Way Belimo Valve Only, Floating Point Actuator
H = 3-Way Belimo Valve Only, Floating Point Actuator
J = 2-Way Belimo Valve Piping Package, Floating Point Actuator
K = 3-Way Belimo Valve Piping Package, Floating Point Actuator
L = 2-Way Belimo Valve Only, Analog Actuator
M = 3-Way Belimo Valve Only, Analog Actuator
N = 2-Way Belimo Valve Piping Package, Analog Actuator
P = 3-Way Belimo Valve Piping Package, Analog Actuator

Digit 39 — Water Valve

0 = None (No Water Valve)
1 = HW Valve, 0.7 Cv
2 = HW Valve, 2.7 Cv
5 = Analog HW Valve, field provided (UC210 only)
6 = HW Valve, 1.7 Cv
7 = HW Valve, 5.0 Cv
A = HW Valve, 0.3 Cv
B = HW Valve, 0.46 Cv
C = HW Valve, 0.8 Cv
D = HW Valve, 1.2 Cv
E = HW Valve, 1.9 Cv
F = HW Valve, 3.0 Cv
G = HW Valve, 4.7 Cv

Digit 40 — Hot Water Flow Rate

0 = None (No Flow Rate)
A = 0.5 gpm (0.03 l/s)
U = 0.75 gpm (0.05 l/s)
B = 1 gpm (0.06 l/s)
V = 1.25 gpm (0.08 l/s)
C = 1.5 gpm (0.09 l/s)
W = 1.75 gpm (0.11 l/s)
D = 2 gpm (0.13 l/s)
E = 2.5 gpm (0.16 l/s)
F = 3 gpm (0.19 l/s)
G = 3.5 gpm (0.22 l/s)
H = 4 gpm (0.25 l/s)
J = 4.5 gpm (0.28 l/s)
K = 5 gpm (0.32 l/s)
L = 5.5 gpm (.035 l/s)
M = 6 gpm (0.38 l/s)
N = 6.5 gpm (0.41 l/s)
P = 7 gpm (0.44 l/s)
Q = 7.5 gpm (0.47 l/s)

Fan Powered Low Height VAV Units - Series

Digit 1, 2— Unit Type

LS = VariTrane™ Fan-Powered Low Height Series

Digit 3— Reheat

C = Cooling Only
E = Electric Heat
W = Hot Water Heat

Digit 4 — Development Sequence

F = Low Height Units

Digit 5, 6 — Primary Air Valve

05 = 5" inlet (350 cfm)
06 = 6" inlet (500 cfm)
08 = 8" inlet (900 cfm)
10 = 10" inlet (1400 cfm)
RT = 8" x 14" inlet (1800 cfm)

Digit 7, 8— Secondary Air Valve Used

00 = N/A

Digit 9 — Fan

A = DS02 Fan (1300 nom cfm)
C = DS03 Fan (1950 nom cfm)

Digit 10, 11— Design Sequence

** = Factory Assigned

Digit 12, 13, 14, 15 — Controls

DD71 = UC210 DDC- Basic (No water or electric heat)
DD72 = UC210 DDC- Basic (Water heat- N.C. 2-position)
DD73 = UC210 DDC- Basic (Water heat- Modulating)
DD74 = UC210 DDC- Basic (Electric heat- Staged)
DD75 = UC210 DDC- Basic (Electric heat- PWM)
DD77 = UC210 DDC- Basic (Water heat- N.O. 2-position)
DD83 = UC210 DDC- Basic plus- Local (Electric heat- PWM) Remote (Staged EH)
DD84 = UC210 DDC- Basic plus- Local (Water heat- Modulating) Remote (Water- N.C. 2-position)
DD85 = UC210 DDC- Basic plus- Local (Water heat- Modulating) Remote (Water- N.O. 2-position)
DD86 = UC210 DDC- Basic plus- Local (Water heat- N.O. 2-position) Remote (Water- Modulating)
DD87 = UC210 DDC- Basic plus- Local (Water heat- N.C. 2-position) Remote (Water- Modulating)
DD88 = UC210 DDC- Basic plus- Local (Water heat- N.O. 2-position) Remote (Water- N.O. 2-position)
DD89 = UC210 DDC-Basic plus- Local (Water heat- N.C. 2-position) Remote (Water- N.C. 2-position)
DD90 = UC210 DDC- Basic plus- Local (Water heat- N.O. 2-position) Remote (Water- N.C. 2-position)
DD91 = UC210 DDC- Basic plus- Local (Water heat- N.C. 2-position) Remote (Water- N.O. 2-position)
DD92 = UC210 DDC- Basic plus- Local (Electric heat- Staged) Remote (Staged)
DD95 = UC210 Basic (Electric Heat Modulating SCR)
DD96 = UC210 Basic plus- Local (Electric heat- Modulating SCR) Remote (Staged EH)
DD00 = Trane Actuator Only
ENCL = Shaft Only in Enclosure
FM00 = Other Actuator and Control
FM01 = Trane Supplied Actuator, Other Ctrl
SE41 = Symbio™ 500 DDC-Basic (Cooling only) or VAV Dual-Duct
SE42 = Symbio™ 500 DDC-Basic (Water heat-N. C. 2-position)
SE43 = Symbio™ 500 DDC-Basic (Water heat- Modulating)
SE44 = Symbio™ 500 DDC-Basic (Electric heat- Staged)

Digit 12, 13, 14, 15 — Controls (continued)

SE45 = Symbio™ 500 DDC-Basic (Electric heat- PWM)
SE47 = Symbio™ 500 DDC-Basic (Water heat-N. O. 2-position)
SE53 = Symbio™ 500 DDC-Basic plus Local (Electric heat-pwm) Remote (Staged)
SE54 = Symbio™ 500 DDC-Basic plus Local (Water heat Modulating) Remote (Water-N.C. 2–position)
SE55 = Symbio™ 500 DDC-Basic plus Local (Water heat Modulating) Remote (Water-N.O. 2–position)
SE56 = Symbio™ 500 DDC-Basic plus Local (Water heat N.O. 2-position) Remote (Water- Modulating)
SE57 = Symbio™ 500 DDC-Basic plus Local (Water heat N.C. 2-position) Remote (Water- Modulating)
SE58 = Symbio™ 500 DDC-Basic plus Local (Water heat N.O. 2-position) Remote (Water-N.O. 2-position)
SE59 = Symbio™ 500 DDC-Basic plus Local (Water heat N.C. 2-position) Remote (Water-N.C. 2-position)
SE60 = Symbio™ 500 DDC-Basic plus Local (Water heat N.O. 2-position) Remote (Water-N.C. 2-position)
SE61 = Symbio™ 500 DDC-Basic plus Local (Water heat N.C. 2-position) Remote (Water-N.O. 2-position)
SE62 = Symbio™ 500 DDC-Basic plus Local (Electric heat-staged) Remote (Staged)
SE65 = Symbio™ 500 DDC-Control with Modulating SCR
SE66 = Symbio™ 500 DDC-Space Temp Control with Local SCR and Remote Stage Electric heat
SE71 = Symbio™ 210e DDC - Basic (Cooling only)
SE72 = Symbio™ 210e DDC - Basic (Water heat- N.C.- 2 position)
SE73 = Symbio™ 210e DDC - Basic (Water heat- Modulating)
SE74 = Symbio™ 210e DDC - Basic (Electric heat- staged)
SE75 = Symbio™ 210e DDC - Basic (Electric heat- PWM)
SE77 = Symbio™ 210e DDC -Basic (Water heat -N.O.- 2 position)
SE83 = Symbio™ 210e DDC- Basic plus- Local (Electric heat- PWM) Remote (Staged)
SE84 = Symbio™ 210e DDC- Basic plus- Local (Water heat- Modulating) Remote (Water- N.C. 2-position)
SE85 = Symbio™ 210e DDC- Basic plus- Local (Water heat- Modulating) Remote (Water- N.O. 2-position)
SE86 = Symbio™ 210e DDC- Basic plus- Local (Water heat- N.O. 2-position) Remote (Water- Modulating)
SE87 = Symbio™ 210e DDC- Basic plus- Local (Water heat- N.C. 2-position) Remote (Water- Modulating)
SE88 = Symbio™ 210e DDC- Basic plus- Local (Water heat- N.O. 2-position) Remote (Water- N.O. 2-position)

Digit 12, 13, 14, 15 — Controls (continued)

SE89 = Symbio™ 210e DDC-Basic plus- Local (Water heat- N.C. 2-position) Remote (Water- N.C. 2-position)
SE90 = Symbio™ 210e DDC- Basic plus- Local (Water heat- N.O. 2-position) Remote (Water- N.C. 2-position)
SE91 = Symbio™ 210e DDC- Basic plus- Local (Water heat- N.C. 2-position) Remote (Water- N.O. 2-position)
SE92 = Symbio™ 210e DDC- Basic plus- Local (Electric heat- Staged) Remote (Staged)
SE95 = Symbio™ 210e DDC - Control with Modulating SCR
SE96 = Symbio™ 210e DDC - Space Temp Control with Local SCR and Remote Staged Electric heat
SY71 = Symbio™ 210 DDC - Basic (Cooling only)
SY72 = Symbio™ 210 DDC - Basic (Water heat- N. C.- 2 position)
SY73 = Symbio™ 210 DDC - Basic (Water heat- Modulating)
SY74 = Symbio™ 210 DDC - Basic (Electric heat- staged)
SY75 = Symbio™ 210 DDC - Basic (Electric heat- PWM)
SY77 = Symbio™ 210 DDC -Basic (Water heat -N. O.- 2 position)
SY83 = Symbio™ 210 DDC- Basic plus- Local (Electric heat- PWM) Remote (Staged)
SY84 = Symbio™ 210 DDC- Basic plus- Local (Water heat- Modulating) Remote (Water- N.C. 2-position)
SY85 = Symbio™ 210 DDC- Basic plus- Local (Water heat- Modulating) Remote (Water- N.O. 2-position)
SY86 = Symbio™ 210 DDC- Basic plus- Local (Water heat- N.O. 2-position) Remote (Water- Modulating)
SY87 = Symbio™ 210 DDC- Basic plus- Local (Water heat- N.C. 2-position) Remote (Water- Modulating)
SY88 = Symbio™ 210 DDC- Basic plus- Local (Water heat- N.O. 2-position) Remote (Water- N.O. 2-position)
SY89 = Symbio™ 210 DDC-Basic plus- Local (Water heat- N.C. 2-position) Remote (Water- N.C. 2-position)
SY90 = Symbio™ 210 DDC- Basic plus- Local (Water heat- N.O. 2-position) Remote (Water- N.C. 2-position)
SY91 = Symbio™ 210 DDC- Basic plus- Local (Water heat- N.C. 2-position) Remote (Water- N.O. 2-position)
SY92 = Symbio™ 210 DDC- Basic plus- Local (Electric heat- Staged) Remote (Staged)
SY95 = Symbio™ 210 DDC - Control with Modulating SCR
SY96 = Symbio™ 210 DDC - Space Temp Control with Local SCR and Remote Staged Electric heat

Digit 16 — Insulation

A = 1/2" Matte-faced
B = 1" Matte-faced
D = 1" Foil-faced
F = 1" Double Wall
G = 3/8" Closed-cell

Digit 17— Motor Type

E = High-efficiency Electronically Commutated Motor (ECM)
F = Variable Speed High-efficiency Electronically Commutated Motor (ECV)

Digit 18— Motor Voltage

1 = 115/60/1
2 = 277/60/1
4 = 208/60/1

Digit 19— Outlet Connection

1 = Flanged
2 = Slip–and-Drive Connection

Digit 20— Attenuator

0 = None
T = Thinline Suppressor

Digit 21— Water Coil

0 = None
3 = 1 Row, Discharge Installed LH
4 = 1 Row, Discharge Installed RH
5 = 2 Row, Discharge Installed LH
6 = 2 Row, Discharge Installed RH
C = 1 Row Premium, Hot Coil on Discharge LH
D = 2 Row Premium, Hot Coil on Discharge LH
E = 1 Row Premium, Hot Coil on Discharge RH
F = 2 Row Premium, Hot Coil on Discharge RH

Digit 22— Electrical Connections

F = Flippable Left and Right Hand

Digit 23— Transformer

0 = Not Applicable

Digit 24 — Disconnect Switch

0 = None
W = With

Note: *Electric reheat w/door interlocking power disconnect, cooling only and water reheat w/toggle disconnect.*

Digit 25 — Power Fuse

0 = None
W = With

Digit 26 — Electric Heat Voltage

0 = None
A = 208/60/1
B = 208/60/3
C = 240/60/1
D = 277/60/1
E = 480/60/1
F = 480/60/3
G = 347/60/1
H = 575/60/3
J = 120/60/1

Digit 27, 28, 29— Electric Heat kW

000 = None
010 = 1.0 kW
015 = 1.5 kW
200 = 20.0 kW

Notes:

- *0.5 to 8.0 kW in 1/2 kW increments*
- *8.0 to 18.0 kW in 1 kW increments*
- *18.0 to 20.0 kW in 2 kW increments*

Digit 30 — Electric Heat Stages

0 = None
1 = 1 Stage
2 = 2 Stages Equal

Digit 31 — Electric Heat Contactors

0 = None
1 = 24V Magnetic
5 = 0-10 Vdc SCR Heat; Symbio™ 500
6 = 0-10 Vdc SCR Heat; FMTD/ENCL/DD00

Notes: *SCR cannot be selected with the following:*

- *kW>10,208V, 3Ph, Low Height*
- *kW>22,480V, 3Ph, Low Height*
- *Voltage = 575V*

Digit 32— Air Switch

0 = Not Applicable
W = With

Digit 33— Not Used

0 = Not Applicable

Digit 34 — Actuator

0 = Standard
A = Belimo™ Actuator
B = Spring return, Normally Open
C = Spring return, Normally Closed
G = Trane Analog Actuator (UC210 only)

Digit 35 — Wireless Sensors

0 = None
3 = Trane Air-Fi® Wireless Communications Interface

Note: *All sensors selected in accessories.*

Digit 36 — Pre-wired Factory Solutions

0 = None
1 = Factory-mounted DTS
2 = HW Valve Harness
3 = Both DTS/HW Valve Harness

Digit 37 — Not Used

0 = Not Applicable

Digit 38 —Piping Package

0 = None
A = 2–Way Automatic Balancing
B = 3–Way Automatic Balancing
C = 2-Way Standard Valve Only, Floating Point Actuator
D = 3-Way Standard Valve Only, Floating Point Actuator
E = 2-Way Standard Valve Piping Package, Floating Point Actuator
F = 3-Way Standard Valve Piping Package, Floating Point Actuator
G = 2-Way Belimo Valve Only, Floating Point Actuator
H = 3-Way Belimo Valve Only, Floating Point Actuator
J = 2-Way Belimo Valve Piping Package, Floating Point Actuator
K = 3-Way Belimo Valve Piping Package, Floating Point Actuator
L = 2-Way Belimo Valve Only, Analog Actuator
M = 3-Way Belimo Valve Only, Analog Actuator
N = 2-Way Belimo Valve Piping Package, Analog Actuator
P = 3-Way Belimo Valve Piping Package, Analog Actuator

Digit 39 — Water Valve

0 = None
1 = Trane HW Valve 0.7 Cv
2 = Trane HW Valve 2.7 Cv
5 = Analog HW Valve, Field Provided (UC210 only)
6 = Trane HW Valve 1.7 Cv
7 = Trane HW Valve 5.0 Cv
A = Belimo HW Valve, 0.3 Cv
B = Belimo HW Valve, 0.46 Cv
C = Belimo HW Valve, 0.8 Cv
D = Belimo HW Valve, 1.2 Cv
E = Belimo HW Valve, 1.9 Cv
F = Belimo HW Valve, 3.0 Cv
G = Belimo HW Valve, 4.7 Cv

Digit 40 — Flow Rate

0 = None
A = 0.5 gpm, 0.03 l/s
B = 1.0 gpm, 0.06 l/s
C = 1.5 gpm, 0.09 l/s
D = 2.0 gpm, 0.13 l/s
E = 2.5 gpm, 0.16 l/s
F = 3.0 gpm, 019 l/s
G = 3.5 gpm, 0.22 l/s
H = 4.0 gpm, 0.25 l/s
J = 4.5 gpm, 0.28 l/s
K = 5.0 gpm, 0.31 l/s
L = 5.5 gpm, 0.35 l/s
M = 6.0 gpm, 0.38 l/s
N = 6.5 gpm, 0.41 l/s
P = 7.0 gpm, 0.44 l/s
Q = 7.5 gpm, 0.47 l/s

Performance Data

Series Fan-Powered Terminal Units

Table 5. Primary airflow control factory settings – I-P

Air Valve Size (in.)	Maximum Valve Cfm	Maximum Controller Cfm	Minimum Controller Cfm	Constant Volume Cfm
4	225	25-225	0, 25-225	25-225
5	350	40-350	0, 40-350	40-350
6	500	60-500	0, 60-500	60-500
8	900	105-900	0, 105-900	105-900
10	1400	165-1400	0, 165-1400	165-1400
12	2000	240-2000	0, 240-2000	240-2000
14	3000	320-3000	0, 320-3000	320-3000
16	4000	420-4000	0, 420-4000	420-4000

Note: Maximum airflow must be greater than or equal to minimum airflow.

Table 6. Primary airflow control factory settings – SI

Air Valve Size (in.)	Maximum Valve L/s	Maximum Controller L/s	Minimum Controller L/s	Constant Volume L/s
4	106	12-106	0, 12-106	12-106
5	165	19-165	0, 19-165	19-165
6	236	28-236	0, 28-236	28-236
8	425	50-425	0, 50-425	50-425
10	661	77-661	0, 77-661	77-661
12	944	111-944	0, 111-944	111-944
14	1416	151-1416	0, 151-1416	151-1416
16	1888	198-1888	0, 198-1888	198-1888

Note: Maximum airflow must be greater than or equal to minimum airflow.

Table 7. Coil air pressure drop – in. wg (I-P)

Unit Size	Airflow CFM	1-Row (in. wg)	2-Row (in. wg)	3-Row (in. wg)	4-Row (in. wg)
Small	200	0.01	0.02	0.03	0.04
	400	0.03	0.06	0.09	0.12
	600	0.06	0.11	0.17	0.23
	800	0.09	0.18	0.27	0.36
	1000	0.13	0.26	0.39	0.52
Medium	400	0.02	0.04	0.05	0.07
	750	0.05	0.09	0.14	0.19
	1100	0.09	0.17	0.26	0.36
	1450	0.13	0.27	0.42	0.56
	1800	0.19	0.39	0.59	0.80
Large	500	0.02	0.03	0.05	0.06
	900	0.04	0.08	0.12	0.16
	1300	0.07	0.14	0.21	0.28
	1700	0.10	0.21	0.32	0.43
	2100	0.15	0.30	0.46	0.61

Note: HW Coil Only pressure drops do not include unit pressure drop.

Table 8. Coil air pressure drop – Pa (SI)

Unit Size	Airflow L/s	1-Row (Pa)	2-Row (Pa)	3-Row (Pa)	4-Row (Pa)
Small	200	2.74	5.22	7.96	10.95
	400	7.22	14.43	22.14	29.86
	600	13.68	27.62	42.05	56.48
	800	21.89	43.79	66.93	90.07
	1000	31.60	63.44	96.53	130.12
Medium	400	4.23	8.96	13.44	18.16
	750	11.44	23.14	35.33	47.52
	1100	21.15	43.04	65.68	88.32
	1450	33.34	67.92	103.50	139.08
	1800	48.02	97.28	147.79	198.79
Large	500	3.73	7.71	11.69	15.85
	900	9.21	18.91	28.86	38.56
	1300	16.67	34.09	51.75	69.42
	1700	25.88	52.50	79.86	107.73
	2100	36.57	74.64	113.20	152.27

Note: HW Coil Only pressure drops do not include unit pressure drop.

Figure 12. Performance data fan curves, series VSxG small standard — PSC

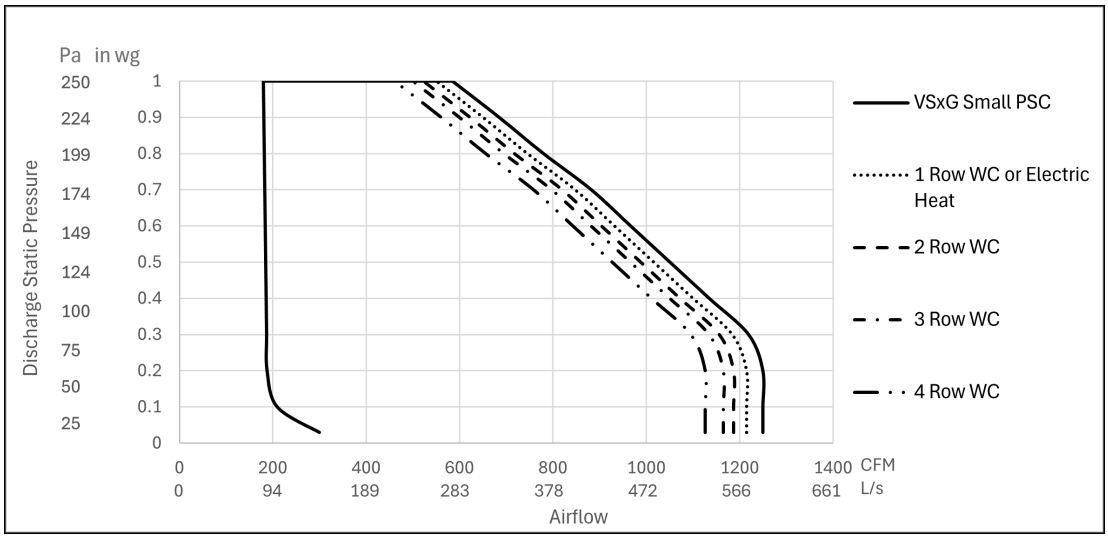

Figure 13. Performance data fan curves, series VSxG medium standard — PSC

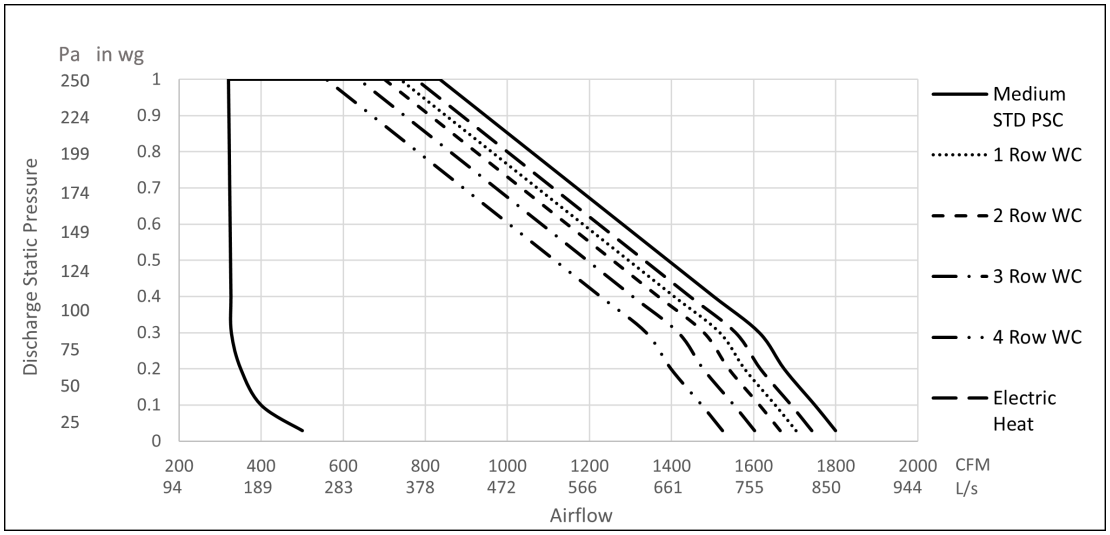

Figure 14. Performance data fan curves, series VSxG large standard — PSC

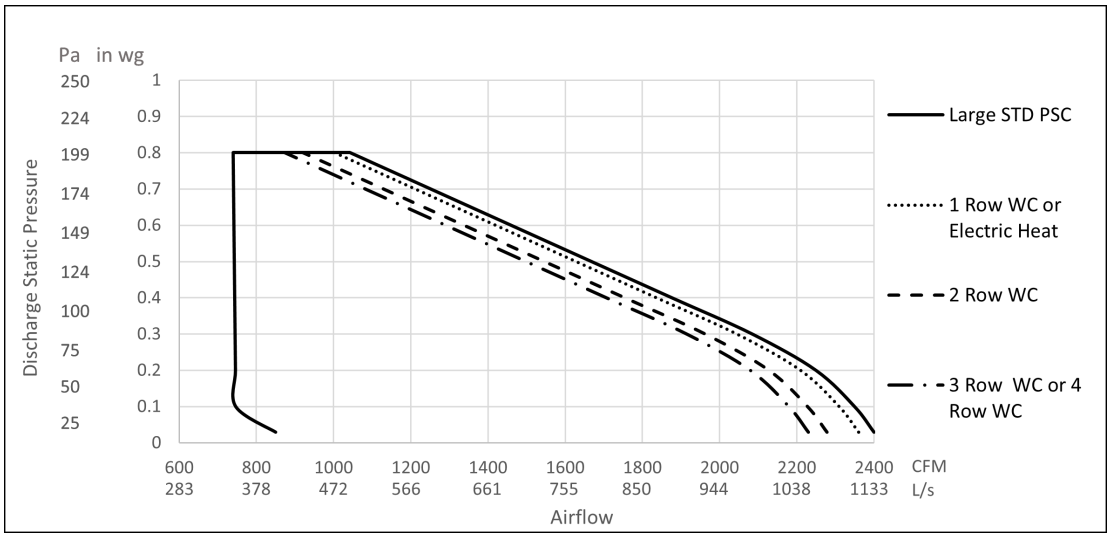

Figure 15. Performance data fan curves, VSxG small standard — ECM

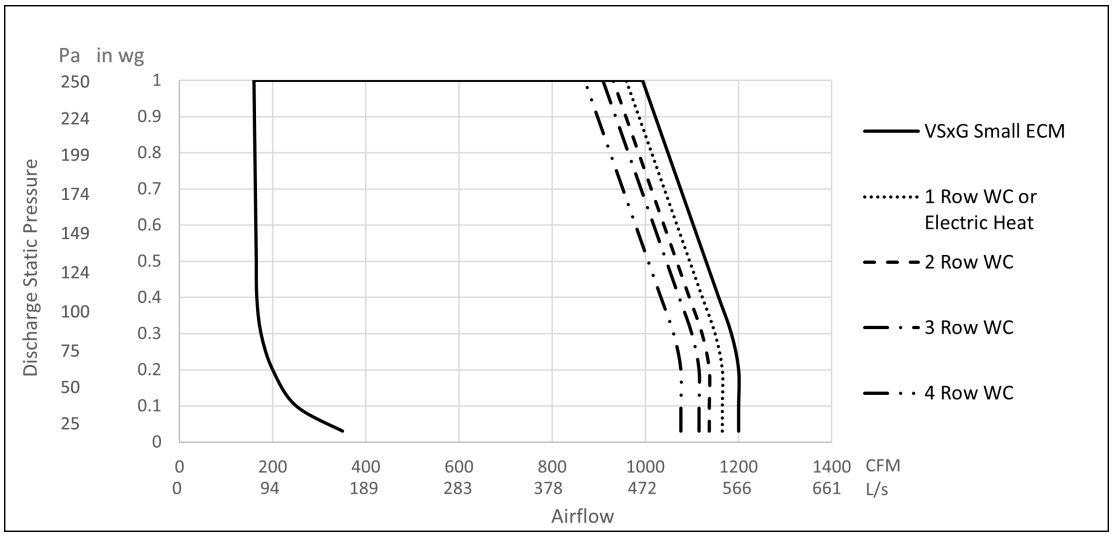

Figure 16. Performance data fan curves, VSxG medium standard — ECM

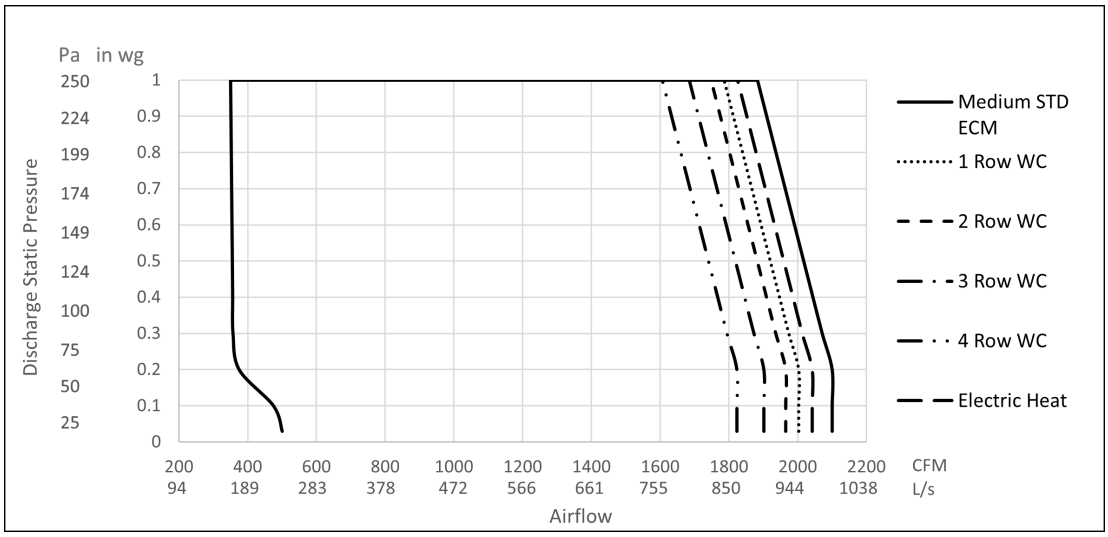

Figure 17. Performance data fan curves, VSxG large standard — ECM

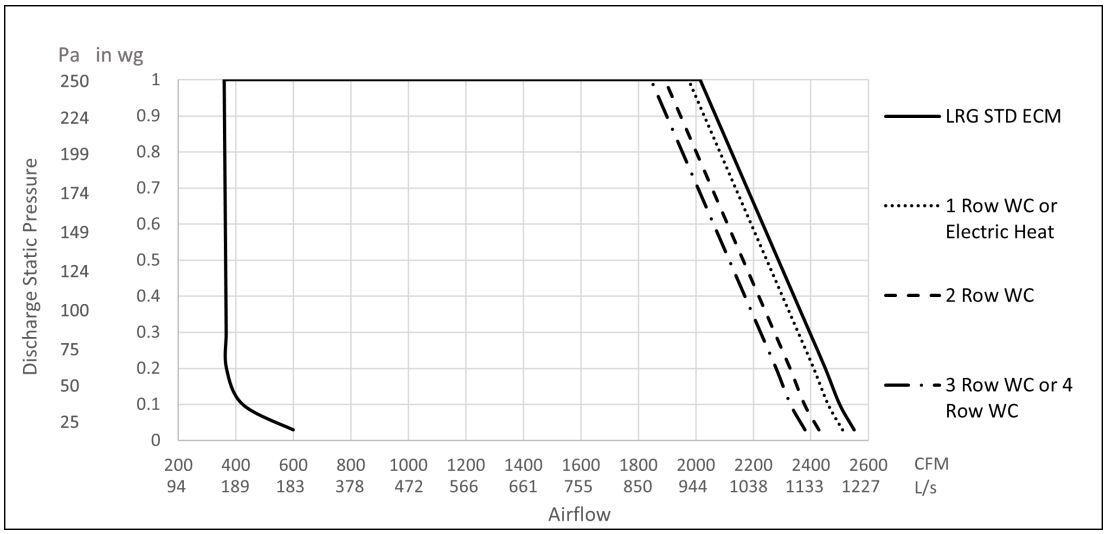

Table 9. Heating capacity (MBh) – VSxG small size (I-P)

Rows	GPM	Water Pressure Drop (ft)	Airflow (CFM)									
			180	264	368	474	576	680	784	888	992	1096
1-Row Capacity MBh	0.50	0.21	-	11.66	13.77	15.07	16.25	16.81	17.23	17.57	17.85	18.10
	1.00	0.74	-	14.26	17.58	19.97	22.27	23.62	24.69	25.59	26.37	27.05
	2.00	2.57	-	15.97	20.38	23.70	26.81	28.80	30.47	31.93	33.30	34.55
	3.00	5.38	-	16.64	21.75	25.27	28.83	31.18	33.19	34.95	36.55	38.02
	4.00	9.10	-	17.00	22.37	26.14	29.95	32.52	34.73	36.69	38.46	40.10
	5.00	13.72	-	17.22	22.76	26.69	30.67	33.38	35.73	37.81	39.71	41.47
2-Row Capacity MBh	0.50	-	-	-	-	-	-	-	-	-	-	-
	1.00	0.07	13.81	23.62	24.06	24.06	25.38	26.39	27.13	27.72	28.22	28.64
	2.00	0.26	15.80	32.34	32.96	32.96	36.05	38.56	40.54	42.21	43.65	44.92
	3.00	0.56	16.41	35.73	36.43	36.43	40.49	43.90	46.68	49.08	51.20	53.10
	4.00	0.96	16.72	37.52	38.25	38.25	42.89	46.85	50.15	53.03	55.60	57.93
	5.00	1.46	16.91	38.66	39.41	39.41	44.44	48.77	52.43	55.66	58.56	61.21
3-Row Capacity MBh	0.50	-	-	-	-	-	-	-	-	-	-	-
	1.00	0.10	16.73	23.08	27.06	28.94	30.69	31.96	33.44	34.15	34.74	-
	2.00	0.34	18.77	27.64	34.84	39.41	43.68	47.06	50.63	52.86	54.76	-
	3.00	0.72	19.35	28.98	37.38	43.22	48.84	53.51	58.43	61.78	64.71	-
	4.00	1.22	19.62	29.61	38.60	45.11	51.49	56.94	62.69	66.76	70.38	-
	5.00	1.84	19.78	29.98	39.33	46.26	53.14	59.10	65.41	69.99	74.12	-
4-Row Capacity MBh	0.50	-	-	-	-	-	-	-	-	-	-	-
	1.00	0.12	18.62	24.34	29.25	32.34	35.35	36.72	37.73	38.52	39.16	-
	2.00	0.42	20.47	28.49	36.98	43.66	50.30	54.35	57.62	60.31	62.59	-
	3.00	0.87	20.94	29.55	39.23	47.43	55.89	61.60	66.45	70.63	74.27	-
	4.00	1.47	21.16	30.01	40.23	49.18	58.60	65.26	71.07	76.19	80.76	-
	5.00	2.21	21.28	30.28	40.80	50.19	60.20	67.47	73.92	79.70	84.91	-

Table 10. Heating capacity (MBh) – VSxG medium size (I-P)

Rows	GPM	Water Pressure Drop (ft)	Airflow (CFM)									
			390	561	732	903	1074	1245	1416	1587	1758	1929
1-Row Capacity MBh	0.5	0.26	15.18	17.67	18.84	19.67	20.15	20.52	21.19	21.40	21.58	21.73
	1	0.88	19.35	24.18	27.12	29.30	30.76	31.92	33.50	34.27	34.94	35.56
	2	3.05	22.43	29.00	33.31	36.78	39.53	41.80	44.60	46.26	47.76	49.15
	3	6.35	23.64	31.13	36.24	40.41	43.58	46.28	49.68	51.88	53.90	55.79
	4	10.71	24.32	32.31	37.88	42.49	46.05	49.10	52.84	55.24	57.48	59.68
	5	16.1	24.73	33.06	38.94	43.83	47.65	50.95	54.96	57.59	60.05	62.39
2-Row Capacity MBh	0.5	-	-	-	-	-	-	-	-	-	-	-
	1	0.08	23.85	27.90	29.95	31.44	32.35	33.03	34.18	34.58	34.92	35.23
	2	0.3	30.93	39.28	44.53	48.71	51.39	53.64	56.55	58.05	59.37	60.55
	3	0.63	33.32	43.66	50.75	56.45	60.68	64.16	68.42	70.91	73.14	75.17
	4	1.07	34.51	45.92	54.08	60.82	65.97	70.30	75.50	78.17	81.63	84.30
	5	1.62	35.24	47.34	56.22	63.68	68.94	74.45	80.33	84.11	87.55	90.74

Table 10. Heating capacity (MBh) – VSxG medium size (I-P) (continued)

Rows	GPM	Water Pressure Drop (ft)	Airflow (CFM)									
			390	561	732	903	1074	1245	1416	1587	1758	1929
3-Row Capacity MBh	0.5	-	-	-	-	-	-	-	-	-	-	-
	1	0.11	28.77	33.64	36.05	37.76	38.76	39.51	40.79	41.20	41.54	-
	2	0.39	36.85	47.39	54.19	59.36	62.93	65.72	69.26	71.05	72.57	-
	3	0.82	39.31	52.37	61.73	69.34	75.01	79.64	85.14	88.36	91.18	-
	4	1.39	40.45	54.77	65.58	74.69	82.75	87.69	94.59	98.94	102.81	-
	5	2.09	41.12	56.21	67.95	78.06	86.11	92.99	100.93	106.14	110.84	-
4-Row Capacity MBh	0.5	-	-	-	-	-	-	-	-	-	-	-
	1	0.14	32.13	37.57	40.18	41.98	43.00	43.74	45.08	45.44	45.75	-
	2	0.49	40.51	52.78	60.80	66.86	70.97	74.12	78.05	79.96	81.56	-
	3	1.02	42.76	57.82	69.03	78.21	85.07	90.62	97.06	100.81	104.06	-
	4	1.71	43.71	60.08	72.97	84.03	92.72	100.00	108.30	113.56	118.20	-
	5	2.56	44.25	61.36	75.28	87.54	97.48	106.01	115.66	122.10	127.86	-

Table 11. Heating capacity (MBh) – VSxG large size (I-P)

Rows	GPM	Water Pressure Drop (ft)	Airflow (CFM)								
			370	588	806	1024	1242	1460	1678	1896	2114
1-Row Capacity MBh	0.5	0.09	13.14	16.14	17.28	18.10	18.45	18.70	18.88	19.04	19.32
	1	0.33	17.74	24.59	28.20	30.78	32.21	33.26	34.08	34.75	35.64
	2	1.20	20.70	30.25	36.66	41.58	44.89	47.47	49.57	51.35	53.40
	3	2.59	21.82	33.25	40.62	46.55	50.60	54.02	56.97	59.52	62.37
	4	4.48	22.43	34.72	42.91	49.61	54.30	58.16	61.47	64.46	67.87
	5	6.85	22.82	35.67	44.40	51.63	56.78	61.05	64.73	68.00	71.65
2-Row Capacity MBh	0.5	0.14	18.66	25.73	22.70	23.46	23.70	23.87	23.99	24.08	24.36
	1	0.50	26.59	35.47	39.56	42.38	43.76	44.71	45.42	45.98	46.84
	2	1.77	31.16	45.97	55.17	62.22	66.64	69.97	72.61	74.78	77.33
	3	3.73	32.70	49.85	61.61	71.21	77.77	82.98	87.27	90.91	94.95
	4	6.36	33.47	51.85	65.09	76.25	84.24	90.77	96.27	101.04	106.23
	5	9.64	33.94	53.07	67.24	79.44	88.41	95.89	102.28	107.88	113.96
3-Row Capacity MBh	0.5	0.20	21.54	24.33	25.06	25.68	25.80	25.87	25.92	25.95	26.21
	1	0.68	31.36	41.11	45.21	47.88	49.00	49.71	50.20	50.57	51.31
	2	2.34	36.66	54.11	65.22	73.58	78.63	82.29	85.06	87.25	89.85
	3	4.87	38.25	58.48	73.11	85.18	93.45	99.91	105.10	109.39	114.08
	4	8.25	39.01	60.56	7.79	91.37	101.79	110.29	117.26	123.38	129.81
	5	12.43	39.45	61.76	79.42	95.12	107.00	116.94	125.41	132.76	140.55
4-Row Capacity MBh	0.5	0.25	23.32	25.73	26.20	26.69	26.70	26.70	26.69	26.68	-
	1	0.85	34.46	44.65	48.50	50.87	51.67	52.13	52.41	52.60	-
	2	2.90	39.92	59.25	71.78	81.00	86.34	90.01	92.67	94.67	-
	3	6.02	41.34	63.57	80.39	94.38	103.96	111.30	117.05	121.68	-
	4	10.14	41.97	65.46	84.38	101.11	113.50	123.55	131.83	138.77	-
	5	15.22	42.32	66.47	86.59	104.98	119.12	131.16	141.31	150.05	-

Table 12. Heating capacity (kW) – VSxG small size (SI)

Rows	L/s	Water Pressure Drop (kPa)	Airflow (L/s)									
			85	125	174	224	272	321	370	419	468	517
1-Row Capacity kW	0.24	0.63	-	3.42	4.03	4.42	4.76	4.93	5.05	5.15	5.23	5.30
	0.47	2.21	-	4.18	5.15	5.85	6.53	6.92	7.24	7.50	7.73	7.93
	0.94	7.68	-	4.68	5.97	6.94	7.86	8.44	8.93	9.36	9.76	10.13
	1.42	16.08	-	4.88	6.37	7.41	8.45	9.14	9.73	10.24	10.71	11.14
	1.89	27.19	-	4.98	6.56	7.66	8.78	9.53	10.18	10.75	11.27	11.75
	2.36	41.00	-	5.05	6.67	7.82	8.99	9.78	10.47	11.08	11.64	12.15
2-Row Capacity kW	0.24	-	-	-	-	-	-	-	-	-	-	-
	0.47	0.21	4.05	6.92	7.05	7.05	7.44	7.73	7.95	8.12	8.27	8.39
	0.94	0.78	4.63	9.48	9.66	9.66	10.57	11.30	11.88	12.37	12.79	13.17
	1.42	1.67	4.81	10.47	10.68	10.68	11.87	12.87	13.68	14.39	15.01	15.56
	1.89	2.87	4.90	11.00	11.21	11.21	12.57	13.73	14.70	15.54	16.29	16.98
	2.36	4.36	4.95	11.33	11.55	11.55	13.02	14.29	15.37	16.31	17.16	17.94
3-Row Capacity kW	0.24	-	-	-	-	-	-	-	-	-	-	-
	0.47	0.30	4.90	6.76	7.93	8.48	8.99	9.37	9.80	10.01	10.18	-
	0.94	1.02	5.50	8.10	10.21	11.55	12.80	13.79	14.84	15.49	16.05	-
	1.42	2.15	5.67	8.49	10.95	12.67	14.31	15.68	17.12	18.10	18.96	-
	1.89	3.65	5.75	8.68	11.31	13.22	15.09	16.69	18.37	19.56	20.63	-
	2.36	5.50	5.80	8.79	11.53	13.56	15.57	17.32	19.17	20.51	21.72	-
4-Row Capacity kW	0.24	-	-	-	-	-	-	-	-	-	-	-
	0.47	0.36	5.46	7.13	8.57	9.48	10.36	10.76	11.06	11.29	11.48	-
	0.94	1.26	6.00	8.35	10.84	12.80	14.74	15.93	16.89	17.68	18.34	-
	1.42	2.60	6.14	8.66	11.50	13.90	16.38	18.05	19.47	20.70	21.77	-
	1.89	4.39	6.20	8.80	11.79	14.41	17.17	19.12	20.83	22.33	23.67	-
	2.36	6.60	6.24	8.87	11.96	14.71	17.64	19.77	21.66	23.36	24.89	-

Table 13. Heating capacity (kW) – VSxG medium size (SI)

Rows	L/s	Water Pressure Drop (kPa)	Airflow (L/s)									
			184	265	345	426	507	588	668	749	830	910
1-Row Capacity kW	0.24	0.78	4.45	5.18	5.52	5.77	5.91	6.01	6.21	6.27	6.32	6.37
	0.47	2.63	5.67	7.09	7.95	8.59	9.02	9.35	9.82	10.04	10.24	10.42
	0.94	9.11	6.57	8.50	9.76	10.78	11.58	12.25	13.07	13.56	14.00	14.40
	1.42	18.98	6.93	9.12	10.62	11.84	12.77	13.56	14.56	15.20	15.80	16.35
	1.89	32.00	7.13	9.47	11.10	12.45	13.49	14.39	15.48	16.19	16.85	17.49
	2.36	48.11	7.25	9.69	11.41	12.85	13.97	14.93	16.11	16.88	17.60	18.28
2-Row Capacity kW	0.24	-	-	-	-	-	-	-	-	-	-	-
	0.47	0.24	6.99	8.18	8.78	9.21	9.48	21.82	10.02	10.13	10.23	10.32
	0.94	0.90	9.06	11.51	13.05	14.28	15.06	20.60	16.57	17.01	17.40	17.74
	1.42	1.88	9.76	12.80	14.87	16.54	17.78	18.80	20.05	20.78	21.44	22.03
	1.89	3.20	10.11	13.46	15.85	17.82	19.34	15.72	22.13	22.91	23.92	24.71
	2.36	4.84	10.33	13.87	16.48	18.66	20.20	9.68	23.54	24.65	25.66	26.59

Table 13. Heating capacity (kW) – VSxG medium size (SI) (continued)

Rows	L/s	Water Pressure Drop (kPa)	Airflow (L/s)									
			184	265	345	426	507	588	668	749	830	910
3-Row Capacity kW	0.24	-	-	-	-	-	-	-	-	-	-	-
	0.47	0.33	8.43	9.86	10.57	11.07	11.36	11.58	11.96	12.07	12.17	10.32
	0.94	1.17	10.80	13.89	15.88	17.40	18.44	19.26	20.30	20.82	21.27	17.74
	1.42	2.45	11.52	15.35	18.09	20.32	21.98	23.34	24.95	25.89	26.72	22.03
	1.89	4.15	11.85	16.05	19.22	21.89	24.25	25.70	27.72	28.99	30.13	24.71
	2.36	6.25	12.05	16.47	19.91	22.88	25.24	27.25	29.58	31.11	32.48	26.59
4-Row Capacity kW	0.24	-	-	-	-	-	-	-	-	-	-	-
	0.47	0.42	9.42	11.01	11.78	12.30	12.60	12.82	13.21	13.32	13.41	-
	0.94	1.46	11.87	15.47	17.82	19.59	20.80	21.72	22.87	23.43	23.90	-
	1.42	3.05	12.53	16.95	20.23	22.92	24.93	26.56	28.44	29.55	30.50	-
	1.89	5.11	12.81	17.61	21.39	24.63	27.17	29.31	31.74	33.28	34.64	-
	2.36	7.65	12.97	17.98	22.06	25.66	28.57	31.07	33.90	35.78	37.47	-

Table 14. Heating capacity (kW) – VSxG large size (SI)

Rows	L/s	Water Pressure Drop (kPa)	Airflow (L/s)								
			175	278	380	483	586	689	792	895	998
1-Row Capacity kW	0.24	0.27	3.85	4.73	5.06	5.30	5.41	5.48	5.53	5.58	5.66
	0.47	0.99	5.20	7.21	8.27	9.02	9.44	9.75	9.99	10.18	10.44
	0.94	3.59	6.07	8.87	10.74	12.19	13.16	13.91	14.53	15.05	15.65
	1.42	7.74	6.40	9.74	11.90	13.64	14.83	15.83	16.70	17.44	18.28
	1.89	13.39	6.57	10.18	12.57	14.54	15.91	17.05	18.01	18.89	19.89
	2.36	20.47	6.69	10.45	13.01	15.13	16.64	17.89	18.97	19.93	21.00
2-Row Capacity kW	0.24	0.42	5.47	7.54	6.65	6.88	6.95	7.00	7.03	7.06	7.14
	0.47	1.49	7.79	10.40	11.60	12.42	12.82	13.10	13.31	13.47	13.73
	0.94	5.29	9.13	13.47	16.17	18.23	19.53	20.51	21.28	21.92	22.66
	1.42	11.15	9.58	14.61	18.06	20.87	22.79	24.32	25.58	26.64	27.83
	1.89	19.01	9.81	15.20	19.08	22.35	24.69	26.60	28.22	29.61	31.13
	2.36	28.81	9.95	15.55	19.71	23.28	25.91	28.10	29.98	31.62	33.40
3-Row Capacity kW	0.24	0.60	6.31	7.13	7.34	7.53	7.56	7.58	7.60	7.61	7.68
	0.47	2.03	9.19	12.05	13.25	14.03	14.36	14.57	14.71	14.82	15.04
	0.94	6.99	10.74	15.86	19.12	21.56	23.04	24.12	24.93	25.57	26.33
	1.42	14.55	11.21	17.14	21.43	24.96	27.39	29.28	30.80	32.06	33.43
	1.89	24.65	11.43	17.75	2.28	26.78	29.83	32.32	34.36	36.16	38.04
	2.36	37.14	11.56	18.10	23.27	27.88	31.36	34.27	36.75	38.91	41.19
4-Row Capacity kW	0.24	0.75	6.83	7.54	7.68	7.82	7.83	7.83	7.82	7.82	-
	0.47	2.54	10.10	13.09	14.21	14.91	15.14	15.28	15.36	15.42	-
	0.94	8.67	11.70	17.37	21.04	23.74	25.30	26.38	27.16	27.74	-
	1.42	17.99	12.12	18.63	23.56	27.66	30.47	32.62	34.30	35.66	-
	1.89	30.30	12.30	19.18	24.73	29.63	33.26	36.21	38.64	40.67	-
	2.36	45.48	12.40	19.48	25.38	30.77	34.91	38.44	41.41	43.98	-

Low Height Series Fan-Powered Terminal Units

Table 15. Primary airflow control factory settings – I-P

Air Valve Size (in.)	Maximum Valve (cfm)	Maximum Controller (cfm)	Minimum Controller (cfm)	Constant Volume (cfm)
4	225	25-225	0, 25-225	25-225
5	350	40-350	0, 40-350	40-350
6	500	60-500	0, 60-500	60-500
8	900	105-900	0, 105-900	105-900
10	1400	165-1400	0, 165-1400	165-1400
8x14	2200	200-2200	0, 220-2200	220-2200

Table 16. Primary airflow control factory settings – SI

Air Valve Size (in.)	Maximum Valve (cfm)	Maximum Controller (cfm)	Minimum Controller (cfm)	Constant Volume (cfm)
4	106	12-106	0, 12-106	12-106
5	165	19-165	0, 19-165	19-165
6	236	28-236	0, 28-236	28-236
8	425	50-425	0, 50-425	50-425
10	661	77-661	0, 77-661	77-661
8x14	1038	104-1038	0, 104-1038	104-1038

Note: Maximum airflow must be greater than or equal to minimum airflow.

Table 17. Coil air pressure drop

in.wg (I-P)			
Fan Size	Airflow (cfm)	1-Row HW (in. wg)	2-Row HW (in. wg)
DS02	100	0.01	0.01
	250	0.01	0.04
	500	0.04	0.11
	750	0.10	0.19
	1000	0.18	0.30
	1300	0.32	0.44
DS03	900	0.13	0.26
	1100	0.18	0.34
	1400	0.25	0.49
	1700	0.33	0.65
	1950	0.40	0.80

Pa (SI)			
Fan Size	Airflow L/s	1-Row HW (Pa)	2-Row HW (Pa)
DS02	47	2.5	2.5
	118	2.5	10
	236	10	27
	354	25	47
	472	45	75
	614	80	110
DS03	425	32	65
	519	45	85
	661	62	122
	802	82	162
	920	100	199

Figure 18. Performance data fan curves, LSxF DS02 — ECM

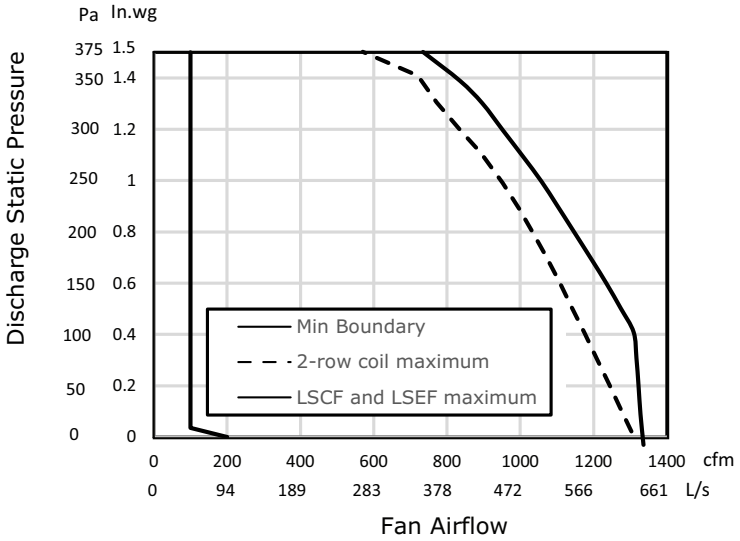

Figure 19. Performance data fan curves, LSxF DS03 — ECM

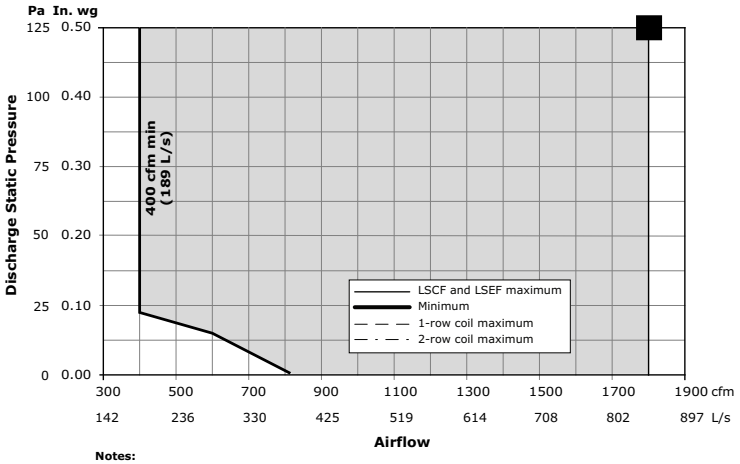

Notes:
- ECMs (electronically commutated motors) are ideal for systems seeking maximum motor efficiency.

Table 18. Heating capacity (MBh) — fan size DS02 (I-P)

Rows	Gpm	Water Pressure Drop (ft)	Airflow (Cfm)												
			100	200	300	400	500	600	700	800	900	1000	1100	1200	1300
1	1.0	0.15	6.87	9.06	10.47	11.53	12.40	13.14	13.77	14.32	14.80	15.07	15.44	15.78	16.09
	2.0	0.58	7.70	10.70	12.78	14.46	15.90	17.15	18.27	19.28	20.20	20.48	21.23	21.93	22.57
	3.0	1.27	7.92	11.16	13.45	15.34	16.97	18.42	19.73	20.92	22.01	23.02	23.83	24.70	25.53
	4.0	2.24	8.08	11.48	13.94	15.98	17.76	19.36	20.82	22.16	23.39	24.54	25.41	26.41	27.36
	5.0	3.48	8.17	11.69	14.25	16.39	18.28	19.99	21.54	22.98	24.32	25.57	26.47	27.57	28.61
	6.0	4.98	8.24	11.83	14.47	16.69	18.65	20.43	22.06	23.58	24.99	26.31	27.24	28.41	29.51
2	1.0	0.76	9.04	14.59	18.26	20.87	22.83	24.35	25.53	26.58	27.42	28.14	28.81	29.34	29.81
	2.0	2.60	9.45	15.95	20.70	24.34	27.24	29.61	31.59	33.28	34.74	36.02	37.48	38.49	39.40
	3.0	5.39	9.59	16.43	21.60	25.68	29.01	31.78	34.14	36.17	37.95	39.53	41.45	42.17	43.86
	4.0	9.06	9.66	16.68	22.08	26.40	29.96	32.96	35.54	37.78	39.75	41.51	43.75	45.19	46.49
	5.0	13.57	9.70	16.83	22.37	26.85	30.56	33.71	36.43	38.80	40.90	42.78	45.25	46.80	48.21

Table 19. Heating capacity (MBh) — fan size DS03 (I-P)

Rows	Gpm	Water Pressure Drop (ft)	Airflow (cfm)							
			900	1050	1200	1350	1500	1650	1800	1950
1-Row Capacity MBh	1.0	0.13	15.68	16.14	16.50	16.79	17.01	17.19	17.34	17.46
	2.0	0.52	21.12	22.04	22.77	23.36	23.83	24.22	24.54	24.79
	3.0	1.14	23.53	24.65	25.56	26.30	26.92	27.43	27.85	28.19
	4.0	2.01	24.96	26.24	27.27	28.12	28.82	29.40	29.88	30.28
	5.0	3.12	25.92	27.30	28.43	29.36	30.13	30.76	31.28	31.71
	6.0	4.46	26.61	28.07	29.27	30.26	31.07	31.75	32.31	32.77
2-Row Capacity MBh	1.0	0.75	31.24	32.55	33.67	34.66	35.55	36.36	37.10	37.78
	2.0	2.55	40.58	43.10	45.35	47.42	49.35	51.15	52.85	54.46
	3.0	5.25	44.69	47.89	50.82	53.54	56.11	58.56	60.90	63.14
	4.0	8.79	47.00	50.62	53.95	57.09	60.08	62.95	65.72	68.40
	5.0	13.14	48.47	52.37	55.99	59.42	62.70	65.87	68.94	71.93

Table 20. Heating capacity (kW) — fan size DS02 (SI)

Rows	L/s	Water Pressure Drop (kPa)	Airflow (L/s)												
			47	94	142	189	236	283	330	378	425	472	519	566	614
1-Row Capacity MBh	0.06	0.45	2.01	2.66	3.07	3.38	3.64	3.85	4.04	4.20	4.34	4.42	4.53	4.62	4.72
	0.13	1.73	2.26	3.14	3.75	4.24	4.66	5.03	5.36	5.65	5.92	6.00	6.22	6.43	6.61
	0.19	3.80	2.32	3.27	3.94	4.50	4.97	5.40	5.78	6.13	6.45	6.75	6.98	7.24	7.48
	0.25	6.70	2.37	3.36	4.09	4.68	5.20	5.67	6.10	6.49	6.86	7.19	7.45	7.74	8.02
	0.32	10.40	2.39	3.43	4.18	4.80	5.36	5.86	6.31	6.74	7.13	7.49	7.76	8.08	8.38
	0.38	14.89	2.41	3.47	4.24	4.89	5.47	5.99	6.47	6.91	7.32	7.71	7.98	8.33	8.65
2-Row Capacity MBh	0.06	2.27	2.65	4.28	5.35	6.12	6.69	7.14	7.49	7.79	8.04	8.25	8.44	8.60	8.74
	0.13	7.77	2.77	4.67	6.07	7.13	7.98	8.68	9.26	9.75	10.18	10.56	10.98	11.28	11.55
	0.19	16.11	2.81	4.82	6.33	7.53	8.50	9.31	10.01	10.60	11.12	11.58	12.15	12.36	12.85
	0.25	27.08	2.83	4.89	6.47	7.74	8.78	9.66	10.42	11.07	11.65	12.16	12.82	13.24	13.62
	0.32	40.56	2.84	4.93	6.56	7.87	8.96	9.88	10.68	11.37	11.99	12.54	13.26	13.72	14.13

Table 21. Heating capacity (kW) — fan size DS03 (SI)

Rows	L/s	Water Pressure Drop (kPa)	Airflow (L/s)							
			425	496	566	637	708	779	850	920
1-Row Capacity kW	0.06	0.39	4.60	4.73	4.84	4.92	4.99	5.04	5.08	5.12
	0.13	1.55	6.19	6.46	6.67	6.85	6.98	7.10	7.19	7.27
	0.19	3.41	6.90	7.22	7.49	7.71	7.89	8.04	8.16	8.26
	0.25	6.01	7.32	7.69	7.99	8.24	8.45	8.62	8.76	8.87
	0.32	9.33	7.60	8.00	8.33	8.60	8.83	9.01	9.17	9.29
	0.38	13.33	7.80	8.23	8.58	8.87	9.11	9.31	9.47	9.60
2-Row Capacity kW	0.06	2.24	9.16	9.54	9.87	10.16	10.42	10.66	10.87	11.07
	0.13	7.62	11.89	12.63	13.29	13.90	14.46	14.99	15.49	15.96
	0.19	15.69	13.10	14.04	14.89	15.69	16.44	17.16	17.85	18.50
	0.25	26.27	13.77	14.84	15.81	16.73	17.61	18.45	19.26	20.05
	0.32	39.28	14.21	15.35	16.41	17.41	18.38	19.30	20.20	21.08

Water Coil Notes (SI)

- Fouling factor = 0.0005
- Use the following equations to calculate leaving air temperature (LAT) and water temperature difference (WTD).

$$LAT = EAT + \left(\frac{kW \times 0.83}{L/s}\right)$$

$$WTD = EWT - LWT = \left(\frac{kW}{(4.19)\ L/s}\right)$$

- Capacity based on 21°C entering air temperature and 82°C entering water temperature. See correction factors for different entering conditions.

Table 22. Temperature correction factors for water pressure drop (kPa)

Average Water Temperature (°C)	93	88	82	77	71	66	60	54	49	43
Correction Factor	0.970	0.985	1.000	1.020	1.030	1.050	1.080	1.100	1.130	1.150

Table 23. Temperature correction factors for coil capacity (kW)

Entering Water Minus Entering Air (°C)	22	27	33	38	44	50	55	61	67	72
Correction Factor	0.355	0.446	0.537	0.629	0.722	0.814	0.907	1.000	1.093	1.187

Water Coil Notes (I-P)

- Fouling factor = 0.0005
- Use the following equations to calculate leaving air temperature (LAT) and water temperature difference (WTD).

$$LAT = EAT + \left(\frac{MBH \times 921.7}{Cfm}\right)$$

$$WTD = EWT - LWT = \left(\frac{2 \times MBh}{Gpm}\right)$$

- Capacity based on 70°F entering air temperature and 180°F entering water temperature. See correction factors for different entering conditions.

Table 24. Temperature correction factors for water pressure drop (ft)

Average Water Temperature (°F)	200	190	180	170	160	150	140	130	120	110
Correction Factor	0.970	0.985	1.000	1.020	1.030	1.050	1.080	1.100	1.130	1.150

Table 25. Temperature correction factors for coil capacity (MBh)

Entering Water Minus Entering Air (°F)	40	50	60	70	80	90	100	110	120	130
Correction Factor	0.355	0.446	0.537	0.629	0.722	0.814	0.907	1.000	1.093	1.187

DDC Controls

Control Logic

Direct Digital Control (DDC) controllers are today's industry standard. DDC controllers share system-level data to optimize system performance (including changing ventilation requirements, system static pressures, supply air temperatures, etc.). Variables available via a simple twisted-shielded wire pair include occupied/unoccupied status, minimum and maximum airflow setpoints, zone temperature and temperature setpoints, air valve position, airflow cfm, fan operation mode (parallel or series), reheat status (on or off), VAV unit type, air valve size, temperature correction offsets, flow correction values, ventilation fraction, and so on.

With the advent of the BACnet® open protocol, the most reliable VAV controller is now available for any system. Gone are the days of being locked into a single supplier. Trane DDC controllers provide Trane-designed solid-state electronics intended specifically for VAV applications including:

- Space temperature control
  - Series units provide variable speed ECM fan control
- Ventilation flow control (100% outside air applications)
- Flow tracking space pressurization control

Figure 20. Flow sensor single vs. airflow delivery

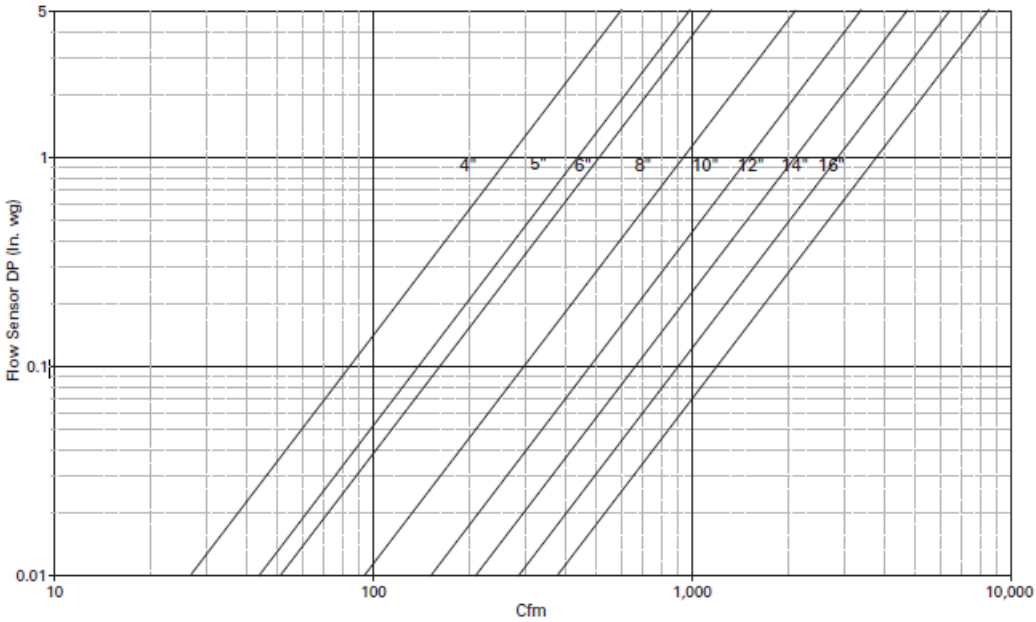

Space Temperature Control

Space temperature control (STC) logic modulates primary airflow, reheat (either local or remote), and fan airflow to maintain the desired temperature in the zone. Following are high-level descriptions of the STC control logic during occupied mode, for various fan and reheat configurations:

Series Fan-Powered Terminal

The terminal fan operates continuously during all occupied modes.

When the zone temperature is in the deadband between the active heating and cooling setpoints, the controller reduces primary airflow to the minimum primary airflow setpoint, while reheat is off.

When the zone temperature rises above the active cooling setpoint, the controller modulates primary airflow, between the minimum and maximum airflow setpoints, to maintain zone temperature at the active cooling setpoint, while reheat is off.

For units equipped with staged heat (on/off hot water or on/off electric):

When the zone temperature drops below the active heating setpoint, the controller stages heat on/off to maintain zone temperature at the active heating setpoint, while primary airflow is controlled to the minimum heating primary airflow setpoint. Stage 1 heat is energized when the zone temperature drops below the active heating setpoint; Stage 2 is energized when the zone temperature drops to 1°F (0.56° C) or more below the active heating setpoint. Stage 2 is de-energized when the zone temperature rises to warmer than 0.5°F (0.28°C) below the active heating setpoint; Stage 1 is de-energized when the zone temperature rises to warmer than 0.5°F (0.28°C) above the active heating setpoint.

For units equipped with modulated heat (modulated hot water or SCR electric):

When the zone temperature drops below the active heating setpoint, the controller modulates the hot-water valve (or SCR electric heater) to maintain zone temperature at the active heating setpoint, while primary airflow is controlled to the minimum heating primary airflow setpoint.

Variable Volume ECM

Series fan powered units with Trane BACnet® controls provide improved efficiency, acoustics, and thermal comfort via optional variable speed ECM fan control.

Air-Fi Wireless Communications Interface (WCI)

The Trane Air-Fi® Wireless Communications Interface (WCI) enables wireless communication between system controls, unit controls, and wireless sensors for Trane control products that use the BACnet® protocol. The WCI replaces the need for communications wire in all system applications.

Note: *See Air-Fi® Wireless System Installation, Operation, and Maintenance (BAS-SVX40*-EN) for more information.*

Air-Fi® Wireless Communications Sensor (WCS)

The Air-Fi Wireless Communications Sensor (WCS) is compatible with any Trane controller that uses a WCI. The WCS provides the same functions as many currently available Trane wired sensors. No further software or hardware is necessary for site evaluation, installation, or maintenance. Space temperature is standard on all models.

Note: *A service tool cannot be connected to a Trane wireless sensor.*
Three WCS models are available:

- Digital display (WCS-SD) model.
- Base (WCS-SB) model has no exposed display or user interface.
- 2% relative humidity sensor module (WCS-SH), which can be field installed inside either the WCS-SD or WCS-SB.

In most applications, one WCS-SD or WCS-SB sensor will be used per WCI acting as a router. However, up to 6 WCS-SD or WCS-SB sensors can be associated to a single equipment controller or BCI.

CO_2 Wall Sensor and Duct CO_2 Sensor

The wall- and duct-mounted carbon dioxide (CO_2) sensors are designed for use with Trane DDC control systems. Installation is made simple by attachment directly to the DDC controller. This allows the existing communication link to be used to send CO_2 data to the higher-level Trane control system.

Wall-mounted sensors can monitor individual zones, and the duct-mounted sensor is ideal for monitoring return air of a given unit. Long-term stability and reliability are assured with advanced silicon based Non-Dispersive Infrared (NDIR) technology.

When connected to a building automation system with the appropriate ventilation equipment, the Trane CO_2 sensors measure and record carbon dioxide in parts-per-million (ppm) in occupied building spaces. These carbon dioxide measurements are typically used to identify under-ventilated building zones and to override outdoor airflow beyond design ventilation rates if the CO_2 exceeds acceptable levels.

DDC Zone Sensor

The DDC zone sensor with LCD has the look and functionality of the standard Trane DDC zone sensor but has a LCD display. The sensor includes setpoint adjustment, the display of the ambient temperature, a communication jack, and occupied mode override push buttons. Also, it can be configured in the field for either a Fahrenheit or Celsius display, a continuous display of the setpoint and the offset of displayed temperatures.

The DDC zone sensor is used in conjunction with the Trane direct digital controller to sense the space temperature and to allow for user adjustment of the zone setpoint. Models with external zone setpoint adjustments and occupied mode override push buttons are available.

Factory- or Field-wired Auxiliary Temperature Sensor

The auxiliary temperature sensor is used in conjunction with the Trane DDC controller to sense duct temperature. When the DDC controller is used with a Building Automation System, the sensor temperature is reported as status only. When the DDC control is used as stand alone configuration and the sensor is placed in the supply air duct, the sensor determines the control action of the UCM in a heat/cool changeover system.

When factory mounted, the sensor is terminated. If sensor is field mounted, it is shipped loose and is terminated in the field.

Trane Control Valves

The modulating water valve is used to provide accurate control of a hot water heating coil to help maintain a zone temperature setpoint. The valve plug is an equal percentage design and comes available in four different flow capacities for proper controllability. The valves are field-adjustable for use as a two- or three-way configuration. The valves ship in a two-way configuration with a cap over the bottom port. Conversion to three-way operation is accomplished by removing the plug from the "B" port. The valve actuator contains a three-wire synchronous motor.

The direct digital controller uses a time-based signal to drive the motor to its proper position. When power is removed from the valve, it remains in its last controlled position.

Belimo Control Valves

The modulating water valve is used to provide accurate control of a hot water heating coil to help maintain a zone temperature setpoint. The valves available in seven different flow capacities for proper controllability. The valves are selectable in a two- or three-way configuration. The valve actuator contains a three-wire synchronous motor. The direct digital controller uses a time-based signal to drive the motor to its proper position. When power is removed from the valve, it remains in its last controlled position.

VAV Piping Package

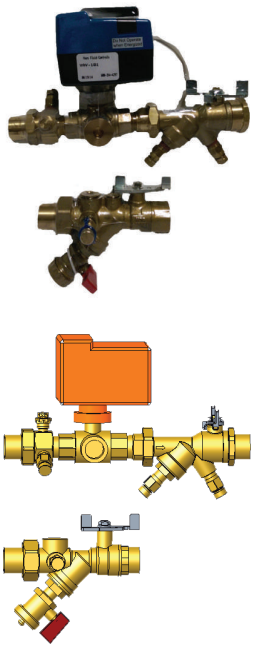

- Offered in both two-way and three-way configurations
- The automatic balancing flow control sized for the specified VAV coil and gpm.
- Field connections are NPT with coil connections sweat to match the Trane VAV water coil copper
- For three-way configuration, the connections between the ATC valve and the supply shut off assembly are sweat connections to allow for field installation of hoses or hard piping between the supply and return lines. Included in the package are:
  - P/T ports for pressure and temperature measurement on both the supply and return sections.
  - Blow down drainable filter on the supply.
  - Y-Ball combination Mesurflo automatic balance valve on the return side to isolate the coil.
  - Y-Ball combination strainer on the supply to isolate the coil.

- Each piping package is tagged to match the specific VAV terminal.
- Each piping package includes a 24V floating point control modulating control ball valve or a 2V to 10V analog control ball valve.
- The Cv is sized to match the specified gpm/coil performance of the VAV terminal unit. Package includes unions with sweat connections to the coil.

Differential Pressure Transducer

The differential pressure transducer is used in conjunction with the Trane direct digital controller and analog electronic controller. The pressure transducer measures the difference between the high-pressure and low-pressure ports of the Trane flow ring. The transducer is self-adjusting to changes in environmental temperature and humidity.

Transformers

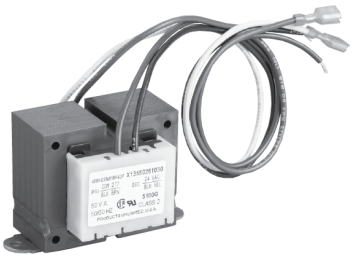

The transformer converts primary power supply voltages to the voltage required by the direct digital controller and analog. The transformer also serves to isolate the controller from other controllers which may be connected to the same power source.

Trane Actuator – 90 Second at 60 Hz Drive Time

This actuator is used with DDC controls and retrofit kits. It is available with a 3-wire floating-point control device. It is a direct-coupled over the shaft (minimum shaft length of 2.1 inches), enabling it to be mounted directly to the damper shaft without the need for connecting linkage. The actuator has an external manual gear release to allow manual positioning of the damper when the actuator is not powered.

Belimo Actuator – 95 Second Drive Time

This actuator is used with DDC controls and retrofit kits. It is available with a 3-wire floating-point control device. It is a direct-coupled over the shaft enabling it to be mounted directly to the damper shaft without the need for connecting linkage. The actuator has an external manual gear release to allow manual positioning of the damper. The actuator is UL listed and caries the CE mark.

Trane Spring Return Actuator

This actuator is used with DDC controls and is a floating-point control device. It is direct-coupled over the shaft (minimum shaft length of 2.1 inches), enabling it to be mounted directly to the damper shaft without the need for connecting linkage. The actuator is Underwriters Laboratories Standard 60730 and Canadian Standards Association C22.2 No. 24-93 certified as meeting correct safety requirements and recognized industry standards.

Electric Heater Silicon-Controlled Rectifier (SCR)

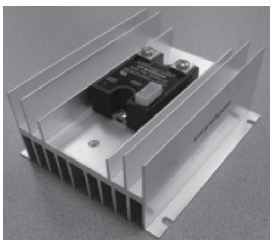

- Microprocessor based burst-fire controller / SSR
- Low-voltage control
- Output status indicator
- 0-100% Control Range
- Synchronized triggering output (P3)
- 20 AC Cycles Base Period

Controls Specifications

For all VariTrane™ units, the unit controller continuously monitors the zone temperature and varies the primary airflow as required to meet zone temperature and ventilation setpoints. Airflow is limited by adjustable minimum and maximum airflow setpoints.

Additionally, for series fan-powered units, the controller will start and run the fan continuously during the occupied mode and intermittently during the unoccupied mode. Upon a further call for heat, any hot water or electric heat associated with the unit is enabled.

Electrical Data

Series Fan-Powered Terminal Units

Table 26. VSEG – electric coil kW guidelines – minimum to maximum (PSC motor units)

Unit Size		Single-Phase Voltage					Three-Phase Voltage		
	Stages	120V	208V	240V	277V	480V	208V	480V	380V/50 Hz
Small	1	1.0 - 5.0	1.0 - 9.0	1.0 - 10.0	1.0 - 12.0	1.0 - 9.0	1.0 - 14.0	1.0 - 11.0	1.0 - 9.0
	2	1.0 - 5.0	1.0 - 9.0	1.0 - 10.0	1.0 - 12.0	1.0 - 9.0	1.0 - 14.0	1.0 - 11.0	1.0 - 9.0
Medium	1	—	3.0 - 8.0	3.0 - 9.0	3.0 - 12.0	3.0 - 20.0	3.0 - 14.0	3.0 - 20.0	3.0 - 20.0
	2	—	3.0 - 8.0	3.0 - 9.0	3.0 - 12.0	3.0 - 20.0	3.0 - 14.0	3.0 - 20.0	3.0 - 20.0
Large	1	—	5.0 - 8.0	—	5.0 - 11.0	5.0 - 20.0	5.0 - 14.0	5.0 -22.0[a]	5.0 -22.0[a]
	2	—	5.0 - 8.0	—	5. 0 - 11.0	5.0 - 20.0	5.0 - 14.0	5.0 -22.0[a]	5.0 -22.0[a]

Notes:

1. Heater KW step sizes: 0.5kw for kw's up to 8; 1kw for kw's from 8 to 18 kw; 2kw for heater kw's from 18 kw and up.
2. Heaters available in 1 or 2 stages.

[a] Highest KW available on Large VSEG model with Attenuated Cabinet and with Large VDEG model is 20kw.

Table 27. VSEG – electric coil kW guidelines – minimum to maximum (ECM units)

Unit Size		Single-Phase Voltage					Three-Phase Voltage		
	Stages	120V	208V	240V	277V	480V	208V	480V	380V/50 Hz
Small	1	1.0 - 4.5	1.0 - 8.0	1.0 - 9.0	1.0 - 10.0	1.0 - 9.0	1.0 - 14.0	1.0 - 11.0	—
	2	1.0 - 4.5	1.0 - 8.0	1.0 - 9.0	1.0 - 11.0	1.0 - 9.0	1.0 - 14.0	1.0 - 11.0	—
Medium	1	—	3.0 - 7.5	3.0 - 8.0	3.0 - 11.0	3.0 - 18.0	3.0 - 13.0	3.0 - 20.0	—
	2	—	3.0 - 7.5	3.0 - 8.0	3.0 - 11.0	3.0 - 18.0	3.0 - 13.0	3.0 - 20.0	—
Large	1	—	5.0 - 7.0	5.0 - 8.0	5.0 - 10.0	5.0 - 18.0	5.0 - 12.0	5.0 -22.0[a]	—
	2	—	5.0 - 7.0	5.0 - 8.0	5. 0 - 10.0	5.0 - 18.0	5.0 - 12.0	5.0 -22.0[a]	—

Notes:

1. Heater KW step sizes: 0.5kw for kw's up to 8; 1kw for kw's from 8 to 18 kw; 2kw for heater kw's from 18 kw and up.
2. Heaters available in 1 or 2 stages.

[a] Highest KW available on Large VSEG model with Attenuated Cabinet and with Large VDEG model is 20kw.

Table 28. Fan electrical performance (PSC)

Fan Size	HP	Maximum Fan Motor Amperage (FLA)		
		115 Vac	208 Vac	277 Vac
Small	1/3	4.3	—	1.6
Medium	1/2	6.7	—	2.4
Large	1	—	6.6	4.7

Notes:

1. Electric Heat Units - Small and Medium units with a primary voltage of 208/60/1, 208/60/3, or 240/60/1 have 115/60/1 Vac fan motors. Large units with the same voltages, have 208/60/1 Vac motors.
2. Electric Heat Units - Units with primary voltage of 277/60/1, 480/60/1 or 480/60/3 use 277 Vac fan motors.
3. With 380/50/3 use 230/50 motors.

Table 29. Fan electrical performance (ECM)

Fan Size	HP	Maximum Fan Motor Amperage (FLA)		
		115 Vac	208 Vac	277 Vac
Small	1/3	7.3	4.4	2.6
Medium	3/4	11.2	8.2	6.0

Table 29. Fan electrical performance (ECM) (continued)

Fan Size	HP	Maximum Fan Motor Amperage (FLA)		
		115 Vac	208 Vac	277 Vac
Large	1	12.8	9.4	6.9

Notes:

1. Electric heat units-units with primary voltages of 208/60/1 and 208/60/3 have optional 120-Vac or 208-Vac fan motors.
2. Electric heat units-units with primary voltages of 240/60/1 have 120-Vac or 240-Vac fan motors.
3. Electric heat units—units with primary voltages of 277/60/1, 480/60/1, or 480/60/3 have 277-Vac fan motors.

Table 30. Minimum unit electric – heat Cfm guidelines PSC

Unit KW	Heat CFM Guidelines (PSC)		
	Small	Medium	Large
1	180	320	740
1.5	180	320	740
2	180	320	740
2.5	197	320	740
3	236	320	740
3.5	275	320	740
4	315	320	740
4.5	354	354	740
5	393	393	740
5.5	432	432	740
6	472	472	740
6.5	511	511	740
7	550	550	740
7.5	590	590	740
8	629	629	740
9	708	708	740
10	786	786	786
11	865	865	865
12	944	944	944
13	1022	1022	1022
14	1101	1101	1101
15	—	1179	1179
16	—	1258	1258
17	—	1337	1337
18	—	1415	1415
20	—	1573	1573
22	—	—	1730

Table 31. Minimum unit electric – heat L/s guidelines PSC

Unit KW	Heat L/s Guidelines (PSC)		
	Small	Medium	Large
1	85	151	349
1.5	85	151	349
2	85	151	349
2.5	93	151	349

Table 31. Minimum unit electric – heat L/s guidelines PSC (continued)

Unit KW	Heat L/s Guidelines (PSC)		
	Small	Medium	Large
3	111	151	349
3.5	130	151	349
4	148	151	349
4.5	167	167	349
5	186	186	349
5.5	204	204	349
6	223	223	349
6.5	241	241	349
7	260	260	349
7.5	278	278	349
8	297	297	349
9	334	334	349
10	371	371	371
11	408	408	408
12	445	445	445
13	482	482	482
14	519	519	519
15	—	557	557
16	—	594	594
17	—	631	631
18	—	668	668
20	—	742	742
22	—	—	816

Table 32. Minimum unit electric – heat Cfm guidelines ECM

Unit KW	Heat CFM Guidelines (ECM)		
	Small	Medium	Large
1.0	160	350	360
1.5	160	350	360
2.0	160	350	360
2.5	160	350	360
3.0	197	350	360
3.5	236	350	360
4.0	275	350	360
4.5	315	350	360
5.0	354	354	360
5.5	393	393	393
6.0	432	432	432
6.5	472	472	472
7.0	511	511	511
7.5	550	550	550
8.0	590	590	590

Table 32. Minimum unit electric – heat Cfm guidelines ECM (continued)

Unit KW	Heat CFM Guidelines (ECM)		
	Small	Medium	Large
9.0	629	629	629
10.0	708	708	708
11.0	786	786	786
12.0	865	865	865
13.0	944	944	944
14.0	1022	1022	1022
15.0	—	1101	1101
16.0	—	1179	1179
17.0	—	1258	1258
18.0	—	1337	1337
20.0	—	1415	1415
22.0	—	—	1573

Table 33. Minimum unit electric – heat L/s guidelines ECM

Unit KW	Heat L/s Guidelines (ECM)		
	Small	Medium	Large
1.0	76	165	170
1.5	76	165	170
2.0	76	165	170
2.5	76	165	170
3.0	93	165	170
3.5	111	165	170
4.0	130	165	170
4.5	148	165	170
5.0	167	167	170
5.5	186	186	186
6.0	204	204	204
6.5	223	223	223
7.0	241	241	241
7.5	260	260	260
8.0	278	278	278
9.0	297	297	297
10.0	334	334	334
11.0	371	371	371
12.0	408	408	408
13.0	445	445	445
14.0	482	482	482
15.0	—	519	519
16.0	—	557	557
17.0	—	594	594
18.0	—	631	631

Table 33. Minimum unit electric – heat L/s guidelines ECM (continued)

Unit KW	Heat L/s Guidelines (ECM)		
	Small	Medium	Large
20.0	—	668	668
22.0	—	—	742

Table 34. LSxF – Fan electrical performance (ECM)

Fan Size	HP	Maximum Fan Motor Amperage (FLA)		
		115 Vac	208 Vac	277 Vac
DS02	0.75	9.6	6.6	5.2
DS03	0.75	9.6	6.6	5.2

Notes:

1. Electric heat units with primary voltages of 208/60/1 and 208/60/3 have optional 115-Vac or 208-Vac fan motors.
2. Electric heat units with primary voltages of 240/60/1 have 115-Vac fan motors.
3. Electric heat units with primary voltages of 277/60/1, 480/60/1, or 480/60/3 use 277-Vac fan motors.

Table 35. LSxF – Minimum unit electric heat guidelines (ECM)

Unit kW	Cfm	
	DS02	DS03
0.5	—	—
1	100	—
1.5	100	—
2	126	—
2.5	158	—
3	189	—
3.5	221	—
4	252	—
4.5	284	—
5	315	—
5.5	346	—
6	378	—
6.5	409	—
7	441	480
7.5	472	505
8	504	530
9	567	580
10	629	630
11	692	680
12	755	730
13	818	779
14	881	829
15	—	879
16	—	929
17	—	979
18	—	1029

Unit kW	L/s	
	DS02	DS03
0.5	—	—
1	47	—
1.5	47	—
2	60	—
2.5	75	—
3	90	—
3.5	105	—
4	119	—
4.5	135	—
5	149	—
5.5	164	—
6	179	—
6.5	194	—
7	209	227
7.5	223	238
8	238	250
9	268	274
10	297	297
11	327	321
12	357	345
13	387	368
14	416	391
15	—	415
16	—	438
17	—	462
18	—	486

Formulas

Fan-Powered Series

Minimum Circuit Ampacity (MCA) Equation

MCA = 1.25 x (motor amps + heater amps)

Maximum Overcurrent Protection (MOP) Equation

MOP = 2.25 x (motor amps + heater amps)

If the MOP value of the rating determined by the above calculations does not equal a standard current rating of an overcurrent protective device, the marked MOP rating shall be determined as follows:

- Lower standard rating. Standard current ratings are 15, 20, 25, 30, 35, 40, 45, 50, and 60.
- If the next lower standard rating is less than 125% of the electric heater load current, the standard rating next higher than the computed value shall be used.
- If the computed value of the MOP device is less than the MCA, the marked rating of the device shall be increased to the smallest standard overcurrent protective device rating that is greater than the marked MCA.
- Control fusing not applicable.

Useful Formulas

$$kW = \frac{Cfm \times ATD}{3154}$$

$$ATD = \frac{kW \times 3154}{Cfm}$$

$$ATD = \frac{kW}{1214 \times L/s}$$

$$3\varphi amps = \frac{kW \times 1000}{Primary\ Voltage \times \sqrt{3}}$$

$$1\varphi amps = \frac{kW \times 1000}{Primary\ Voltage}$$

$$kW = 1214 \times L/s \times ATD$$

Acoustics Data

Low Height Series Fan-Powered Terminal Units

Table 36. Radiated sound power (dB) – AHRI certification rating points (non attenuated)

Fan Size	Inlet Size (in.)	Airflow cfm	Fan Only - Octave Band Sound Power @ 0.25" w.g.						Fan and 100% Primary Air - Octave Band Sound Power @ 1.5" w.g.					
			2	3	4	5	6	7	2	3	4	5	6	7
Small	5	250	57	44	40	34	29	24	67	63	52	48	48	51
	6	400	60	48	43	37	33	28	68	66	55	50	50	54
	8	700	65	54	49	45	41	37	67	64	57	53	51	54
	10	1100	72	64	59	56	53	51	70	65	61	57	55	55
Medium	6	400	55	49	41	35	29	22	67	64	54	47	47	49
	8	700	60	53	45	39	35	28	66	64	55	50	49	51
	10	1100	64	58	49	44	41	35	67	64	55	51	50	53
	12	1600	71	66	56	51	49	45	72	68	60	55	54	54
	14	2050	76	72	61	58	55	54	79	75	65	60	59	58
Large	10	1100	63	58	51	45	39	35	68	64	55	49	49	53
	12	1600	69	64	57	51	47	43	70	66	58	52	50	53
	14	2100	74	70	62	57	53	51	71	68	61	55	52	54
	16	2200	76	71	63	58	55	52	72	69	62	59	58	57

Notes:
1. All data measured in accordance with industry standard AHRI 880-2011.
2. Sound power levels are in decibels, dB re 10-12 watts.
3. Discharge static pressure is 0.25" w.g.
4. Sound power levels based on ECM fan configuration.

Table 37. Discharge sound power (dB) – AHRI certification rating points (non attenuated)

Fan Size	Inlet Size (in.)	Airflow cfm	Fan Only - Octave Band Sound Power @ 0.25" w.g.					
			2	3	4	5	6	7
Small	5	250	62	58	53	49	46	41
	6	400	65	61	56	53	50	47
	8	700	71	68	62	60	57	56
	10	1100	79	77	71	71	68	68
Medium	6	400	62	56	53	51	45	41
	8	700	66	61	58	55	51	48
	10	1100	71	66	64	62	58	56
	12	1600	79	75	71	71	68	67
	14	2050	86	84	78	80	77	78
Large	10	1100	71	66	62	60	57	55
	12	1600	77	72	68	67	64	63
	14	2100	83	78	73	73	69	69
	16	2200	84	79	74	74	70	70

Notes:
1. All data measured in accordance with industry standard AHRI 880-2011.
2. Sound power levels are in decibels, dB re 10-12 watts.
3. Discharge static pressure is 0.25" w.g.
4. Sound power levels based on ECM fan configuration.

Table 38. Radiated sound power (dB) – AHRI certification rating points (attenuated)

Fan Size	Inlet Size (in.)	Airflow cfm	Fan Only - Octave Band Sound Power @ 0.25" w.g.						Fan and 100% Primary Air - Octave Band Sound Power @ 1.5" w.g.					
			2	3	4	5	6	7	2	3	4	5	6	7
Small	5	250	51	45	35	28	21	20	63	59	48	40	39	41
	6	400	54	48	38	31	24	21	67	61	51	42	39	40
	8	700	58	53	42	37	29	26	66	61	52	45	42	45
	10	1100	63	60	49	45	39	35	66	63	53	47	43	45
Medium	6	400	55	47	39	31	25	22	65	62	51	41	37	37
	8	700	58	51	43	37	30	25	66	61	52	43	38	39
	10	1100	63	57	49	43	37	31	65	60	52	45	41	41
	12	1600	69	64	57	51	46	40	68	62	55	49	45	44
	14	2050	73	69	61	55	50	45	71	65	58	52	48	46
Large	10	1100	62	56	48	41	35	30	67	62	51	44	41	41
	12	1600	67	61	54	47	42	36	68	63	54	47	44	43
	14	2100	72	66	59	52	48	42	70	65	57	51	48	46
	16	2200	73	67	60	53	50	44	70	65	58	52	48	44

Notes:
1. All data measured in accordance with industry standard AHRI 880-2011.
2. Sound power levels are in decibels, dB re 10-12 watts.
3. Discharge static pressure is 0.25" w.g.
4. Sound power levels based on ECM fan configuration.

Table 39. Discharge sound power (dB) - AHRI certification rating points (attenuated)

Fan Size	Inlet Size (in.)	Airflow cfm	Fan Only - Octave Band Sound Power @ 0.25" w.g.					
			2	3	4	5	6	7
Small	5	250	60	58	53	48	45	41
	6	400	63	62	56	52	49	46
	8	700	68	67	61	58	55	53
	10	1100	74	73	68	67	63	63
Medium	6	400	63	59	56	53	48	44
	8	700	67	63	60	58	55	53
	10	1100	73	69	66	65	62	61
	12	1600	79	76	72	72	70	69
	14	2050	84	83	80	76	74	74
Large	10	1100	73	69	65	63	59	58
	12	1600	78	74	71	69	66	66
	14	2100	83	79	75	74	71	71
	16	2200	84	80	77	76	72	73

Notes:
1. All data measured in accordance with industry standard AHRI 880-2011.
2. Sound power levels are in decibels, dB re 10-12 watts.
3. Discharge static pressure is 0.25" w.g.
4. Sound power levels based on ECM fan configuration.

Table 40. Discharge sound power (dB) – ECM fan configuration

Fan Size	Inlet Size (in.)	Air Flow		Fan and 100% Primary Air - Octave Band Sound Power @ Primary Air Inlet Static Pressure Indicated											
		CFM	L/s	0.5" w.g.						1.0" w.g.					
				2	3	4	5	6	7	2	3	4	5	6	7
DS02 ECM	5	100	47	65	56	46	46	40	34	65	57	46	47	40	34
		225	106	65	59	53	50	43	40	67	62	53	50	43	40
		350	165	69	62	56	53	47	45	72	66	56	53	47	45
DS02 ECM	6	100	47	65	55	46	46	40	34	65	56	46	46	40	34
		225	106	63	57	52	49	43	40	64	58	52	49	43	40
		400	189	66	60	57	54	48	47	68	62	57	54	48	47
		500	236	69	62	60	57	52	51	71	64	60	57	52	51
DS02 ECM	8	100	47	65	55	46	46	40	34	65	56	46	47	40	34
		300	142	66	59	55	51	45	43	68	62	55	52	46	43
		500	236	71	63	60	57	52	51	73	66	61	57	52	51
		700	330	75	68	66	63	59	58	77	70	66	63	59	58
		900	425	80	73	72	68	65	64	81	74	72	69	65	64
DS02 ECM	8X14	100	47	65	56	46	47	41	36	65	58	48	47	41	37
		400	189	65	60	57	54	48	47	67	61	57	54	49	47
		700	330	73	67	66	63	59	58	74	68	66	63	59	58
		1000	472	83	75	74	71	68	67	83	76	74	71	68	67
		1300	614	91	83	80	78	76	75	91	83	80	78	76	75

Fan Size	Inlet Size (in.)	Air Flow		Fan and 100% Primary Air - Octave Band Sound Power @ Primary Air Inlet Static Pressure Indicated											
		CFM	L/s	1.5" w.g.						2.0" w.g.					
				2	3	4	5	6	7	2	3	4	5	6	7
DS02 ECM	5	100	47	66	58	46	47	40	34	66	59	47	47	41	34
		225	106	69	64	53	50	44	40	70	66	54	50	44	41
		350	165	74	68	57	53	47	45	75	71	57	53	47	45
DS02 ECM	6	100	47	65	56	46	46	40	34	65	57	46	46	40	34
		225	106	65	60	53	49	43	40	66	61	53	50	43	40
		400	189	70	64	57	54	48	47	71	65	58	54	48	47
		500	236	72	66	61	57	52	51	74	67	61	57	52	51
DS02 ECM	8	100	47	65	56	46	47	40	34	65	56	46	47	41	34
		300	142	69	64	55	52	46	43	71	66	55	52	46	43
		500	236	74	69	61	57	52	51	76	71	61	58	52	51
		700	330	78	72	67	63	59	58	79	74	67	63	59	58
		900	425	82	75	72	69	65	64	83	76	72	69	65	64
DS02 ECM	8X14	100	47	66	60	49	48	42	39	67	61	50	49	43	40
		400	189	69	63	58	55	49	47	70	65	58	55	49	47
		700	330	75	69	66	63	59	58	76	70	67	63	59	58
		1000	472	83	76	74	71	68	67	84	77	74	71	68	67
		1300	614	91	83	80	78	76	75	91	83	80	78	76	75

Notes:

1. All data measured in accordance with industry standard AHRI 880-2011.
2. Sound power levels are in decibels, dB re 10^{-12} watts.
3. Discharge static pressure is 0.25" w.g.

Table 41. Radiated sound power (dB) – ECM fan configuration

Fan Size	Inlet Size (in.)	Air Flow		Fan and 100% Primary Air - Octave Band Sound Power @ Primary Air Inlet Static Pressure Indicated											
		CFM	L/s	0.5" w.g.						1.0" w.g.					
				2	3	4	5	6	7	2	3	4	5	6	7
DS02 ECM	5	100	47	52	50	47	43	33	28	54	51	48	44	36	33
		225	103	58	54	50	44	36	32	62	58	53	46	40	38
		350	165	63	59	54	47	39	36	66	63	58	49	44	42
DS02 ECM	6	100	47	50	46	43	39	28	26	51	47	44	40	31	30
		225	103	54	49	45	39	29	29	56	52	47	41	33	35
		400	189	58	52	48	42	33	33	61	56	52	45	37	39
		500	236	60	54	51	45	35	35	63	58	54	47	39	41
DS02 ECM	8	100	47	51	49	47	43	33	28	53	50	48	44	36	33
		300	142	57	54	50	44	35	33	61	58	53	46	40	38
		500	236	62	58	54	48	38	36	65	62	57	50	43	41
		700	330	66	61	58	52	42	38	69	65	61	54	46	44
		900	425	69	65	62	56	45	40	72	68	64	57	48	45
DS02 ECM	8X14	100	47	53	54	52	45	41	31	57	59	58	50	48	39
		400	189	58	55	52	47	38	32	62	60	58	51	45	40
		700	330	64	60	58	52	41	34	67	63	61	55	46	42
		1000	472	70	66	64	58	45	39	72	68	65	59	49	44
		1300	614	77	72	70	63	51	44	77	73	70	64	53	47

Fan Size	Inlet Size (in.)	Air Flow		Fan and 100% Primary Air - Octave Band Sound Power @ Primary Air Inlet Static Pressure Indicated											
		CFM	L/s	1.5" w.g.						2.0" w.g.					
				2	3	4	5	6	7	2	3	4	5	6	7
DS02 ECM	5	100	47	55	53	50	44	39	36	57	54	51	45	41	38
		225	103	64	61	56	48	43	41	65	63	57	49	45	44
		350	165	69	66	61	51	47	46	70	68	62	53	49	48
DS02 ECM	6	100	47	52	49	45	40	33	34	54	50	46	41	34	36
		225	103	58	55	49	42	36	38	60	57	51	44	38	41
		400	189	64	59	55	47	40	43	65	62	56	48	42	46
		500	236	66	61	57	49	42	45	67	64	59	51	44	48
DS02 ECM	8	100	47	55	52	49	45	39	36	56	53	51	46	41	38
		300	142	63	61	56	48	43	42	65	63	58	50	45	44
		500	236	68	65	60	52	46	45	69	67	62	54	48	48
		700	330	71	68	63	55	48	47	73	70	66	57	51	50
		900	425	74	70	66	59	51	49	75	72	68	60	53	51
DS02 ECM	8X14	100	47	60	63	62	54	52	44	62	65	65	58	55	47
		400	189	65	63	62	55	49	44	67	66	65	58	52	48
		700	330	69	66	64	58	51	46	71	68	67	60	54	50
		1000	472	73	70	67	61	53	48	75	71	69	63	56	51
		1300	614	78	74	71	65	55	50	79	75	72	66	58	53

Notes:

1. All data measured in accordance with industry standard AHRI 880-2011.
2. Sound power levels are in decibels, dB re 10^{-12} watts.
3. AHRI 880-2011 certification points appear shaded, remaining application points are beyond the scope of the certification program.
4. Discharge static pressure is 0.25" w.g.

Table 42. Fan only sound power (dB) – ECM fan configuration

Fan Size	Inlet Size (in.)	Airflow		Discharge						Radiated					
		CFM	L/s	2	3	4	5	6	7	2	3	4	5	6	7
DS02 ECM	5	100	47	65	55	46	46	40	34	49	46	43	39	27	21
		225	106	61	57	52	49	43	40	52	46	43	39	24	19
		350	165	62	58	56	53	47	45	53	47	44	40	25	20
DS02 ECM	6	100	47	65	55	46	46	40	34	49	46	43	39	27	21
		225	106	61	57	52	49	43	40	52	46	43	39	24	19
		400	189	63	59	57	54	48	47	55	48	45	41	26	22
		500	236	66	61	60	57	52	51	57	50	48	43	29	24
DS02 ECM	8	100	47	65	55	46	46	40	34	49	46	43	39	27	21
		300	142	62	58	55	51	45	43	53	47	44	39	24	20
		500	236	66	61	60	57	52	51	57	50	48	43	29	24
		700	330	73	67	66	63	59	58	62	55	53	48	34	29
		900	425	79	72	72	68	65	64	67	60	58	52	39	34
DS02 ECM	8x14	100	47	65	55	46	46	40	34	49	46	43	39	27	21
		400	189	63	59	57	54	48	47	55	48	45	41	26	22
		700	330	73	67	66	63	59	58	62	55	53	48	34	29
		1000	472	82	75	74	71	68	67	69	62	60	54	42	37
		1300	614	91	83	80	78	76	75	76	69	66	59	49	44

Notes:

1. All data measured in accordance with industry standard AHRI 880-2011.
2. Sound power levels are in decibels, dB re 10^{-12} watts.
3. AHRI 880-2011 certification points appear shaded, remaining application points are beyond the scope of the certification program.
4. Discharge static pressure is 0.25" w.g.

Table 43. Sound noise criteria (NC) – fan and 100% primary – ECM fan configuration

Fan Size	Inlet Size (in.)	Airflow		NC Levels @ Primary Air Inlet Static Pressure Indicated											
				Discharge						Radiated					
		CFM	L/s	Fan Only	0.5" w.g.	1.0" w.g.	1.5" w.g.	2.0" w.g.	3.0" w.g.	Fan Only	0.5" w.g.	1.0" w.g.	1.5" w.g.	2.0" w.g.	3.0" w.g.
DS02 ECM	5	100	47	21	17	18	18	19	20	17	21	22	24	25	27
		225	106	16	17	20	23	25	28	16	24	28	30	33	36
		350	165	18	22	26	28	30	34	18	29	33	36	39	42
DS02 ECM	6	100	47	21	21	21	21	21	22	17	17	18	19	20	22
		225	106	16	18	20	21	22	24	16	18	21	23	26	29
		400	189	19	23	25	27	29	31	19	22	26	29	32	35
		500	236	23	26	29	31	32	34	22	25	29	32	34	38
DS02 ECM	8	100	47	21	17	17	17	17	18	17	21	22	23	25	27
		300	142	17	18	21	23	25	29	17	24	28	31	33	37
		500	236	23	24	27	29	31	34	22	28	32	36	38	42
		700	330	31	30	32	34	35	37	27	33	36	39	41	45
		900	425	39	37	38	39	40	41	33	37	40	42	44	48

Table 43. Sound noise criteria (NC) – fan and 100% primary – ECM fan configuration (continued)

Fan Size	Inlet Size (in.)	Airflow		NC Levels @ Primary Air Inlet Static Pressure Indicated											
				Discharge						Radiated					
		CFM	L/s	Fan Only	0.5" w.g.	1.0" w.g.	1.5" w.g.	2.0" w.g.	3.0" w.g.	Fan Only	0.5" w.g.	1.0" w.g.	1.5" w.g.	2.0" w.g.	3.0" w.g.
DS02 ECM	8x14	100	47	21	17	18	19	20	23	17	26	33	37	41	45
		400	189	19	17	20	22	24	27	19	27	33	37	41	45
		700	330	31	28	29	30	32	34	27	32	36	39	42	47
		1000	472	43	40	40	41	41	42	35	39	41	43	45	49
		1300	614	54	51	51	51	51	51	43	45	46	47	48	51

Notes:
1. "–" represents NC levels below NC 15.
2. NC values are calculated using modeling assumptions based on AHRI 885-2008 Appendix E.

Table 44. AHRI 885-2008 add discharge transfer function assumptions

	Octave Band					
	2	3	4	5	6	7
Small Box (<300 Cfm)	-24	-28	-39	-53	-59	-40
Medium Box (300-700 Cfm)	-27	-29	-40	-51	-53	-39
Large Box (>700 Cfm)	-29	-30	-41	-51	-52	-39

Notes:
1. Subtract from terminal unit sound power to determine discharge sound pressure in the space.
2. NC Values are calculated using current Industry Standard AHRI 885-2008. Radiated Transfer Function obtained from Appendix E, Type 2 Mineral Fiber Insulation.
3. Application ratings are outside the scope of the Certification Program.

Table 45. AHRI 885-2008 radiated transfer function assumptions

	Octave Band					
	2	3	4	5	6	7
Type 2- Mineral Fiber Insulation	-18	-19	-20	-26	-31	-36

Notes:
1. Subtract from terminal unit sound power to determine discharge sound pressure in the space.
2. NC Values are calculated using current Industry Standard AHRI 885-2008. Radiated Transfer Function obtained from Appendix E, Type 2 Mineral Fiber Insulation.
3. Application ratings are outside the scope of the Certification Program.

Dimensional Data

Series Fan-Powered Terminal Units

Figure 21. Series — cooling only (VSCG)

SERIES COOLING ONLY (VSCG) WITHOUT ATTENUATOR

FAN SIZE	INLET SIZE AVAILABILTY		H	W	L	DISCHARGE DIMENSIONS		C	D	Max Unit Wt Lbs (kg)
	NOMINAL Ø (INCHES)	NOMINAL Ø (mm)				A	B			
SMALL	4, 5, 6, 8, 10	102,127,153,204,254	17.50" (445 mm)	18.00" (458 mm)	40.00" (1016 mm)	16.75" (426 mm)	14.25" (362 mm)	0.50" (13 mm)	1.50" (39 mm)	79 (36)
MEDIUM	4, 5, 6, 8, 10, 12, 14	102,127,153,204,254,305,356	17.50" (445 mm)	26.00" (661 mm)	40.00" (1016 mm)	23.25" (591 mm)	14.25" (362 mm)	2.00" (51 mm)	1.50" (39 mm)	123 (56)
LARGE	6, 8, 10, 12, 14, 16	153,204,254,305,356,407	20.00" (508 mm)	30.00" (762 mm)	40.00" (1016 mm)	27.25" (693 mm)	16.50" (420 mm)	2.00" (51 mm)	1.75" (45 mm)	151 (69)

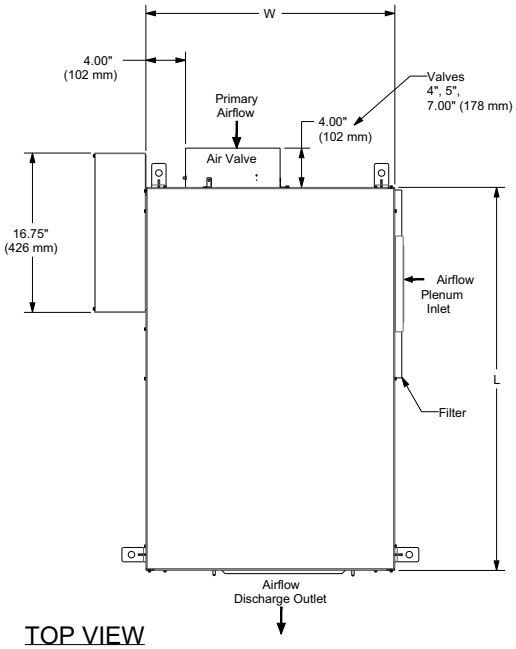

TOP VIEW

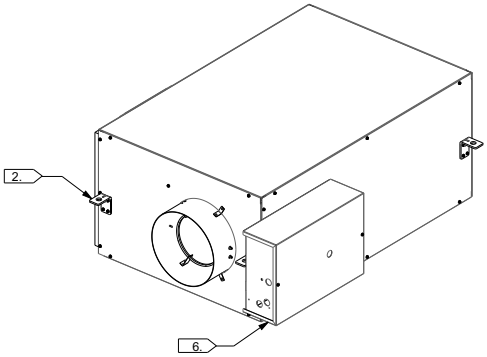

FAN SIZE	FILTER SIZE
SMALL	16" x 20" (406 mm x 508 mm)
MEDIUM	16" x 20" (406 mm x 508 mm)
LARGE	18" x 20" (458 mm x 508 mm)

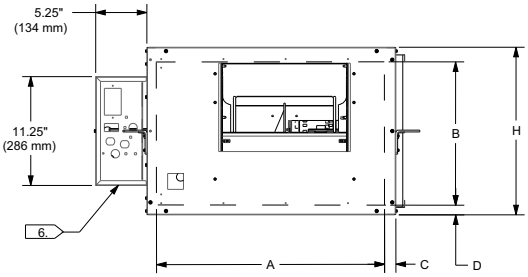

DISCHARGE VIEW

CUSTOMER NOTE:

1. Allow a minimum 6" (152 mm) plenum inlet clearance for unducted installations.
2. See Installation Documents for exact hanger bracket location.
3. Remove top or bottom panel for motor access.
4. Air valve centered between top and bottom panel.
5. All high & low voltage controls have same-side NEC jumpback clearance. (Left-hand shown, facing discharge.)
6. Control box enclosure provided with all control types. Actuator, controller, and fan controls located in this area.
7. Left-hand unit shown. Rotate unit 180 to make right-hand.
8. Weights are an estimation and will vary based on selected options.

Figure 22. Series — cooling only (VSCG) with suppressor attenuator

SERIES COOLING ONLY (VSCG) WITH ATTENUATOR

FAN SIZE	INLET SIZE AVAILABILTY		H	W	L	DISCHARGE DUCT DIMENSIONS		C	D	Max Unit Wt Lbs (kg)
	NOMINAL Ø (INCHES)	NOMINAL Ø (mm)				A	B			
SMALL	4,5,6,8,10	102,127,153,204,254	17.50" (445 mm)	33.50" (851 mm)	40.00" (1016 mm)	16.75" (426 mm)	14.25" (362 mm)	16.00" (407 mm)	1.50" (39 mm)	110 (50)
MEDIUM	4,5,6,8,10,12,14	102,127,153,204,254,305,356	17.50" (445 mm)	41.50" (1055 mm)	40.00" (1016 mm)	23.25" (591 mm)	14.25" (362 mm)	17.50" (445 mm)	1.50" (39 mm)	155 (71)
LARGE	6,8,10,12,14,16	153,204,254,305,356,407	20.00" (508 mm)	45.50" (1156 mm)	40.00" (1016 mm)	27.25" (693 mm)	16.50" (420 mm)	17.50" (445 mm)	1.75" (45 mm)	192 (88)

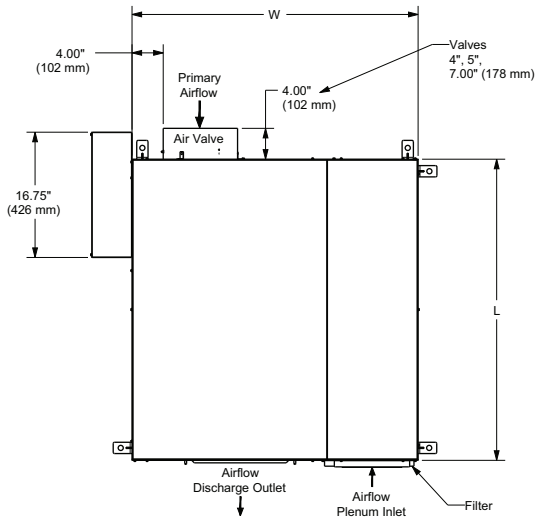

TOP VIEW

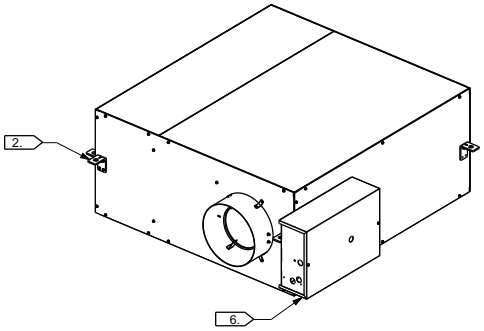

FAN SIZE	FILTER SIZE
SMALL	16" x 12" (406 mm x 305 mm)
MEDIUM	16" x 12" (406 mm x 305 mm)
LARGE	18" x 12" (305 mm x 305 mm)

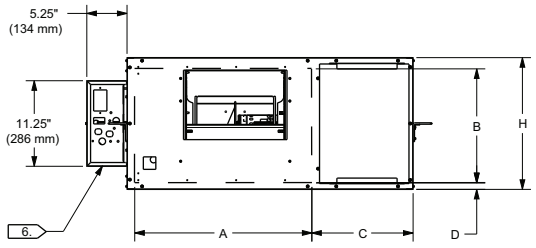

DISCHARGE VIEW

CUSTOMER NOTE:

1. Allow a minimum 6" (152 mm) plenum inlet clearance for unducted installations.
2. See Installation Documents for exact hanger bracket location.
3. Remove top or bottom panel for motor access.
4. Air valve centered between top and bottom panel.
5. All high & low voltage controls have same-side NEC jumpback clearance. (Left-hand shown, facing discharge.)
6. Control box enclosure provided with all control types. Actuator, controller, and fan controls located in this area.
7. Left-hand unit shown. Rotate unit 180˚ to make right-hand.
8. Weights are an estimation and will vary based on selected options.

Figure 23. Series — hot water (VSWG)

SERIES HOT WATER (VSWG) WITHOUT ATTENUATOR

FAN SIZE	INLET SIZE AVAILABILTY		H	W	L	DISCHARGE DIMENSIONS		C	D	Max Unit Wt Lbs (kg)
	NOMINAL Ø (INCHES)	NOMINAL Ø (mm)				A	B			
SMALL	4,5,6,8,10	102,127,153,204,254	17.50" (445 mm)	18.00" (458 mm)	40.00" (1016 mm)	16.75" (426 mm)	14.25" (362 mm)	0.50" (13 mm)	1.50" (39 mm)	79* (36)
MEDIUM	4,5,6,8,10,12,14	102,127,153,204,254,305,356	17.50" (445 mm)	26.00" (661 mm)	40.00" (1016 mm)	23.25" (591 mm)	14.25" (362 mm)	2.00" (51 mm)	1.50" (39 mm)	123* (56)
LARGE	6,8,10,12,14,16	153,204,254,305,356,407	20.00" (508 mm)	30.00" (762 mm)	40.00" (1016 mm)	27.25" (693 mm)	16.50" (420 mm)	2.00" (51 mm)	1.75" (45 mm)	151* (69)

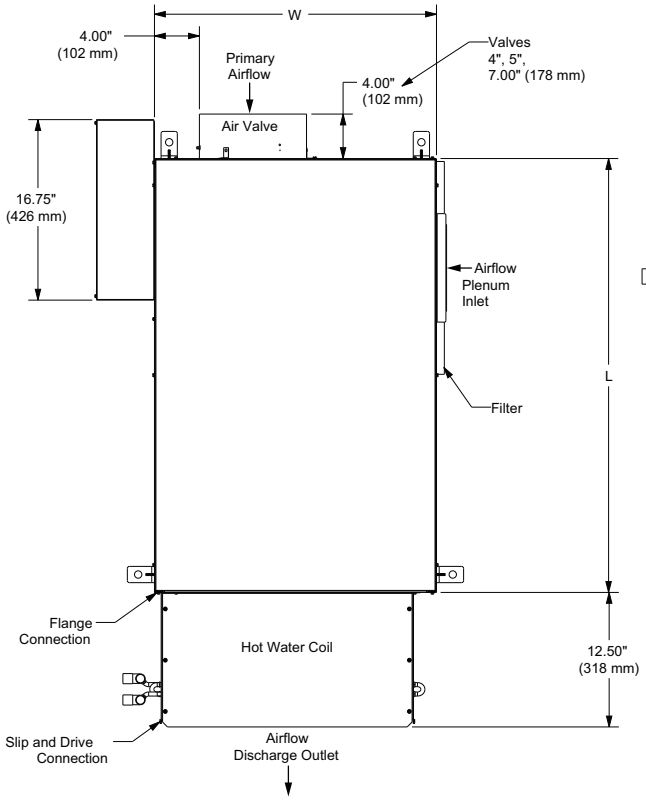

TOP VIEW

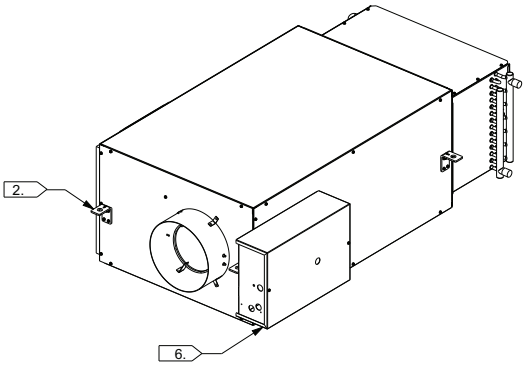

FAN SIZE	FILTER SIZE
SMALL	16" x 20" (406 mm x 508 mm)
MEDIUM	16" x 20" (406 mm x 508 mm)
LARGE	18" x 20" (458 mm x 508 mm)

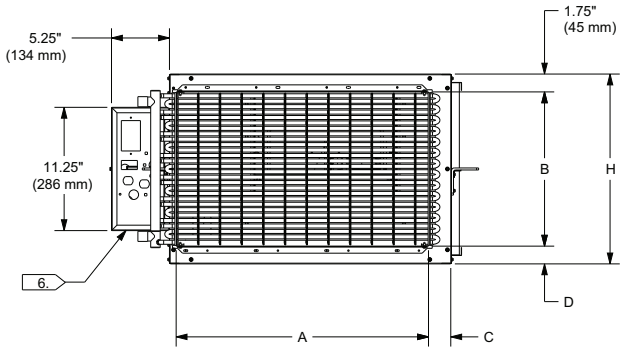

DISCHARGE VIEW

CUSTOMER NOTE:

1. Allow a minimum 6" (152 mm) plenum inlet clearance for unducted installations.
2. See Installation Documents for exact hanger bracket location.
3. Remove top or bottom panel for motor access.
4. Air valve centered between top and bottom panel.
5. All high & low voltage controls have same-side NEC jumpback clearance. (Left-hand shown, facing discharge.)
6. Control box enclosure provided with all control types. Actuator, controller, and fan controls located in this area. Control box centered on unit height.
7. Left-hand unit shown. Rotate unit 180 to make right-hand.
8. Weights are an estimation and will vary based on selected options.

* Unit Weight does not include coil.

Figure 24. Series — hot water (VSWG) with suppressor attenuator

SERIES HOT WATER (VSWG) WITH ATTENUATOR

FAN SIZE	INLET SIZE AVAILABILTY		H	W	L	DISCHARGE DUCT DIMENSIONS		C	D	Max Unit Wt Lbs (kg)
	NOMINAL Ø (INCHES)	NOMINAL Ø (mm)				A	B			
SMALL	4,5,6,8,10	102,127,153,204,254	17.50" (445 mm)	33.50" (851 mm)	40.00" (1016 mm)	16.75" (426 mm)	14.25" (362 mm)	16.00" (407 mm)	1.50" (39 mm)	110* (50)
MEDIUM	4,5,6,8,10,12,14	102,127,153,204,254,305,356	17.50" (445 mm)	41.50" (1055 mm)	40.00" (1016 mm)	23.25" (591 mm)	14.25" (362 mm)	17.50" (445 mm)	1.50" (39 mm)	155* (71)
LARGE	6,8,10,12,14,16	153,204,254,305,356,407	20.00" (508 mm)	45.50" (1156 mm)	40.00" (1016 mm)	27.25" (693 mm)	16.50" (420 mm)	17.50" (445 mm)	1.75" (45 mm)	192* (88)

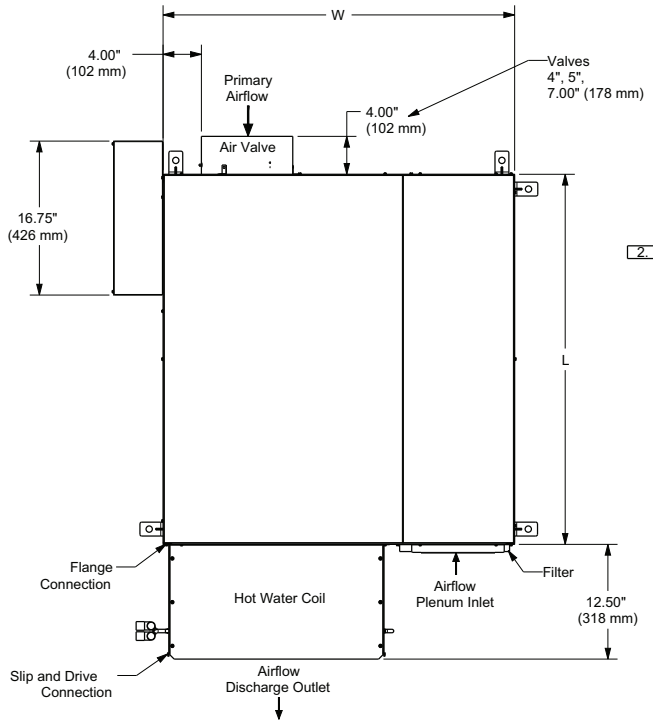

TOP VIEW

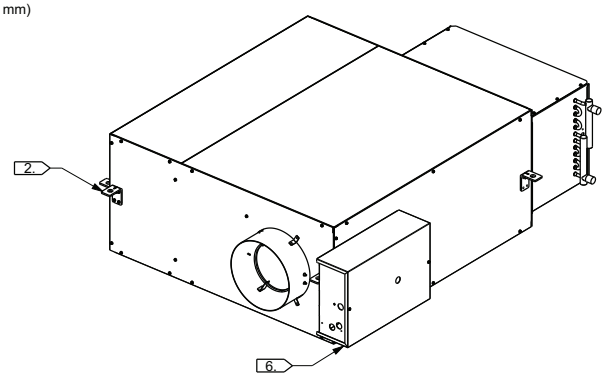

FAN SIZE	FILTER SIZE
SMALL	16" x 12" (406 mm x 305 mm)
MEDIUM	16" x 12" (406 mm x 305 mm)
LARGE	18" x 12" (458 mm x 305 mm)

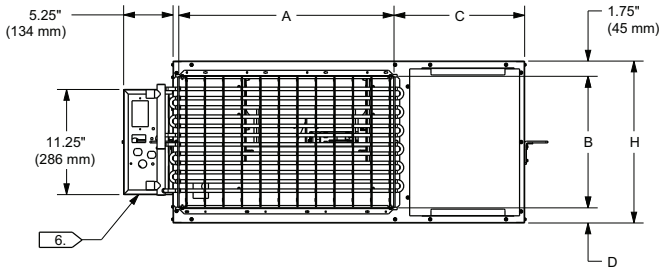

DISCHARGE VIEW

CUSTOMER NOTE:

1. Allow a minimum 6" (152 mm) plenum inlet clearance for unducted installations.
2. See Installation Documents for exact hanger bracket location.
3. Remove top or bottom panel for motor access.
4. Air valve centered between top and bottom panel.
5. All high & low voltage controls have same-side NEC jumpback clearance. (Left-hand shown, facing discharge.)
6. Control box enclosure provided with all control types. Actuator, controller, and fan controls located in this area.
7. Left-hand unit shown. Rotate unit 180˚ to make right-hand.
8. Weights are an estimation and will vary based on selected options.

* Unit Weight does not include coil.

Figure 25. Series coil assembly (1-row)

COIL INFORMATION FOR SERIES 1-ROW COILS

COIL INFORMATION FOR SERIES COIL ASSEMBLY						
FAN SIZE	COIL CONNECTION 1 ROW O.D.	A	B	L	H	W
SMALL	0.875" (22 mm)	10.00" (254 mm)	2.00" (51 mm)	16.75" (426 mm)	14.25" (362 mm)	12.50" (318 mm)
MEDIUM	0.875" (22 mm)	10.00" (254 mm)	2.00" (51 mm)	23.25" (591 mm)	14.25" (362 mm)	12.50" (318 mm)
LARGE	0.875" (22 mm)	13.75" (350 mm)	1.25" (32 mm)	27.25" (693 mm)	16.75" (426 mm)	12.50" (318 mm)

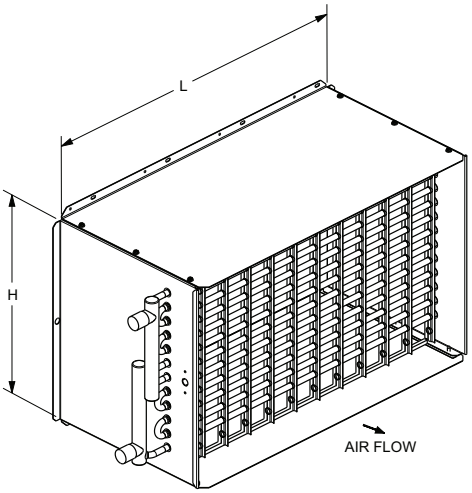

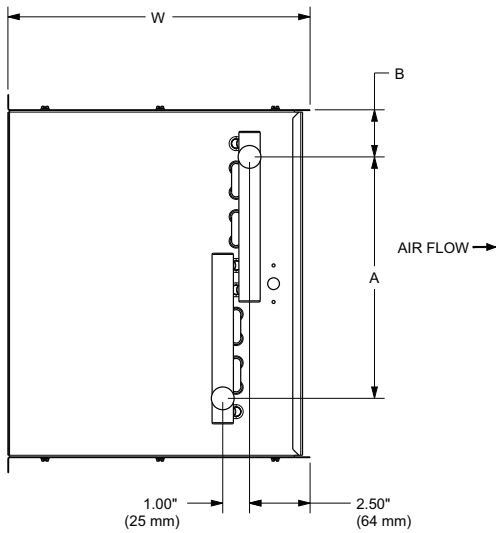

HEADER SIDE VIEW

FAN SIZE	INTERNAL VOLUME GAL (in. ^{3})	OPERATING WEIGHT lbs (kg)
SMALL	.11 (25.4)	13.4 (6.1)
MEDIUM	.14 (32.3)	15.6 (7.1)
LARGE	.22 (50.8)	19.6 (8.9)

CUSTOMER NOTE:

1. Location of coil connections is determined by facing air stream. Left-hand coil connections shown, Right-hand opposite.
2. Coil furnished with stub sweat connections.
3. Use port at bottom for inlet and top for outlet on single row coils. Water inlet always on the downstream side of the hot water coil. Water outlet always on the upstream side of the hot water coil.
4. Coil height and width is dependent upon unit height and width.

Figure 26. Series coil assembly (2-rows)

COIL INFORMATION FOR SERIES 2-ROW COILS

COIL INFORMATION FOR SERIES COIL ASSEMBLY						
FAN SIZE	COIL CONNECTION 2 ROW O.D.	A	B	L	H	W
SMALL	0.875" (22 mm)	12.50" (318 mm)	1.00" (25 mm)	16.75" (426 mm)	14.25" (362 mm)	12.50" (318 mm)
MEDIUM	0.875" (22 mm)	12.50" (318 mm)	1.00" (25 mm)	23.25" (591 mm)	14.25" (362 mm)	12.50" (318 mm)
LARGE	0.875" (22 mm)	14.50" (369 mm)	1.00" (25 mm)	27.25" (693 mm)	16.75" (426 mm)	12.50" (318 mm)

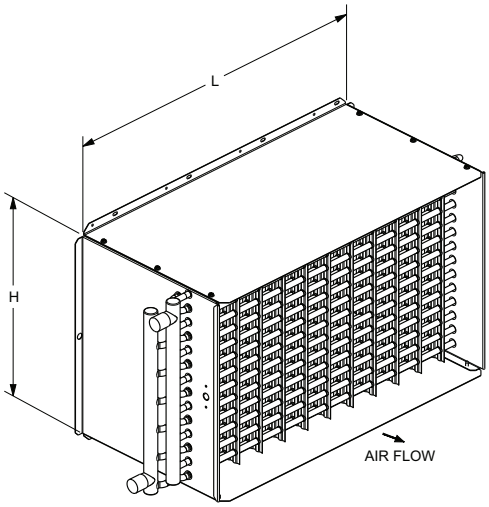

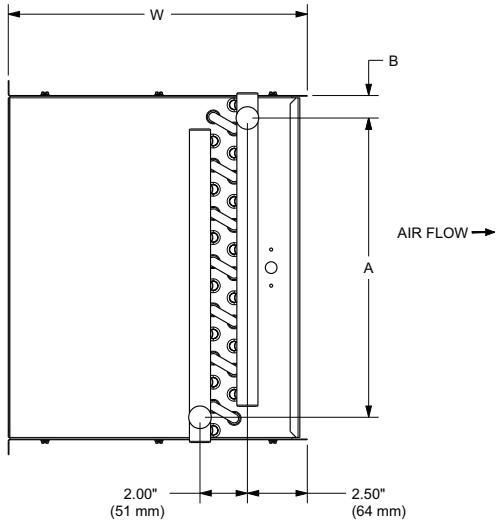

HEADER SIDE VIEW

FAN SIZE	INTERNAL VOLUME GAL (in. ^{3})	OPERATING WEIGHT lbs (kg)
SMALL	.25 (58.6)	17.2 (7.8)
MEDIUM	.33 (75.1)	20.4 (9.3)
LARGE	.42 (97.3)	26.0 (11.8)

CUSTOMER NOTE:

1. Location of coil connections is determined by facing air stream. Left-hand coil connections shown, Right-hand opposite.
2. Coil furnished with stub sweat connections.
3. Use port at bottom for inlet and top for outlet on single row coils. For multirow coils, always plumb in counter flow orientation. Water inlet always on the downstream side of the hot water coil. Water outlet always on the upstream side of the hot water coil.
4. Coil height and width is dependent upon unit height and width.

Figure 27. Series coil assembly (3-rows)

COIL INFORMATION FOR SERIES 3-ROW COILS

COIL INFORMATION FOR SERIES COIL ASSEMBLY						
FAN SIZE	COIL CONNECTION 3 ROW O.D.	A	B	L	H	W
SMALL	0.875" (22 mm)	12.00" (305 mm)	1.00" (25 mm)	16.75" (426 mm)	14.25" (362 mm)	12.50" (318 mm)
MEDIUM	0.875" (22 mm)	12.00" (305 mm)	1.00" (25 mm)	23.25" (591 mm)	14.25" (362 mm)	12.50" (318 mm)
LARGE	0.875" (22 mm)	14.00" (356 mm)	1.00" (25 mm)	27.25" (693 mm)	16.75" (426 mm)	12.50" (318 mm)

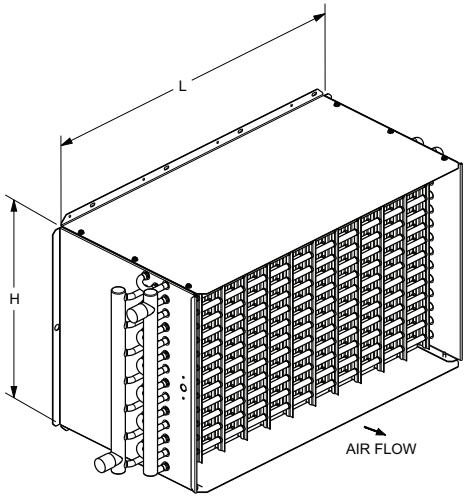

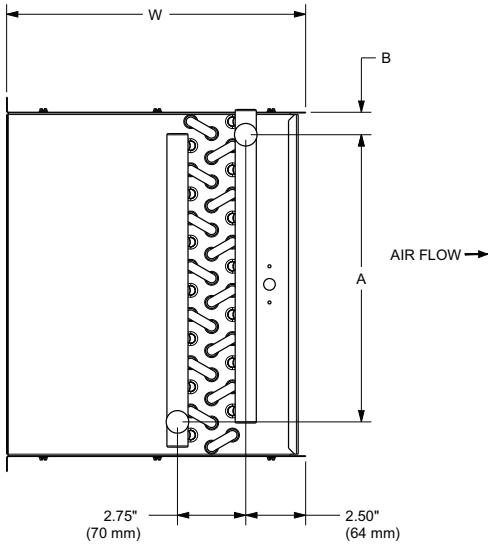

HEADER SIDE VIEW

FAN SIZE	INTERNAL VOLUME GAL (in. ^{3})	OPERATING WEIGHT lbs (kg)
SMALL	.37 (84.7)	20.6 (9.4)
MEDIUM	.47 (109.5)	24.8 (11.3)
LARGE	.62 (142.8)	32.5 (14.8)

CUSTOMER NOTE:

1. Location of coil connections is determined by facing air stream. Left-hand coil connections shown, Right-hand opposite.
2. Coil furnished with stub sweat connections.
3. Use port at bottom for inlet and top for outlet on single row coils. For multirow coils, always plumb in counter flow orientation. Water inlet always on the downstream side of the hot water coil. Water outlet always on the upstream side of the hot water coil.
4. Coil height and width is dependent upon unit height and width.

Figure 28. Series coil assembly (4-rows)

COIL INFORMATION FOR SERIES 4-ROW COILS

COIL INFORMATION FOR SERIES COIL ASSEMBLY						
FAN SIZE	COIL CONNECTION 4 ROW O.D.	A	B	L	H	W
SMALL	0.875" (22 mm)	12.50" (318 mm)	1.00" (25 mm)	16.75" (426 mm)	14.25" (362 mm)	12.50" (318 mm)
MEDIUM	0.875" (22 mm)	12.50" (318 mm)	1.00" (25 mm)	23.25" (591 mm)	14.25" (362 mm)	12.50" (318 mm)
LARGE	0.875" (22 mm)	14.50" (369 mm)	1.00" (25 mm)	27.25" (693 mm)	16.75" (426 mm)	12.50" (318 mm)

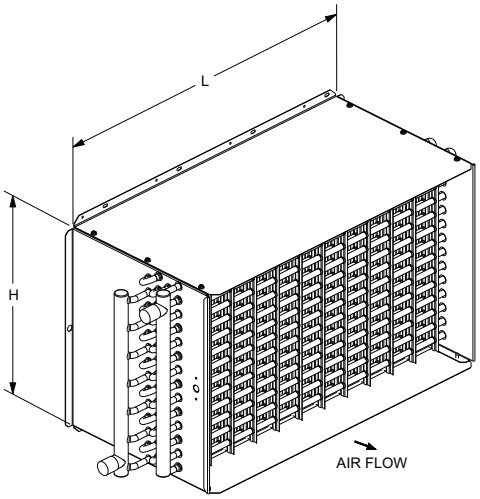

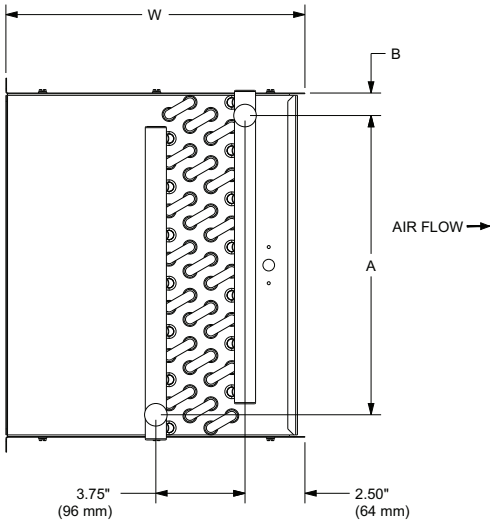

HEADER SIDE VIEW

FAN SIZE	INTERNAL VOLUME GAL (in. ^{3})	OPERATING WEIGHT lbs (kg)
SMALL	.48 (110.9)	24.0 (10.9)
MEDIUM	.62 (143.9)	29.1 (13.3)
LARGE	.86 (188.4)	38.9 (17.7)

CUSTOMER NOTE:

1. Location of coil connections is determined by facing air stream. Left-hand coil connections shown, Right-hand opposite.
2. Coil furnished with stub sweat connections.
3. Use port at bottom for inlet and top for outlet on single row coils. For multirow coils, always plumb in counter flow orientation. Water inlet always on the downstream side of the hot water coil. Water outlet always on the upstream side of the hot water coil.
4. Coil height and width is dependent upon unit height and width.

Figure 29. Series — electric (VSEG)

SERIES ELECTRIC (VSEG) WITHOUT ATTENUATOR

FAN SIZE	INLET SIZE AVAILABILTY		H	W	L	DISCHARGE DIMENSIONS		C	D	Max Unit Wt Lbs (kg)
	NOMINAL Ø (INCHES)	NOMINAL Ø (mm)				A	B			
SMALL	4, 5, 6, 8, 10	102,127,153,204,254	17.50" (445 mm)	18.00" (458 mm)	40.00" (1016 mm)	11.50" (293 mm)	14.25" (362 mm)	2.25" (58 mm)	17.50" (445 mm)	114 (52)
MEDIUM	4, 5, 6, 8, 10, 12, 14	102,127,153,204,254,305,356	17.50" (445 mm)	26.00" (661 mm)	40.00" (1016 mm)	19.00" (483 mm)	14.25" (362 mm)	2.00" (51 mm)	25.00" (637 mm)	163 (74)
LARGE	6, 8, 10, 12, 14, 16	153,204,254,305,356,407	20.00" (508 mm)	30.00" (762 mm)	40.00" (1016 mm)	23.00" (585 mm)	16.50" (420 mm)	2.00" (51 mm)	29.00" (737 mm)	196 (89)

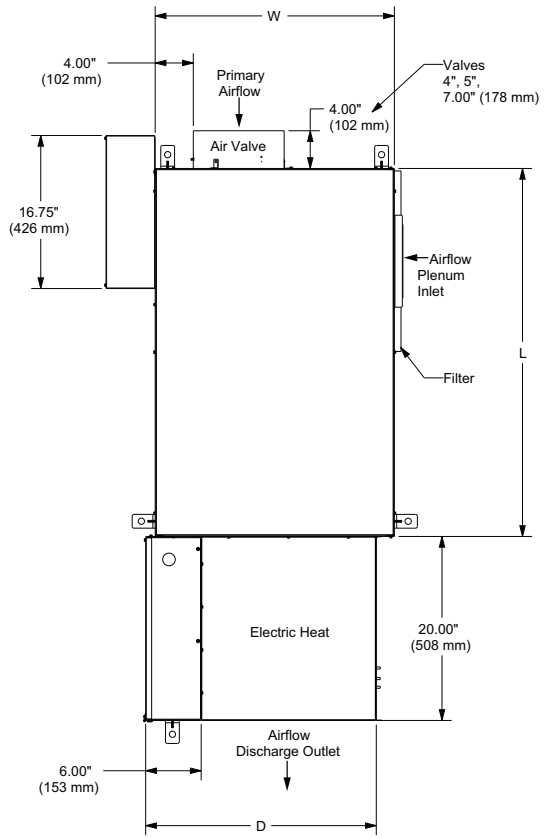

TOP VIEW

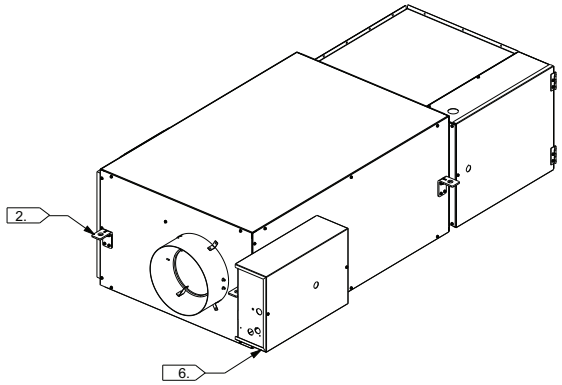

FAN SIZE	FILTER SIZE
SMALL	16" x 20" (406 mm x 508 mm)
MEDIUM	16" x 20" (406 mm x 508 mm)
LARGE	18" x 20" (458 mm x 508 mm)

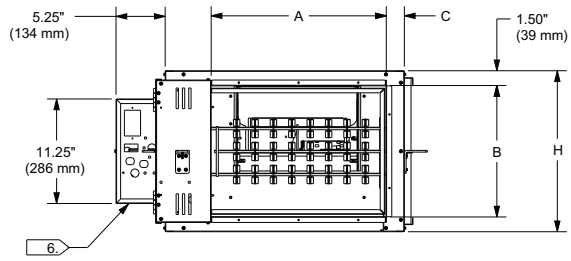

DISCHARGE VIEW

CUSTOMER NOTE:

1. Allow a minimum 6" (152 mm) plenum inlet clearance for unducted installations.
2. See Installation Documents for exact hanger bracket location.
3. Remove top or bottom panel for motor access.
4. Air valve centered between top and bottom panel.
5. All high & low voltage controls have same-side NEC jumpback clearance. (Left-hand shown, facing discharge.)
6. Control box enclosure provided with all control types. Actuator, controller, and fan controls located in this area. Control box centered on unit height.
7. Left-hand unit shown. Rotate unit 180˚ to make right-hand.
8. Weights are an estimation and will vary based on selected options.

Figure 30. Series — electric (VSEG) with suppressor attenuator

SERIES ELECTRIC (VSEG) WITH ATTENUATOR

FAN SIZE	INLET SIZE AVAILABILTY		H	W	L	DISCHARGE DUCT DIMENSIONS		C	D	Max Unit Wt Lbs (kg)
	NOMINAL Ø (INCHES)	NOMINAL Ø (mm)				A	B			
SMALL	4,5,6,8,10	102,127,153,204,254	17.50" (445 mm)	33.50" (851 mm)	40.00" (1016 mm)	11.50" (293 mm)	14.25" (362 mm)	16.00" (407 mm)	17.50" (445 mm)	145 (66)
MEDIUM	4,5,6,8,10,12,14	102,127,153,204,254,305,356	17.50" (445 mm)	41.50" (1055 mm)	40.00" (1016 mm)	19.00" (483 mm)	14.25" (362 mm)	17.50" (445 mm)	25.00" (635 mm)	195 (89)
LARGE	6,8,10,12,14,16	153,204,254,305,356,407	20.00" (508 mm)	45.50" (1156 mm)	40.00" (1016 mm)	23.00" (691 mm)	16.50" (420 mm)	17.50" (445 mm)	29.00" (737 mm)	237 (108)

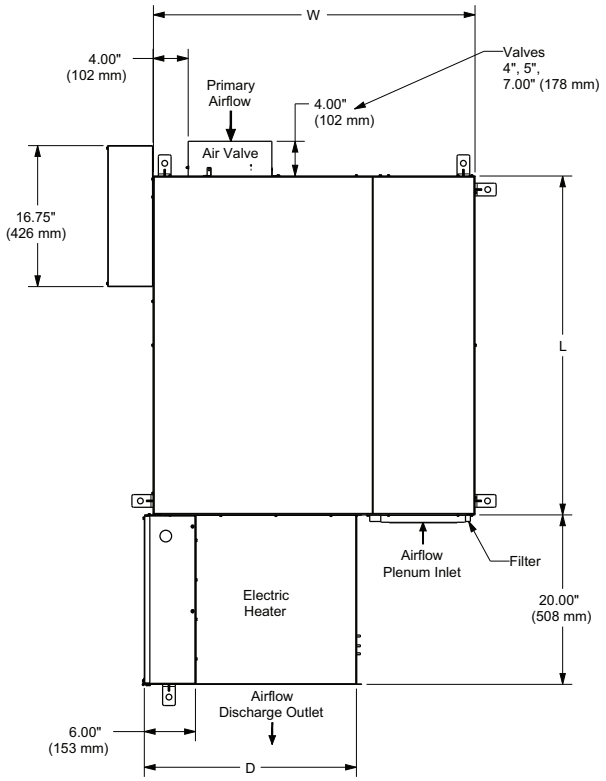

TOP VIEW

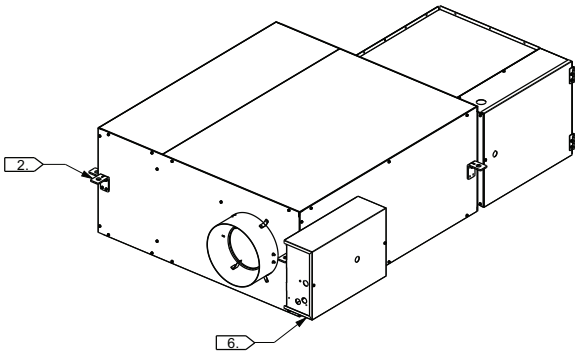

FAN SIZE	FILTER SIZE
SMALL	16" x 12" (406 mm x 305 mm)
MEDIUM	16" x 12" (406 mm x 305 mm)
LARGE	18" x 12" (458 mm x 305 mm)

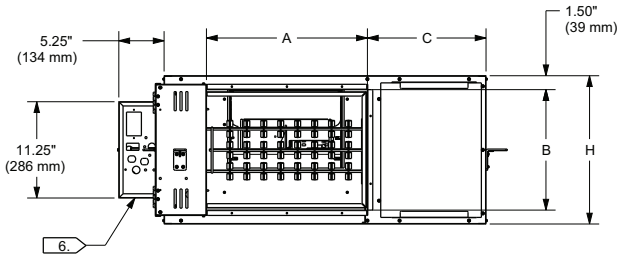

DISCHARGE VIEW

CUSTOMER NOTE:

1. Allow a minimum 6" (152 mm) plenum inlet clearance for unducted installations.
2. See Installation Documents for exact hanger bracket location.
3. Remove top or bottom panel for motor access.
4. Air valve centered between top and bottom panel.
5. All high & low voltage controls have same-side NEC jumpback clearance. (Left-hand shown, facing discharge.)
6. Control box enclosure provided with all control types Actuator, controller, and fan controls located in this area.
7. Left-hand unit shown. Rotate unit 180˚ to make right-hand.
8. Weights are an estimation and will vary based on selected options.

Low-Height Series Fan-Powered Terminal Units

Figure 31. Low-height series — cooling only (LSCF) with thinline suppressor — fan sizes DS02

Unit Model	LSCF
Nominal Valve Size & Depth	8" Dia. x 4" Depth
Nominal Fan Size	DS02 Fan
Filter Size	7" x 7" x 1"

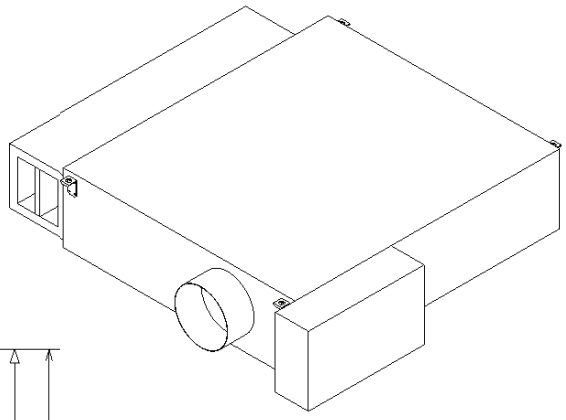

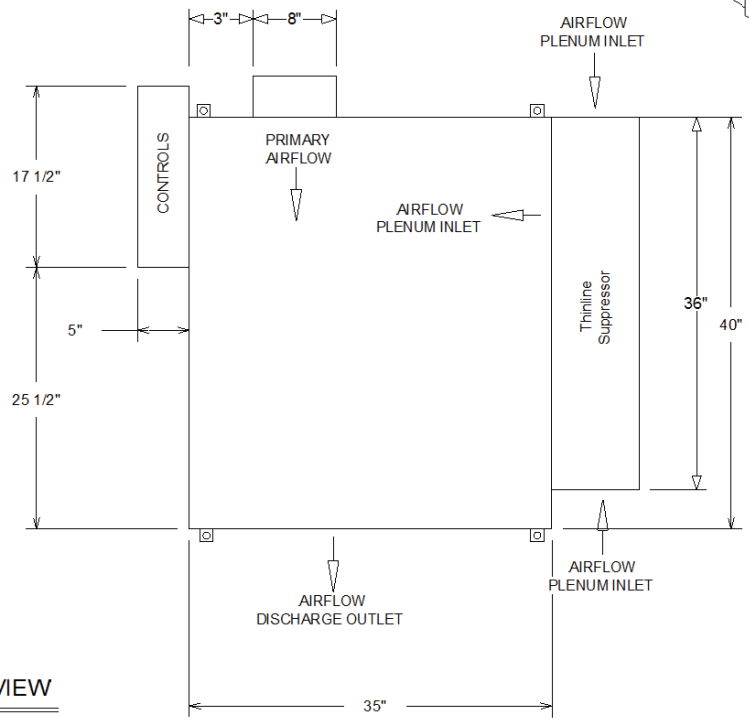

TOP VIEW

NOTES:

1. Allow a minimum 6" plenum inlet clearance for un-ducted installations.
2. Flanged discharge outlet accepts up to a 1" duct flange.
3. Filter is secured in filter frame located in unit inlet.
4. Bottom access panel standard.
5. Air valve centered between top & bottom panel.
6. See Installation Documents for exact hanger bracket locations.
7. Heating coil un-insulated. External insulation may be field supplied and installed as required.
8. All high & low voltage controls have same-side NEC jumpback clearance.
9. Allow 48" of straight duct downstream of unit before first runout and inside of the duct should be equal discharge size.
10. Terminal box access door is side hinged. Allow for clearance.
11. Hanger Bracket flange on unit adds 2" to width and length of unit.

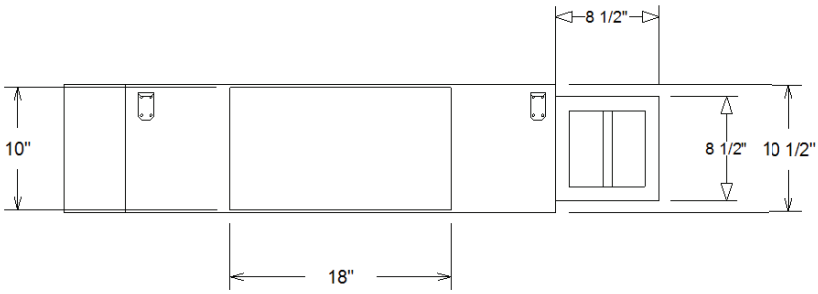

DISCHARGE VIEW

Approximate Dry Weight	103.0 lb

Weights reflected may vary ±5.0 lb based upon options selected.

Figure 32. Low-height series — hot water (LSWF) with thinline suppressor — fan sizes DS02

Unit Model	LSWF
Nominal Valve Size & Depth	8" Dia. x 4" Depth
Nominal Fan Size	DS02 Fan
Filter Size	7" x 7" x 1"

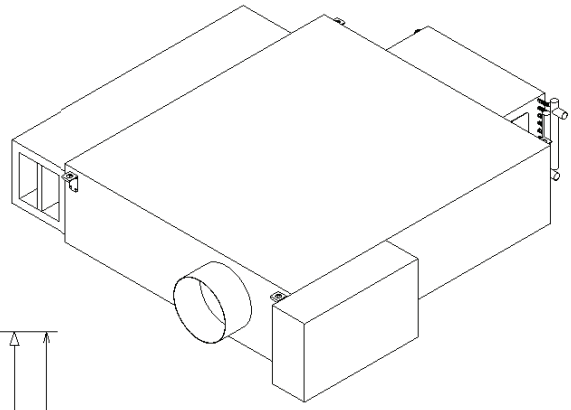

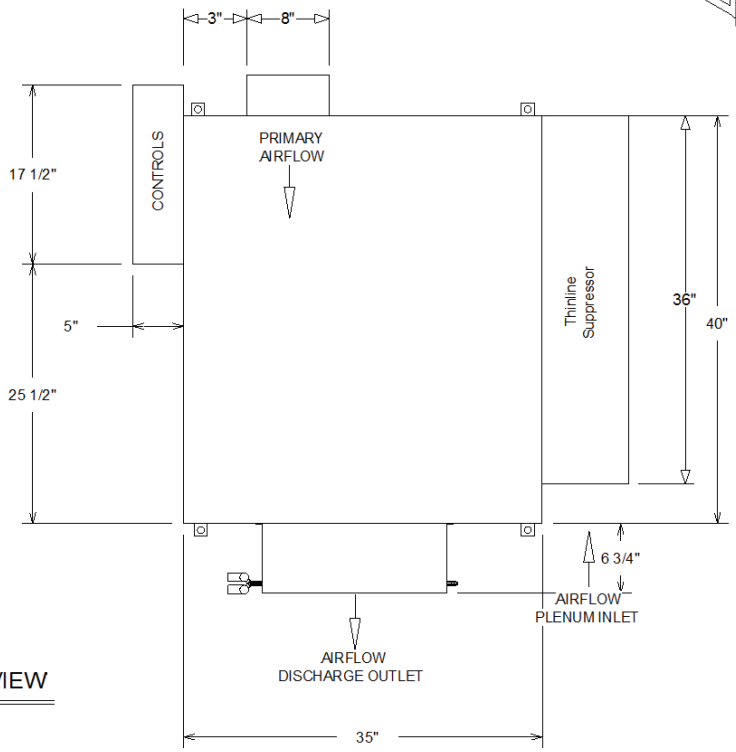

TOP VIEW

NOTES:

1. Allow a minimum 6" plenum inlet clearance for un-ducted installations.
2. Flanged discharge outlet accepts up to a 1" duct flange.
3. Filter is secured in filter frame located in unit inlet.
4. Bottom access panel standard.
5. Air valve centered between top & bottom panel.
6. See Installation Documents for exact hanger bracket locations.
7. Heating coil un-insulated. External insulation may be field supplied and installed as required.
8. All high & low voltage controls have same-side NEC jumpback clearance.
9. Allow 48" of straight duct downstream of unit before first runout and inside of the duct should be equal discharge size.
10. Terminal box access door is side hinged. Allow for clearance.
11. Hanger Bracket flange on unit adds 2" to width and length of unit.

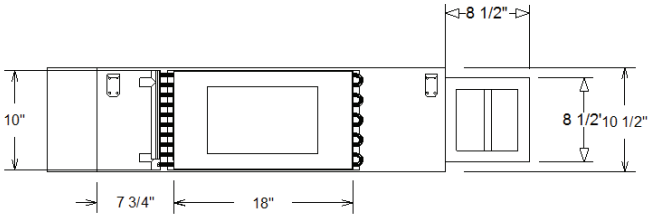

DISCHARGE VIEW

Approximate Dry Weight	111.0 lb

Weights reflected may vary ±5.0 lb based upon options selected.

Figure 33. Low-height series — electric (LSEF) with thinline suppressor — fan sizes DS02

Unit Model	LSEF
Nominal Valve Size & Depth	8" Dia. x 4" Depth
Nominal Fan Size	DS02 Fan
Filter Size	7" x 7" x 1"

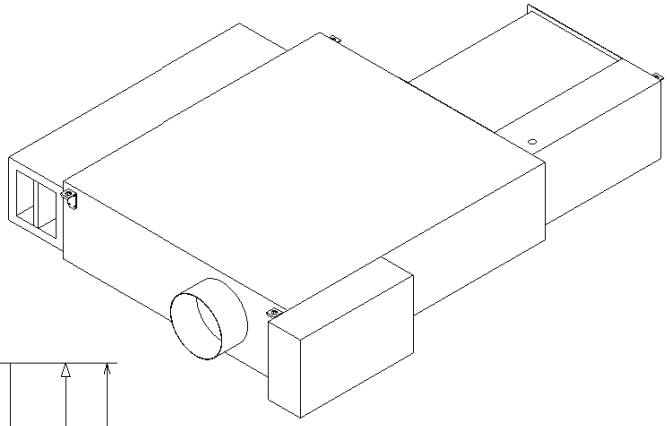

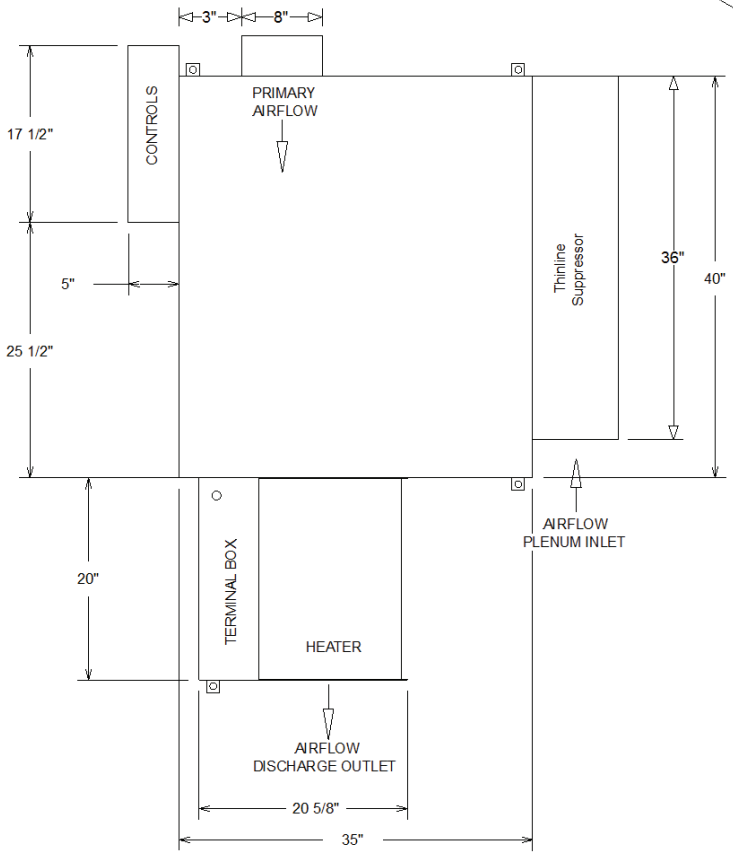

NOTES:

1. Allow a minimum 6" plenum inlet clearance for un-ducted installations.
2. Flanged discharge outlet accepts up to a 1" duct flange.
3. Filter is secured in filter frame located in unit inlet.
4. Bottom access panel standard.
5. Air valve centered between top & bottom panel.
6. See Installation Documents for exact hanger bracket locations.
7. Heating coil un-insulated. External insulation may be field supplied and installed as required.
8. All high & low voltage controls have same-side NEC jumpback clearance.
9. Allow 48" of straight duct downstream of unit before first runout and inside of the duct should be equal discharge size.
10. Terminal box access door is side hinged. Allow for clearance.
11. Hanger Bracket flange on unit adds 2" to width and length of unit.

TOP VIEW

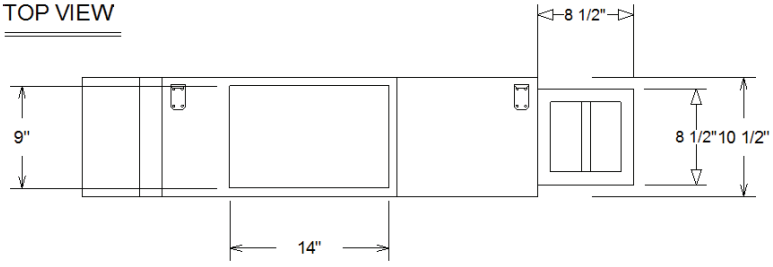

DISCHARGE VIEW

Approximate Dry Weight	121.0 lb

Weights reflected may vary ±5.0 lb based upon options selected.

Figure 34. Low-height series — cooling only (LSCF) with thinline suppressor — fan size DS03

Unit Model	LSCF
Nominal Valve Size & Depth	10" Dia. x 4" Depth
Nominal Fan Size	DS03 Fan
Filter Size	7" x 7" x 1"

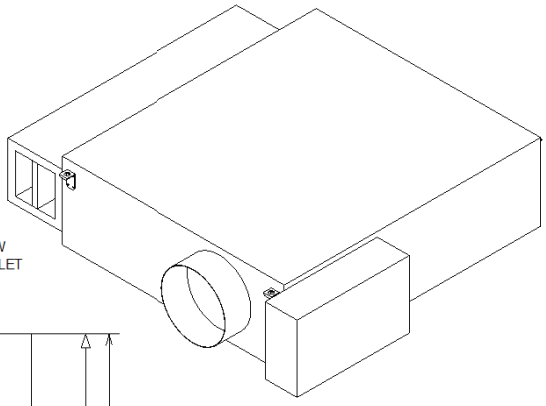

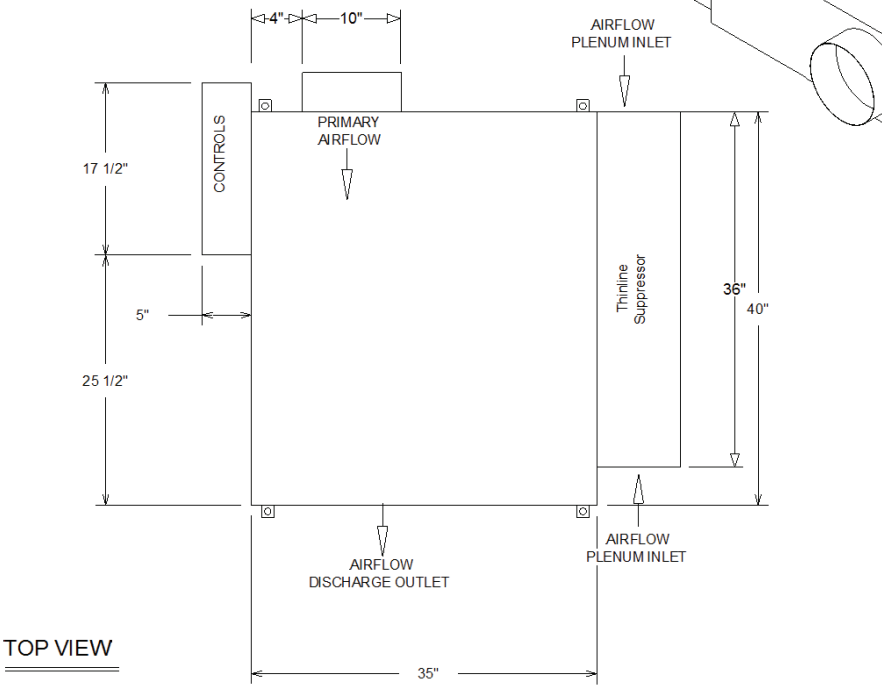

TOP VIEW

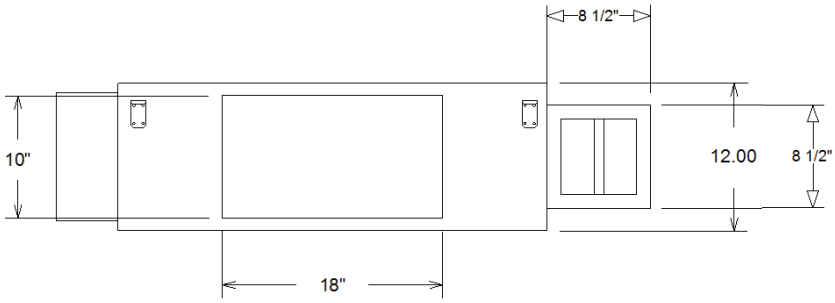

DISCHARGE VIEW

NOTES:

1. Allow a minimum 6" plenum inlet clearance for un-ducted installations.
2. Flanged discharge outlet accepts up to a 1" duct flange.
3. Filter is secured in filter frame located in unit inlet.
4. Bottom access panel standard.
5. Air valve centered between top & bottom panel.
6. See Installation Documents for exact hanger bracket locations.
7. Heating coil un-insulated. External insulation may be field supplied and installed as required.
8. All high & low voltage controls have same-side NEC jumpback clearance.
9. Allow 48" of straight duct downstream of unit before first runout and inside of the duct should be equal discharge size.
10. Terminal box access door is side hinged. Allow for clearance.
11. Hanger Bracket flange on unit adds 2" to width and length of unit.

Approximate Dry Weight	111.0 lb

Weights reflected may vary ±5.0 lb based upon options selected.

Figure 35. Low-height series — hot water (LSWF) with thinline suppressor — fan size DS03

Unit Model	LSWF
Nominal Valve Size & Depth	10" Dia. x 4" Depth
Nominal Fan Size	DS03 Fan
Filter Size	7" x 7" x 1"

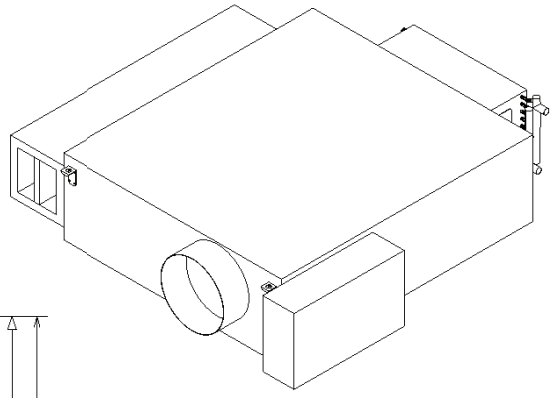

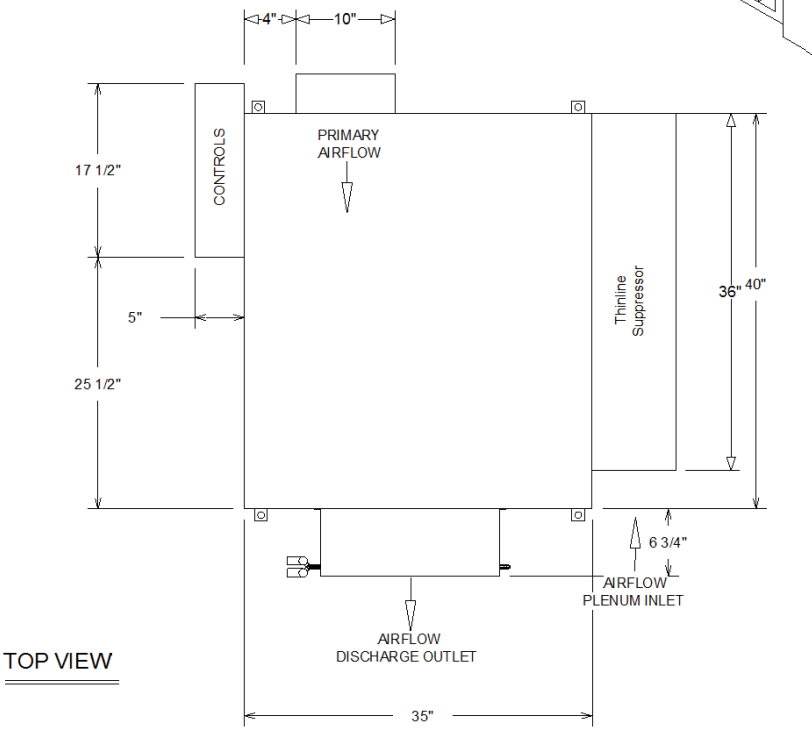

TOP VIEW

NOTES:

1. Allow a minimum 6" plenum inlet clearance for un-ducted installations.
2. Flanged discharge outlet accepts up to a 1" duct flange.
3. Filter is secured in filter frame located in unit inlet.
4. Bottom access panel standard.
5. Air valve centered between top & bottom panel.
6. See Installation Documents for exact hanger bracket locations.
7. Heating coil un-insulated. External insulation may be field supplied and installed as required.
8. All high & low voltage controls have same-side NEC jumpback clearance.
9. Allow 48" of straight duct downstream of unit before first runout and inside of the duct should be equal discharge size.
10. Terminal box access door is side hinged. Allow for clearance.
11. Hanger Bracket flange on unit adds 2" to width and length of unit.

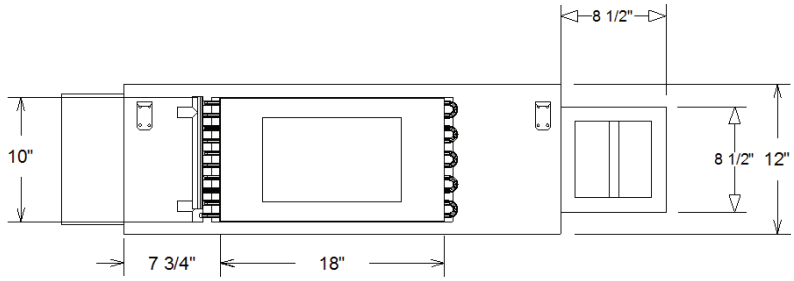

DISCHARGE VIEW

Approximate Dry Weight	117.0 lb

Weights reflected may vary ±5.0 lb based upon options selected.

Figure 36. Low-height series — electric (LSEF) with thinline suppressor — fan size DS03

Unit Model	LSEF
Nominal Valve Size & Depth	8" Dia. x 4" Depth
Nominal Fan Size	DS02 Fan
Filter Size	7" x 7" x 1"

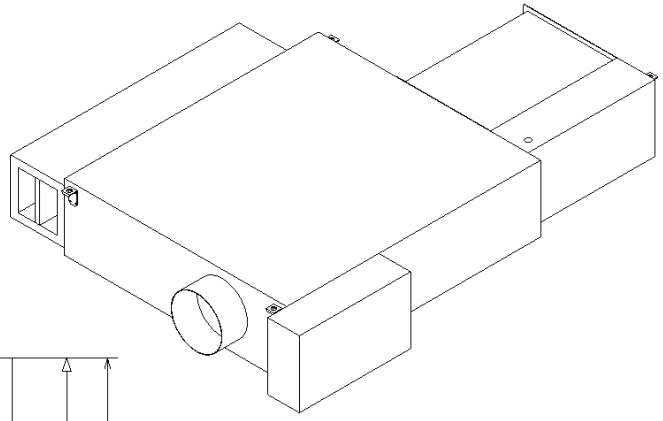

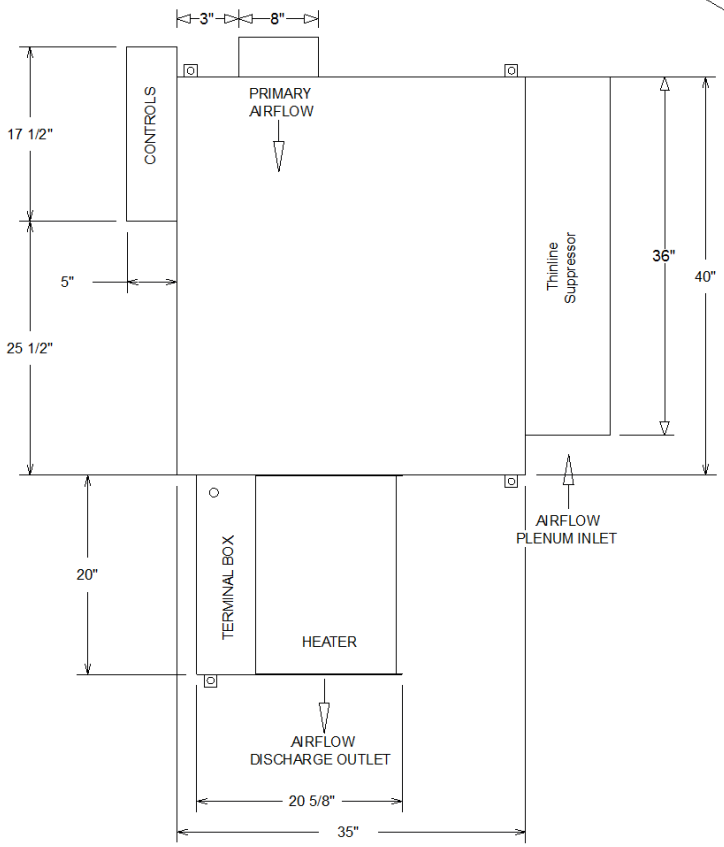

NOTES:

1. Allow a minimum 6" plenum inlet clearance for un-ducted installations.
2. Flanged discharge outlet accepts up to a 1" duct flange.
3. Filter is secured in filter frame located in unit inlet.
4. Bottom access panel standard.
5. Air valve centered between top & bottom panel.
6. See Installation Documents for exact hanger bracket locations.
7. Heating coil un-insulated. External insulation may be field supplied and installed as required.
8. All high & low voltage controls have same-side NEC jumpback clearance.
9. Allow 48" of straight duct downstream of unit before first runout and inside of the duct should be equal discharge size.
10. Terminal box access door is side hinged. Allow for clearance.
11. Hanger Bracket flange on unit adds 2" to width and length of unit.

TOP VIEW

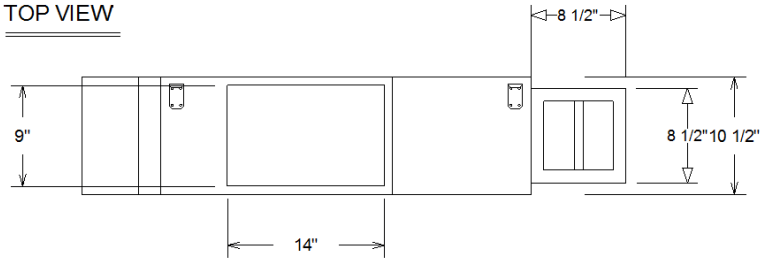

DISCHARGE VIEW

Approximate Dry Weight	121.0 lb

Weights reflected may vary ±5.0 lb based upon options selected.

ALH000253

Figure 37. Low-height series coil assembly (1 row)

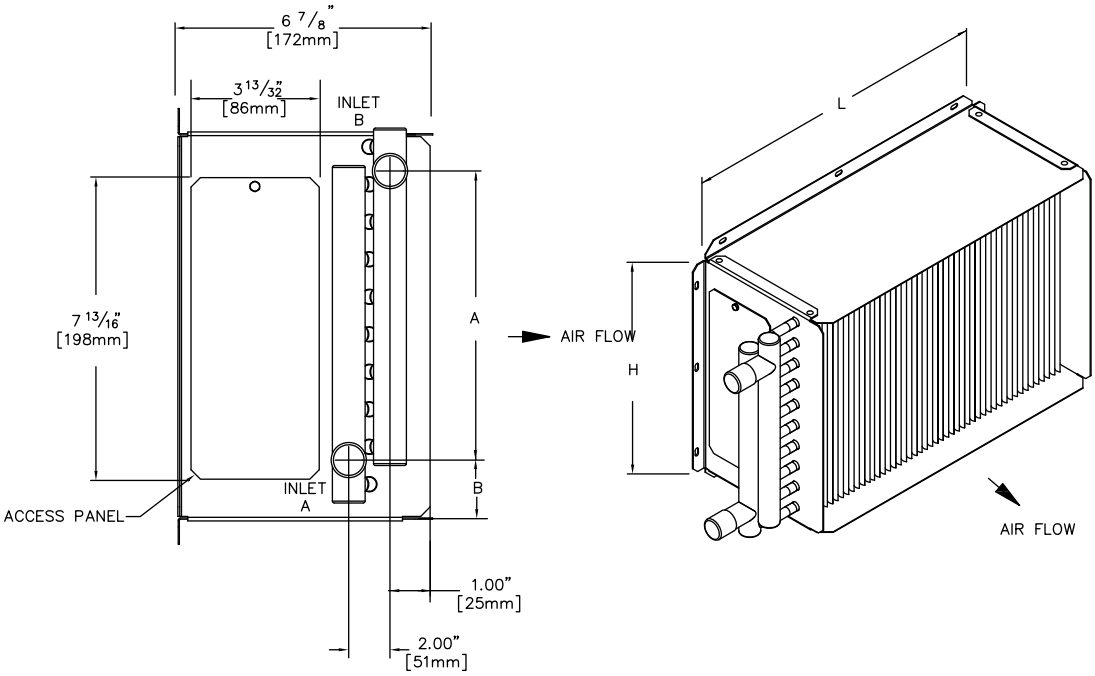

Fan Size	Coil Connection (O. D.) in (mm)	A in (mm)	B in (mm)	L in (mm)	H in (mm)	Internal Volume gal (in³)	Operating Weight lb (kg)
DS02/ DS03	0.875 (22)	7.75 (197)	1.50 (38)	18.00 (457)	10.00 (254)	0.07 (17.02)	10.4 (4.7)

Notes:

1. *Location of coil connections is determined by facing air stream. L.H. Coil connections shown, R.H. opposite.*
2. *Coil furnished with stub sweat connections.*
3. *Coil is rotated to achieve opposite hand connection. Water inlet is always on the bottom and outlet on the top.*
4. *Access Panel is standard.*

Figure 38. Low-height series coil assembly (2 row)

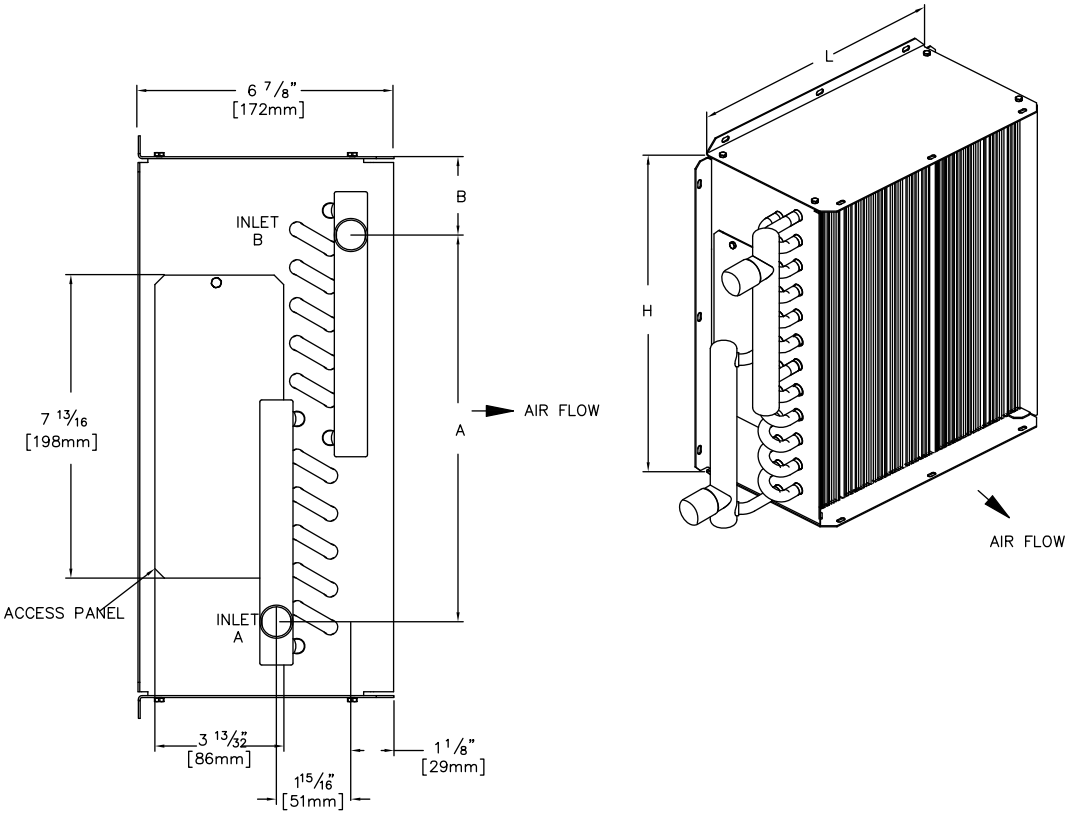

Fan Size	Coil Connection (O. D.) in (mm)	A in (mm)	B in (mm)	L in (mm)	H in (mm)	Internal Volume gal (in³)	Operating Weight lb (kg)
DS02/ DS03	0.875 (22)	6.25 (159)	1.50 (38)	18.00 (457)	10.00 (254)	0.10 (23.88)	7.8 (3.5)

Notes:

1. *Location of coil connections is determined by facing air stream. L.H. Coil connections shown, R.H. opposite.*
2. *Coil furnished with stub sweat connections.*
3. *Use port at bottom for inlet and port at top for outlet. For 2–row coils, always plumb in counter flow orientation: Left hand unit's water inlet on bottom, and outlet on the top. Right hand unit's water inlet on top and outlet on the bottom.*
4. *Access Panel is standard.*

Mechanical Specifications: Fan-Powered

Casing

22-gage galvanized steel. Hanger brackets, bottom access, and plenum filter are provided as standard.

Agency Listing

Unit is UL and Canadian UL Listed as a room air terminal unit. Control # 9N65. AHRI 880 Certified.

UL-Listed Products

All VariTrane™ units are listed in accordance with UL as terminal units. This listing includes the terminal with electric heaters. Additionally, all insulation materials pass UL 25/50 smoke and flame safety standards.

AHRI Certified Performance

All VariTrane™ units are AHRI certified. AHRI 880 guarantees the pressure drop, flow performance, and acoustical performance provided is reliable and has been tested in accordance with industry accepted standards. AHRI 885 uses AHRI 880 performance and applies accepted industry methods to estimate expected “NC” sound levels within the occupied space.

Insulation

1-inch (25.4 mm) Matte-faced Insulation – Interior surface of unit casing is acoustically and thermally lined with 1-inch, 1.8 lb/ft^3 (25.4 mm, 16.0 kg/m^3) composite density glass fiber with a high-density facing. Insulation R-Value is 4.2. Insulation is UL listed and meets NFPA-90A and UL 181 standards. There are no exposed edges of insulation (complete metal encapsulation).

1-inch (25.4 mm) Foil-faced Insulation – Interior surface of unit casing is acoustically and thermally lined with 1-inch, 1.8 lb/ft^3 (25.4 mm, 16.0 kg/m^3) density glass fiber with foil facing. Insulation R-Value is 4.2. Insulation is UL listed and meets NFPA-90A and UL 181 standards and bacteriological standard ASTM C 665. There are no exposed edges of insulation (complete metal encapsulation).

1-inch (25.4 mm) Double-wall Insulation – Interior surface of unit casing is acoustically and thermally lined with a 1-inch, 1.8 lb./ft^3 (25.4 mm, 16.0 kg/m^3) composite density glass fiber with high-density facing. Insulation R-value is 4.2. Insulation is UL listed and meets NFPA-90A and UL 181 standards. Insulation is covered by interior liner made of 26-gage galvanized steel. All wire penetrations are covered by grommets. There are no exposed edges of insulation (complete metal encapsulation).

3/8-inch (9.5 mm) Closed-cell Insulation – Interior surface of the unit casing is acoustically and thermally lined with 3/8-inch, 4.4 lb/ft^3 (9.5 mm, 70.0 kg/m^3) closed-cell insulation. Insulation is UL listed and meets NFPA-90A and UL 181 standards. Insulation has an R-Value of 1.4. There are no exposed edges of insulation (complete metal encapsulation).

Primary Air Valve

Air Valve Round – The primary (ventilation) air inlet connection is an 18-gauge galvanized steel cylinder sized to fit standard round duct. A multiple-point, averaging flow sensing ring is provided with balancing taps for measuring +/-5% of unit cataloged airflow. An airflow-versus-pressure differential calibration chart is provided. The damper blade is constructed of a closed-cell foam seal that is mechanically locked between two 22-gauge galvanized steel disks. The damper blade assembly is connected to a cast zinc shaft supported by self-lubricating bearings. The shaft is cast with a damper position indicator. The valve assembly includes a mechanical stop to prevent over-stroking.

Air Valve Rectangular – Inlet collar is constructed of 18-gauge galvanized steel sized to fit standard rectangular duct. An integral multiple-point, averaging flow-sensing ring provides primary airflow measurement within +/-5% of unit cataloged airflow. Damper is 16-gauge galvanized steel. The damper blade assembly is connected to a cast zinc shaft supported by self-lubricating bearings. The shaft is cast with a damper position indicator. The valve assembly includes a mechanical stop to prevent over-stroking.

Table 46. Fan/inlet combinations

Unit	Inlet (in.)							
	4	5	6	8	10	12	14	16
Small	X	X	X	X	X			
Medium			X	X	X	X	X	
Large			X	X	X	X	X	X

Table 47. Fan/inlet combinations – low height

Inlet (in.)	LSxF	
	DS02	DS03
4	X	
5	X	
6	X	X
8	X	X
10		X
8 x 14	X	X

Fan Motor

PSC

Single-speed, direct-drive, permanent split capacitor type. Thermal overload protection provided. Motors will be designed specifically for use with an open SCR. Motors will accommodate anti-backward rotation at start up. Motor and fan assembly are isolated from terminal unit.

ECM

Electrically commutated motor (ECM) is designed for high-efficient operation with over 70% efficiency throughout the operating range.

Fan Speed Control

Variable Speed Control Switch (SCR)

The SCR speed control device is provided as standard and allows the operator infinite fan speed adjustment.

Transformer

The transformer is factory installed in the fan control box to provide 24 Vac for controls.

Disconnect Switch

A toggle on/off switch is provided as standard and allows the operator to turn the unit on or off by toggling to the appropriate setting. This switch breaks both legs of power to the fan and the electronic controls (if applicable).

Outlet Connection

Flanged connection – Rectangular opening on unit discharge to accept 90° flanged ductwork connection.

Filter

A 1-inch (25 mm) filter is provided on the plenum inlet and attaches to the unit with a filter frame. Additional filtration options include a 1" MERV 8 and 2" MERV13.

Integral Suppressor Attenuator

The Integral suppressor attenuator option is factory assembled and installed on plenum air inlet. The exclusive Trane design provides acoustical attenuation with a compact footprint. Unit sound performance is assured through rigorous testing in accordance with AHRI 880 test procedures.

Suppressor casing is constructed of 22 gauge galvanized steel, and lined with 1-inch glass fiber with high density facing or 1-inch glass density fiber with foil facing. Suppressor insulation liner will be 1-inch glass fiber with high density facing when unit insulation liner is 1/2-inch or 1-inch glass fiber with high density facing. For all other unit insulation liners, the Suppressor insulation liner will be 3/8-inch closed cell foam. The insulation is UL listed and meets NFPA 90A and UL 181 requirements. Foil faced insulation also meets bacteriological standard ASTM C 665.

Thinline Suppressor Attenuator

The Thinine Suppressor sound attenuator option is factory assembled and installed on plenum air inlet which is opposite the controls inlet side. The exclusive Trane design provides acoustical attenuation with a compact footprint. Unit sound performance is assured through rigorous testing in accordance with AHRI 880 test procedures.

Thinline Suppressor casing is constructed of 22-gauge galvanized steel, and lined with 1-inch glass fiber with high density facing or 1-inch glass density fiber with foil facing. Suppressor insulation liner will be 1-inch glass fiber with high density facing when unit insulation liner is 1/2-inch or 1-inch glass fiber with high density facing. For all other unit insulation liners, the Suppressor insulation liner will be 3/8-inch closed cell foam. The insulation is UL listed and meets NFPA 90A and UL 181 requirements. Foil faced insulation also meets bacteriological standard ASTM C 665.

Hot Water Coil

Factory installed on the fan discharge. All hot water coils have 144 aluminum-plated fins per foot (0.305 m). Full fin collars provided for accurate fin spacing and maximum fin-tube contact. The 3/8-inch (9.5 mm) OD seamless copper tubes are mechanically expanded into the fin collars. Coils are proof tested at 450 psig (3102 kPa) and leak tested at 300 psig (2068 kPa) air pressure under water. Coil connections are brazed. Standard top and bottom gasketed access panels are attached with screws.

Electric Heat Coil

The electric heater is a factory-provided and installed, UL recognized resistance open-type heater. It also contains a disc-type automatic pilot duty thermal primary cutout, and manual reset load carrying thermal secondary device. Heater element material is nickel-chromium. The heater terminal box is provided with 7/8-inch (22 mm) knockouts for customer power supply. Terminal connections are plated steel with ceramic insulators. All fan-powered units with electric reheat are single-point power connections.

Electric Heat Options

Silicon-Controlled Rectifier (SCR) – Optional 0 to 10 Vdc electric heat control that provides modulation.

Solid State Relay (SSR) – Optional electric 24 Vac solid-state contactor(s) for use with direct digital controls.

Magnetic Contactor – Optional electric heater 24V contactor(s) for use with direct digital controls.

Airflow Switch – Standard air pressure device designed to disable heater when terminal fan is off.

Power Fuse – If a power fuse is chosen with a unit containing electric heat, then a safety fuse is located in the electric heater's line of power to prevent power surge damage to the electric heater. Any electric heat unit with a calculated MCA greater than or equal to 30 will have a fuse provided.

Disconnect Switch – A standard factory-provided door interlocking disconnect switch on the electric heater control panel disengages primary voltage to the terminal.

Direct Digital Controls

DDC Actuator – Trane 3-wire, 24-Vac, floating-point quarter turn control actuator with linkage release button. Actuator has a constant drive rate independent of load, a rated torque of 35 in-lb, a 90-second drive time, and is non-spring return. Travel is terminated by end stops at fully-opened and -closed positions. An integral magnetic clutch eliminates motor stall.

DDC Actuator (Belimo) – LMB24-3-T TN 3-wire, 24 Vac/dc, floating-point, quarter turn actuator with linkage release button. Actuator has constant drive rate independent of load, rated torque 45 in-lb, 95 sec drive time, and non-spring return. Travel is terminated by end stops at fully-opened and -closed positions. Internal electronic control prevents motor stall when motor reaches end stops.

Direct Digital Controller – Microprocessor-based terminal unit controllers provide accurate, pressure-independent control through the use of proportional integral control algorithm and direct digital control technology.

Controllers monitor zone temperature setpoints, zone temperature, zone temperature rate of change, and valve airflow. They can also monitor supply duct air temperature, CO_2 concentration and discharge air temperature via appropriate sensors. Controller is provided in an enclosure with 7/8-inch (22mm) knockouts for remote control wiring. A Trane zone sensor or Air-Fi® Interface Module paired with a Wireless Communications Sensor (WCS) is required.

DDC Zone Sensor – The controller senses zone temperature through a sensing element located in the zone sensor. In addition to the sensing element, zone sensor options may include an externally-adjustable setpoint, communications jack for use with a portable edit device, and an override button to change the individual controller from unoccupied to occupied mode. The override button has a cancel feature that will return the system to unoccupied. Wired zone sensors utilize a thermistor to vary the voltage output in response to changes in the zone temperature. Wiring to the controller must be 18- to 22-awg. twisted pair wiring. The setpoint adjustment range is 50 to 88°F (10 to 31°C). Depending upon the features available in the model of sensor selected, the zone sensor may require from a 2-wire to a 5-wire connection. Wireless zone sensors report the same zone information as wired zone sensors, but do so using radio transmitter technology and does not require interconnecting wiring from the zone sensor to the unit controller.

Digital Display Zone Sensor with Liquid Crystal Display (LCD) – A Liquid Crystal Display (LCD) displays setpoint or zone temperature. Sensor buttons allow user to adjust setpoints, and allow zone temperature readings to be turned on or off. Digital display zone sensor also includes a communication jack for use with a portable edit device, and an override button to change from unoccupied to occupied. Override button cancel feature returns system to unoccupied mode.

Unit Options

Power Fuse

Optional power fuse is factory installed.

Hot Water Valves

Trane Water Valve

The valve is a field-convertible, two-way or three-way configuration and ships in two-way configuration with a plug in the B port. The intended fluid is water or water and glycol mix (50% maximum glycol). The actuator is a synchronous motor drive. The valve is driven to a predetermined position by the controller using a proportional plus integral control algorithm. If power is removed, the valve stays in its last position. The actuator is rated for plenum applications under UL 2043 and UL 873 standards.

- Pressure and temperature ratings: The valve is designed and tested in full compliance with ANSI B16.15 Class 250 pressure/temperature ratings, ANSI B16.104 Class IV control shutoff leakage, and ISA S75.11 flow characteristic standards.
- Flow capacity: 0.70 Cv, 1.7 Cv, 2.7 Cv, 5.0 Cv

- Overall diameter: 1/2-inch NPT
- Maximum allowable pressure: 300 psi (2068 kPa)
- Maximum operating fluid temperature: 201ºF (94°C)
- Maximum close-off pressure: 60 psi (0.4 MPa)
- Electrical rating: 3VA at 24 Vac
- 8-inch plenum rated cable with AMP Mate-N-Lok connector

Belimo Water Valve

The intended fluid is water or water and glycol (50% maximum glycol). The actuator is a synchronous motor drive. The valve is driven to a predetermined position by the controller using a proportional plus integral control algorithm. If power is removed, the valve stays in its last position. The actuator is rated for plenum applications under UL 2043 and UL 873 standards.

- Pressure and temperature ratings: The valve is designed and tested in full compliance with ANSI B16.15 Class 250 pressure/temperature ratings, ANSI B16.104 Class IV control shutoff leakage, and ISA S75.11 flow characteristic standards.
- Flow capacity: 0.3 Cv, 0.46 Cv, 0.8 Cv, 1.2 Cv, 1.9 Cv, 3.0 Cv, 4.7 Cv
- Overall diameter: 1/2-inch NPT
- Maximum allowable pressure: 600 psi (4137 kPa)
- Maximum operating fluid temperature: 201ºF (94°C)
- Maximum close-off pressure: 200 psi (1379 kPa)
- Electrical rating: 1VA at 24 Vac
- 8-inch plenum rated cable with AMP Mate-N-Lok connector.

The AHRI Certified mark indicates Trane U.S. Inc. participation in the AHRI Certification program. For verification of individual certified products, go to ahridirectory.org.

Trane - by Trane Technologies (NYSE: TT), a global innovator - creates comfortable, energy efficient indoor environments for commercial and residential applications. For more information, please visit trane.com or tranetechnologies.com.

Trane has a policy of continuous product and product data improvements and reserves the right to change design and specifications without notice. We are committed to using environmentally conscious print practices.

VAV-PRC017C-EN 18 Apr 2025
Supersedes VAV-PRC017B-EN (December 2024)

©2025 Trane