Product Catalog

Precedent™ Packaged Rooftop Units

Standard and High Efficiency Heat Pumps
3 to 25 Tons — 60 Hz

July 2026

PKGP-PRC023F-EN

Introduction

Packaged Rooftop Precedent Units

Precedent™ rooftop units have been redesigned to deliver the most complete offering of 3 to 25 ton gas, hybrid, and all-electric light commercial packaged rooftop solutions. The wide range of capacities, efficiencies, heating types, and available options allow Precedent rooftop systems to serve a variety of commercial applications. Plus, new features including the intuitive Symbio™ unit controller, hinged control panel access, color-coded wiring, and direct drive motors simplify installation, start-up, and maintenance.

Copyright

This document and the information in it are the property of Trane, and may not be used or reproduced in whole or in part without written permission. Trane reserves the right to revise this publication at any time, and to make changes to its content without obligation to notify any person of such revision or change.

Trademarks

All trademarks referenced in this document are the trademarks of their respective owners.

Revision History

- Added SCR Modulating Electric Heat and Hot Water Coil Control to Features and Benefits.
- Updates to the Accessories table.
- Updates to the Model Number Description chapter.
- Updates tables in the Heating Performance and Electrical Data chapters.
- Added Silicon Recitifier Controlled (SCR) Device and Supply-Duct Mounted Temperature Sensor sections to Mechanical Specifications chapter.

Table of Contents

Features and Benefits . . . 6
- Features . . . 6
- Control Options . . . 8
- Accessories . . . 8
- Key Benefits . . . 12

Application Considerations . . . 20
- A2L Application Considerations . . . 20
- Leak Detection System (Refrigerant charge greater than 3.91 lb per circuit) . . . 21
- Optional Ultra-Low NOx Gas Furnace . . . 21
- Auxiliary Gas Heating Operation . . . 21
- Optional Stainless Steel Heat Exchanger . . . 21

Model Number Description . . . 22

General Data . . . 24

Gross Cooling Capacities . . . 41

Heating Capacities . . . 86

Reheat Temperature Rise . . . 96

Evaporator Fan Performance — Heat Pump . . . 120
- Fan Curve Limits . . . 120
- 3 to 5 Tons . . . 121
- 6 to 25 Tons — Downflow . . . 130
- 6 to 25 Tons — Horizontal . . . 140

Evaporator Fan Performance — Dual Fuel . . . 151
- 3 to 5 Tons . . . 151
- 6 to 25 Tons — Downflow . . . 157
- 6 to 25 Tons — Horizontal . . . 164

Fan Performance . . . 171

Heating Performance . . . 176

Controls 183
Enhanced BAS Integration and Connectivity 183
Secure Remote Connectivity with Trane Connect. 183
Serviceability 183
Flexibility 185
Economizer Controls 185
Zone Sensors 186
Air-Fi Wireless Communicating Zone Sensors 187
Thermostats 188
Humidity Control (HGRH) 188
Electrical Data 190
Dimensional Data 208
Weights 225

Mechanical Specifications 228
General 228
Casing 228
Coils 228
Coil Guards 228
Compressors 228
Filters 229
Frostat 229
Gas Heating Section 229
Indoor Fan 229
Powered or Unpowered Convenience Outlet 229
Stainless Steel Drain Pan 229
Stainless Steel Heat Exchanger 229
Through-the-Base Electrical with Circuit Breaker 229
Through-the-Base Electrical with Disconnect Switch 230
Through-the-Base Gas Piping 230
Standard Economizer 230
Manual Outside Air Damper 230
Motorized Outside Air Damper 230
Power Exhaust 230
Roof Curb 230
Ventilation Override Operation 230
Leak Detection Sensors 231
Supply-Duct Mounted Temperature Sensor 231
Silicon Recitifier Controlled (SCR) Device 231

Features and Benefits

Features

Table 1. Cabinet size – heat pump

<table>
<tr><th rowspan="2">Unit Size (Tons)</th><th rowspan="2">Model Number Digits 4, 5, 6</th><th colspan="4">Model</th></tr>
<tr><th>WSK</th><th>DSK</th><th>WHK</th><th>DHK</th></tr>
<tr><td>3</td><td>036</td><td colspan="2" rowspan="3">A.0</td><td colspan="2" rowspan="6">B.0</td></tr>
<tr><td>4</td><td>048</td></tr>
<tr><td>5</td><td>060</td></tr>
<tr><td>6</td><td>072</td><td colspan="2" rowspan="3">B.0</td></tr>
<tr><td>7.5</td><td>090</td></tr>
<tr><td>8.5</td><td>102</td></tr>
<tr><td>10</td><td>120</td><td>B.0[a]</td><td colspan="3">C.0</td></tr>
<tr><td>12.5</td><td>150</td><td colspan="2" rowspan="3">D.0</td><td colspan="2" rowspan="3">D.0</td></tr>
<tr><td>15</td><td>180</td></tr>
<tr><td>17.5</td><td>210</td></tr>
<tr><td>20</td><td>240</td><td colspan="2">D.1</td><td colspan="2">D.1</td></tr>
<tr><td>25</td><td>300</td><td colspan="2">D.1</td><td>D.1</td><td>—</td></tr>
</table>

Note: Equipment feature availability is dependent on unit configuration. For more information, see Trane® Select Assist™, or contact product support.

[a] Cabinet size change was made in 2025. Use model number digit 7 to verify cabinet size: WSK120A is C.0 cabinet, WSK120B is B.0 cabinet.

Note: *Equipment feature availability is dependent on unit configuration. For more information, see Trane® Select Assist™, or contact product support.*

Table 2. Features – standard and optional

	Standard Features	Options		
		Factory Installed	Factory or Field Installed	Field Installed
3-year Limited Parts Warranty	X	—	—	—
5-year Limited Compressor Warranty	X	—	—	—
10-year Limited Heat Exchanger Warranty	—	X	—	—
15-year Limited Warranty Stainless Steel Heat Exchanger	—	X	—	—
2 inch Filter	X		—	—
2 inch MERV 8 Filters	—	X	—	—
2 inch MERV 13 Filters	—	X	—	—
Access Doors - Hinged	—	X	—	—
Access Door - Hinged (Control Box)	X	—	—	—
Access Panels	X	—	—	—
Anti-Short Cycle Timer	X	—	—	—
Barometric Relief	—	—	X	—
CO_2 Sensor	—	—	—	X
Clogged Filter Switch	—	—	X	—
Coil guards	X	—	—	—
CompleteCoat™ Condenser Coil	—	X	—	—
Condensate Overflow Switch	—	—	X	—
Convertible Airflow	X	—	—	—
Colored and Numbered Wiring	X	—	—	—
Crankcase Heaters	X	—	—	—

Table 2. Features – standard and optional (continued)

	Standard Features	Options		
		Factory Installed	Factory or Field Installed	Field Installed
Direct Drive Forward Curve Fan	X	—	—	—
Direct Drive Plenum Fan	X	—	—	—
Discharge Air Temperature Sensing Kit — MZVAV, SZVAV, Economizer, HGRH, Modulating Gas Heat	X	—	—	—
Discharge Air Temperature Sensing Kit — Standard (Multispeed)	—	—	X	—
Economizer: Low Leak — Downflow	—	—	X	—
Economizer: Low Leak — Horizontal	—	—	—	X
Economizer: Standard — Convertible (3 to 10 Tons)	—	—	X	
Economizer: Standard — Downflow	—	—	X	
Economizer: Standard — Horizontal	—	—	—	X
Electric Heater	—	—	X	
Expansion Modules	—	—	X[a]	—
Fault Detection and Diagnostics (FDD)	X	—	—	—
Foil-Faced and Edge Protected Insulation	X	—	—	—
Frostat™	X	—	—	—
High Pressure Control	X	—	—	—
High Altitude Kit	—	—	—	X
High Static/Oversized Motor	—	X	—	—
High Temperature Sensor	—	—	—	X
IAQ Dual Sloped Composite Drain Pan	X	—	—	—
Liquid Line Refrigerant Drier	X	—	—	—
Low Ambient Cooling to 0°F	—	—	—	X
Low Ambient Cooling to 40°F	X	—	—	—
Low Pressure Control	X	—	—	—
LP Conversion Kit	—	—	—	X
Manual Outside Air Damper	—	—	X	—
Modulating Gas Heat	—	X	—	—
Humidity Control- Modulating Hot Gas Reheat (HGRH)	—	X	—	—
Hot Water Coil Control (Hydronic Heat)	—	X	—	—
Motorized Outside Air Damper	—	—	X	—
Direct Drive Fan Motors	X	—	—	—
Operating Charge of R-454B	X	—	—	—
Phase Balance/Loss/Reversal Protection	X	—	—	—
Phase Monitor	X	—	—	—
Power Exhaust	—	—	—	X
Powered or Unpowered Convenience Outlet	—	X	—	—
Quick Adapt Curbs	—	—	—	X
Reference or Comparative Enthalpy	—	—	X	—
Roof Curb	—	—	—	X
SCR Modulating Electric Heat	—	—	X	—
Single Point Power	X	—	—	—
Single Side Service	X	—	—	—
Smoke Detector - Return	—	X	—	—
Smoke Detector - Supply	—	X	—	—
Stainless Steel Drain Pan	—	X	—	—
Symbio Controls	X	—	—	—

Table 2. Features – standard and optional (continued)

	Standard Features	Options		
		Factory Installed	Factory or Field Installed	Field Installed
Thermal Expansion Valve	X	—	—	—
Through-the-Base Condensate	X	—	—	—
Through-the-Base Electrical Access	—	X	—	—
Through-the-Base Electrical with Circuit Breaker	—	X	—	—
Through-the-Base Electrical with Disconnect Switch	—	X	—	—
Through-the-Base Gas Piping	—	X	—	—
Tubular Gas Heat Exchanger	—	X	—	—
Ultra-Low NOx Gas Furnace	—	X	—	—
Variable Air Flow (SZVAV)/Variable Air Flow (MZVAV)	—	X	—	—
Ventilation Override	—	—	—	X

[a] Field-installed only for 3 to 5 ton standard efficiency units.

Control Options

Note: *Control option availability is dependent on unit configuration. For more information, see Trane® Select Assist™ or contact product support.*

Table 3. Control options — standard and optional

	Standard Features	Options		
		Factory Installed	Factory or Field Installed	Field Installed
Dual Thermistor Remote Zone Sensor				X
Symbio Service and Installation App	X			
Symbio 700 Advanced Module			X	
Humidity Sensor/Humidistat				X
Thermostat				X
Wireless Zone Sensor				X
Zone Sensor				X
Trane® Air-Fi® Wireless Communication Interface (WCI)		X		
Hot Water Coil Control		X		

Note: For more information, reference the Controls chapter.

Accessories

Note: *Accessory availability is dependent on unit configuration. Some accessories may require additional accessories/options for full functionality. For more information, see Trane® Select Assist™ or contact product support.*

Table 4. Accessories

FIA Kit	Description
FIABARM001*	Barometric Relief
FIABARM002*	Barometric Relief
FIABARM003*	Barometric Relief
FIACLFS001*	Clogged Filter Switch
FIACLFS002*	Clogged Filter Switch (MERV13)
FIACLFS003*	Clogged Filter Switch
FIACLFS004*	Clogged Filter Switch (MERV13)

Table 4. Accessories (continued)

FIA Kit	Description
FIACLFS005*	Clogged Filter Switch Standard and MERV 8 filter
FIACLFS006*	Clogged Filter Switch MERV 13 filter
FIACURB401*	14-inch Full Perimeter Knockdown Curb
FIACURB402*	14-inch Full Perimeter Knockdown Curb
FIACURB403*	14-inch Full Perimeter Knockdown Curb
FIACURB404*	14-inch Full Perimeter Knockdown Curb
FIACURB801*	18-inch Full Perimeter Knockdown Curb
FIACURB802*	18-inch Full Perimeter Knockdown Curb
FIACURB803*	18-inch Full Perimeter Knockdown Curb
FIACURB804*	18-inch Full Perimeter Knockdown Curb
FIADAST001*	Discharge Air Sensing Tube Kit T/W
FIADAST002*	Discharge Air Sensing Tube Kit Y/D
FIADAST003*	Discharge Air Sensing Tube Kit
FIADAST004*	Discharge Air Sensing Tube Kit
FIADAST005*	Discharge Air Sensing Tube Kit
FIADAST006*	Discharge Air Sensing Tube Kit
FIADAST007*	Discharge Air Sensing Tube Kit
FIADAST008*	Discharge Air Sensing Tube Kit
FIADMPR001*	Manual Damper
FIADMPR002*	Manual Damper
FIADMPR003*	Manual Damper
FIADMPR101*	Motorized Damper
FIADMPR102*	Motorized Damper
FIADMPR103*	Motorized Damper
FIAECON001*	Dry Bulb Economizer
FIAECON002*	Dry Bulb Economizer
FIAECON003*	Dry Bulb Economizer
FIAECON101*	Dry Bulb Downflow Low Leak
FIAECON102*	Dry Bulb Downflow Low Leak
FIAECON103*	Dry Bulb Downflow Low Leak
FIAECON201*	Dry Bulb Horizontal Low Leak
FIAECON202*	Dry Bulb Horizontal Low Leak
FIAECON203*	Dry Bulb Horizontal Low Leak
FIAECON303*	Dry Bulb Horizonal Economizer
FIAEHMA001*	SCR Modulating Electric Heat conversion, 208/240V A CABINET
FIAEHMA002*	SCR Modulating Electric Heat conversion, 460V A CABINET
FIAEHMA003*	SCR Modulating Electric Heat conversion, 575V A CABINET
FIAEHMBC01*	SCR Modulating Electric Heat conversion, 208/240V B/C CABINET
FIAEHMBC02*	SCR Modulating Electric Heat conversion, 460V B/C CABINET
FIAEHMBC03*	SCR Modulating Electric Heat conversion, 575V B/C CABINET
FIAEHMD001*	SCR Modulating Electric Heat conversion, 208/240V D CABINET
FIAEHMD002*	SCR Modulating Electric Heat conversion, 460V D CABINET
FIAEHMD003*	SCR Modulating Electric Heat conversion, 575V D CABINET
FIAEHWA306*	6kW, 208-230V Electric Heater
FIAEHWA312*	12kW, 208-230V Electric Heater
FIAEHWA318*	18kW, 208-230V Electric Heater
FIAEHWA323*	23kW, 208-230V Electric Heater

Table 4. Accessories (continued)

FIA Kit	Description
FIAEHWA406*	6kW, 460V Electric Heater
FIAEHWA412*	12kW, 460V Electric Heater
FIAEHWA418*	18kW, 460V Electric Heater
FIAEHWA423*	236kW, 460V Electric Heater
FIAEHWAW06*	6kW, 575V Electric Heater
FIAEHWAW12*	12kW, 575V Electric Heater
FIAEHWAW18*	18kW, 575V Electric Heater
FIAEHWAW23*	23kW, 575V Electric Heater
FIAEHWB306*	6kW, 208-230V Electric Heater
FIAEHWB309*	9kW, 208-230V Electric Heater
FIAEHWB312*	12kW, 208-230V Electric Heater
FIAEHWB318*	18kW, 208-230V Electric Heater
FIAEHWB323*	23kW, 208-230V Electric Heater
FIAEHWB327*	27kW, 208-230V Electric Heater
FIAEHWB336*	36kW, 208-230V Electric Heater
FIAEHWB354*	54kW, 208-230V Electric Heater
FIAEHWB406*	6kW, 460V Electric Heater
FIAEHWB409*	9kW, 460V Electric Heater
FIAEHWB412*	12kW, 460V Electric Heater
FIAEHWB418*	18kW, 460V Electric Heater
FIAEHWB427*	27kW, 460V Electric Heater
FIAEHWB436*	36kW, 460V Electric Heater
FIAEHWB454*	54kW, 460V Electric Heater
FIAEHWBW06*	6kW, 575V Electric Heater
FIAEHWBW09*	9kW, 575V Electric Heater
FIAEHWBW12*	12kW, 575V Electric Heater
FIAEHWBW18*	18kW, 575V Electric Heater
FIAEHWBW27*	27kW, 575V Electric Heater
FIAEHWBW36*	36kW, 575V Electric Heater
FIAEHWBW54*	54kW, 575V Electric Heater
FIAEHWC318*	18kW, 208-230V Electric Heater
FIAEHWC327*	27kW, 208-230V Electric Heater
FIAEHWC336*	36kW, 208-230V Electric Heater
FIAEHWC354*	54kW, 208-230V Electric Heater
FIAEHWC418*	18kW, 460V Electric Heater
FIAEHWC427*	27kW, 460V Electric Heater
FIAEHWC436*	36kW, 460V Electric Heater
FIAEHWC454*	54kW, 460V Electric Heater
FIAEHWCW18*	18kW, 575V Electric Heater
FIAEHWCW27*	27kW, 575V Electric Heater
FIAEHWCW36*	36kW, 575V Electric Heater
FIAEHWCW54*	54kW, 575V Electric Heater
FIAEHWD318*	18kW, 208-230V Electric Heater
FIAEHWD336*	36kW, 208-230V Electric Heater
FIAEHWD354*	54kW, 208-230V Electric Heater
FIAEHWD372*	72kW, 208-230V Electric Heater
FIAEHWD418*	18kW, 460V Electric Heater

Table 4. Accessories (continued)

FIA Kit	Description
FIAEHWD436*	36kW, 460V Electric Heater
FIAEHWD454*	54kW, 460V Electric Heater
FIAEHWD472*	72kW, 460V Electric Heater
FIAEHWDW18*	18kW, 575V Electric Heater
FIAEHWDW36*	36kW, 575V Electric Heater
FIAEHWDW54*	54kW, 575V Electric Heater
FIAEHWDW72*	72kW, 575V Electric Heater
FIAENTH001*	Reference Enthalpy Economizer Control
FIAENTH002*	Comparative Enthalpy Economizer Control
FIAHALT001*	High Altitude Gas Adjustment Kit - 2-Stage gas
FIAHALT002*	High Altitude Gas Adjustment Kit - 2-Stage gas
FIAHALT003*	High Altitude Gas Adjustment Kit - 2-Stage gas
FIAHZDC001*	Horizontal Conversion Panel
FIALOAM002*	Low Ambient
FIALPKT001*	LP Gas Conversion Kit - 2-Stage gas
FIALPKT002*	LP Gas Conversion Kit - 2-Stage gas
FIALPKT003*	LP Gas Conversion Kit - 2-Stage gas
FIALPKTM01*	LP Gas Conversion Kit - Modulating gas
FIALPKTM02*	LP Gas Conversion Kit - Modulating gas
FIALPKTM03*	LP Gas Conversion Kit - Modulating gas
FIALPKTM04*	LP Gas Conversion Kit - Modulating gas
FIALPKTM05*	LP Gas Conversion Kit - Modulating gas
FIALPKTM06*	LP Gas Conversion Kit - Modulating gas
FIALPKTM07*	LP Gas Conversion Kit - Modulating gas
FIALPKTM08*	LP Gas Conversion Kit - Modulating gas
FIALPKTM09*	LP Gas Conversion Kit - Modulating gas
FIALPKTM10*	LP Gas Conversion Kit - Modulating gas
FIAPWRX301*	Power Exhaust 230V
FIAPWRX302*	Power Exhaust 230V
FIAPWRX303*	Power Exhaust 230V
FIAPWRX401*	Power Exhaust 460V
FIAPWRX402*	Power Exhaust 460V
FIAPWRX403*	Power Exhaust 460V
FIAPWRXW01*	Power Exhaust 575V
FIAPWRXW02*	Power Exhaust 575V
FIAPWRXW03*	Power Exhaust 575V
FIAQACB026*	Adapter Curb, BAYCURB026 to FIACURB403/803
FIAQACB027*	Adapter Curb, BAYCURB027 to FIACURB403/803
FIAQACB042*	Adapter Curb, BAYCURB042 to FIACURB402/802
FIAQACB043*	Adapter Curb, BAYCURB043 to FIACURB403/803
FIAQACB044*	Adapter Curb, BAYCURB044 to FIACURB402/802
FIAQACB045*	Adapter Curb, BAYCURB043 to FIACURB401/801

Key Benefits

Figure 1. Unit overview

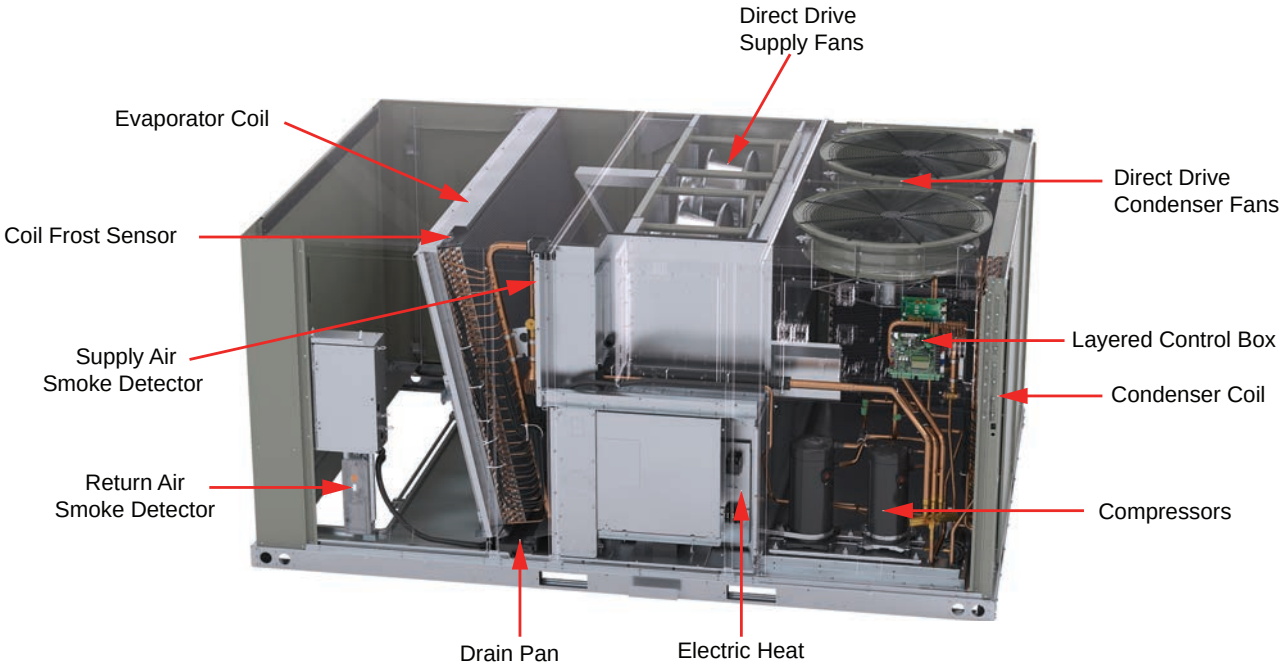

Note: *This graphic is representative. Component availability and location will vary depending on unit configuration.*

Airflow Distribution

When replacing an older unit and ductwork, the Precedent™ unit airflow provides better air distribution, leading to increased comfort in many cases.

Cabinet Integrity

For added water integrity, a raised 1–inch lip around the supply and return of the downflow units is provided to prevent water from entering the ductwork.

Coil Guards

Coil guards protect condenser coil during shipping and from hail, vandals, wind, and other damage. Toolless design lends itself to ease of maintenance in cleaning coils.

Figure 2. Coil guards

CO_2 Sensor — Demand Control Ventilation (DCV)

Demand-controlled ventilation (DCV) is a control strategy that responds to the actual demand (need) for ventilation by regulating the rate the HVAC system brings outdoor air into the building. A carbon dioxide (CO_2) sensor measures the concentration (parts per million, ppm) of CO_2 in the air. As CO_2 concentration changes, the outside air damper modulates to meet the current ventilation needs of the zone. The CO_2 sensor kit is available as a field installed accessory and wires directly to the Symbio™ 700 controller.

CompleteCoat Condenser Coil

This optional coated coil provides excellent corrosion resistance, and uniformity of coverage and coating thickness.

Controls — Symbio

Enhanced BAS Integration and Connectivity

- Open standard communications
  - BACnet® over Zigbee[1] (Air-Fi Wireless)
  - BACnet MS/TP
  - BACnet IP
  - Modbus™ RTU
  - Modbus TCP/IP
- Securely access, troubleshoot, and monitor equipment from anywhere via Trane Connect™

Serviceability

- Wireless mobile app interface (iOS and Android) to simplify start-up/service
- On-board user interface
- Data trending
- Real-time, clear language diagnostics
- Historical alarm logs
- Backup and Restore functionality to reduce commissioning and service time

Flexibility

- Future-ready upgradable software, supporting changing codes and new sequences of operation
- Standard, consistent pre-engineered applications that meet industry standards
- Built-in Schedules (requires Tracer® TU)
- Expandable inputs and outputs (requires Tracer TU)
- Ability to add custom programmed sequences (requires Tracer TU)

Accessibility

Control box consists of a multilevel design with Symbio™ Controls located on hinged panels which provide protection from high voltage components for ease of servicing.

Convenience Outlet

Two convenience outlet options are available:

- GFCI, 120V/15A, 2 plug, powered
- GFCI, 120V/20A, 2 plug, unpowered

This option is available when through-the-base-electrical (with either disconnect switch or circuit breaker) is selected.

1. *ZigBee® is a registered trademark of the ZigBee Alliance.*

Figure 3. Convenience outlet

Convertible Units

Units ship in a downflow configuration and can be converted to horizontal by removing two panels. Optional field accessory kits required for D.0 or D.1 cabinet units (model number digit 39 to 40 = D.0 or D.1).

Note: *Ultra-low NOx units are not compatible with horizontal discharge units.*

Figure 4. Convertible units

Direct Drive Supply Fans

All A.0 cabinet units are equipped with direct drive fan design featuring:

- Direct drive indoor motor with 5-speed taps for 3 to 5 ton standard efficiency units

All B.0, C.0, D.0 and D.1 cabinet units are equipped with a direct drive supply fan design featuring:

- External rotor direct drive variable speed indoor motor
- Variable speed adjustment available in Symbio™ controller
- Designed to slide out for ease of maintenance

Figure 5. Direct drive supply fans

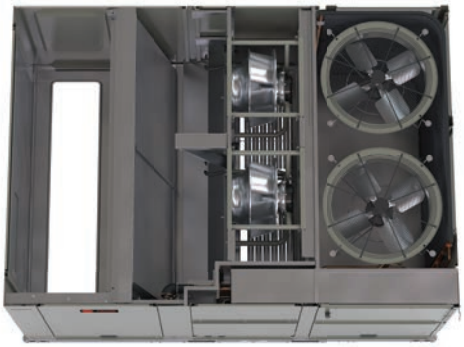

Drain Pan

Every unit includes an easy-to-clean, composite, removable, dual-sloped drain pan (IAQ). On units with A.0, B.0 or C.0 size cabinets, the drain pan configuration is modifiable, allowing installation of the drain trap on either side of the unit or through the base.

Figure 6. Drain pan

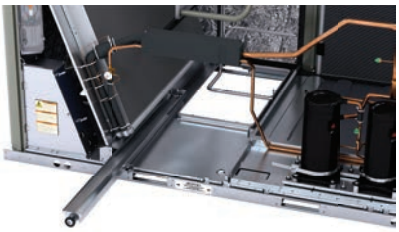

Dual Fuel Operation

For dual fuel models, heat pump with gas auxiliary heat (digit 1 = D). If the call for heat is not satisfied, the final heat pump stage is activated. If ambient temperature is below the adjustable lockout set point, the controller will activate auxiliary gas heat 1st stage, and heat pump operation will be terminated. A continued call for heat will cause the controller to activate auxiliary gas heat 2nd stage. The indoor fan will continue to run and will increase to 100% during transition from heat pump to gas heat.

If continuous fan operation is available and selected from the thermostat, the controller automatically adjusts fan speed for heat pump and gas heat operation. During defrost mode, the controller will activate auxiliary gas heat to maintain comfort.

Fault Detection and Diagnostics (FDD)

The FDD system meets the mandatory requirement of CA Title 24 of fully configurable diagnostics allowing fault history and reading fault codes at the unit via Symbio™ 700 board or app. The following faults are detected:

- Air temperature sensor failure/fault
- Notification of acceptable economizer mode

The FDD system is certified by the Energy Commission as meeting the requirements.

Flexibility

For flexibility, units are built to order in our standard ship cycle time.

High Altitude Kit

High Altitude Kits contain gas orifices that derate the gas input rate (BTUH) by 10 percent for use on units applied above 2,000 feet. Domestic contractors should consult with local authority on best practice.

Note: *The High Altitude Kit is not available with the Ultra Low NOx gas furnace option.*

High Efficiency Filtration

There are a variety of high efficiency filtration options. MERV 8 and MERV 13 filters provide additional filtration beyond the capabilities of 2-inch standard filters.

High Static Motor

The high static motor option provides additional capabilities beyond the standard motor. Available on select models, as shown in general data tables.

Hinged Access Doors

Hinged access doors permit easy access to the filter, fan, and compressor/control sections. Risk of roof damage from screws or sharp access panel corners is reduced.

Figure 7. Hinged access doors

Humidity Sensor/Humidistat

The humidity sensor/humidistat, when used in conjunction with our dehumidification (hot gas reheat) units provides outstanding humidity control and comfort. Humidity sensors can be wall or duct mounted. The humidity deadband can be set between 40% and 60% relative humidity.

Leak Detection System

The Leak Detection System (LDS) consists of one or more refrigerant detection sensors and is required in ducted HVAC systems that have more than 3.91 lbs of A2L refrigerant charge, per safety standard UL 60335-2-40. For any units with more than 3.91 lbs of charge in a circuit, an LDS will be factory-installed. Having the leak detector installed in the factory by the manufacturer on applicable units reduces the risk of improper installation in the field as well as bypassing the added cost in the field for installation, leading to peace of mind that the right solution has been applied to your unit.

Low Ambient Cooling

All units have cooling capabilities down to 40°F. Field installed accessory extends operation down to 0°F.

Low Leak Economizer

This accessory meets low leak requirements for ASHRAE 90.1, IECC, and CA Title 24 standards (4 cfm/ft^2@1inch wg exterior air/return air). This option allows 0 to 100 percent outdoor air supply from modulating dampers and is standard with barometric relief. It can be paired with power exhaust for additional building pressure relief. This option can be paired with or without fault detection and diagnostics (FDD) to meet current mandatory CA Title 24 requirements.

The economizers come with four control options: dry bulb, reference enthalpy, comparative enthalpy, or differential dry bulb.

Figure 8. Low leak economizer

Note: *Downflow low leak economizer is available as a factory installed option. Horizontal low leak economizer is only available as a field installed option.*

LP Conversion Kit

This kit allows for field conversion of gas/electric units from natural gas to propane.

Note: *The Ultra Low NOx gas furnace option is for natural gas operation only.*

Modulating Gas Heat

Note: *Not available with 3 to 5 ton units.*

Modulating natural gas heat option, with a high modulation range of 10:1, automatically modulates the gas value and combustion blower motor, providing improved comfort with stable temperature control. Modulating gas heat option includes stainless steel heat exchanger.

- Less on/off cycling
- Continuous heating output
- Wide operation range (low and high heat)
- Coupled with variable speed fan control enables independent control of supply airflow and discharge air temperature
- With Zoned Rooftop Systems, modulating gas heat enables effective supply air tempering as well as warm-up sequences

Hot Water Coil Control (Hydronic Heat)

Hot water coil control, managed through the Precedent Symbio™ 700 controller, modulates a customer-supplied and customer-installed hot water coil valve to provide precise, stable heat control through a hydronic system. Paired with a supply-duct-mounted temperature sensor (included), it helps maintain accurate discharge-air temperature control and consistent performance. This added flexibility supports applications where customers want to leverage an hot water system for heat. By integrating control through a single platform, it reduces the need for additional field-installed controls while helping ensure consistent, reliable performance. Available as a factory-installed option on cooling-only and heat pump models across all tonnages and efficiency levels.

Hot Water Coil — Freeze Avoidance

Freeze avoidance helps prevent freezing of hot water heat coil during periods of unit inactivity and low ambient temperature. Whenever the unit supply fan is off, the outdoor air temperature is monitored. If the temperature falls below a predetermined value, the heating valve is opened to a position selected on the user interface to allow a minimum amount of hot water to flow through the coil and avoid freezing conditions.

SCR Modulating Electric Heat

SCR modulating electric heat, paired with a supply-duct-mounted temperature sensor (included), continuously modulates heater output to maintain tighter discharge-air temperature control and reduce temperature fluctuation in occupied spaces. Integrated with the Symbio™ 700 controller, the system provides proportional electric heat control for improved comfort, more precise leaving-air temperature performance, and reduced reliance on additional field-installed control components. On heat pump configurations, the controller coordinates mechanical heating and auxiliary SCR electric heat to maintain the required space temperature. Available as a factory-installed or field-installed option on cooling-only and heat pump models across all tonnages, efficiency levels, and current kW offerings, including retrofit applications.

- Less on/ off cycling
- Continuous heating output
- Wide operation range
- Coupled with variable speed fan control enables independent control of supply airflow and discharge air temperature
- With Zoned Rooftop System, SCR modulating electric heat enables effective supply air tempering as well as warm-up sequences

Humidity Control – Modulating Hot Gas Reheat (HGRH)

The factory-installed modulating hot gas reheat (HGRH) humidity control system allows for full independent control of latent capacity (via staged or modulating refrigeration system) and independent control of discharge air temperature (via a modulating hot gas reheat valve). This provides tightly controlled humidity levels without overcooling the space to deliver year-round comfort by improving indoor air quality.

- Modulating reheat, no more on/off
- Maintains stable neutral leaving air temperature, resulting in less cycling

- Includes both relative humidity and dew point control
- Available on downflow or horizontal

Multi-Speed Indoor Fan System

Note: *Not available with 3 to 5 ton standard efficiency units.*

This system incorporates multi-speed fan control to change the speed of the fan to 66 percent of full airflow depending on compressor stages.

Multiple-Zone VAV (MZVAV)

Note: *Not available with 3 to 5 ton standard efficiency units.*

MZVAV is a system that consists of a packaged rooftop unit that serves several individually controlled zones. Each zone is equipped with a VAV terminal unit that varies the quantity of air delivered to maintain the desired temperature in that zone. The rooftop unit controller varies the speed of the indoor fan to maintain the static pressure in the supply ductwork at a setpoint, verifying that all zones receive required air. Cooling capacity is cycled to maintain the supply air temperature at the desired setpoint.

Quick Adapt Curbs

Enables easy upgrade of existing Precedent™ and Voyager™ 3 to 25 tons units on replacement jobs.

Rigorous Testing

Precedent quality is validated through rigorous factory testing:

- Rain testing for water integrity.
- Transportation vibration and forklift testing.
- Rigging lift and drop tests for lifting lug and rail integrity.
- Leak testing, including 100 percent coil leak test, and assembled unit leak test to 465 psig.
- Final assembly inspection.
- Run test (100 percent) to confirm performance requirements.

Single Zone VAV (SZVAV)

Note: *Not available with 3 to 5 ton standard efficiency units.*

SZVAV is fully integrated into the control system. It provides the simplest and fastest commissioning in the industry through proven factory-installed, wired, and tested system controllers. All control modules, logic boards and sensors are factory installed and tested to confirm the highest quality and most reliable system available. This means no special programming of algorithms, or hunting at the jobsite for field installed sensors, boards, etc. SZVAV is a quick and simple solution for many applications and is available from your most trusted rooftop system solution provider -Trane.

Building system modeling in energy simulation software such as TRACE is recommended to evaluate performance improvements for your application.

Supply/Return Air Smoke Detector

Note: *Supply side smoke detector is not available with A.0 cabinet units.*

With this option installed, if smoke is detected, all unit operation will be shut down. Reset will be manual at the unit. In order for the supply air smoke detector or return air smoke detector to properly sense smoke in the supply air stream or the return air stream, the air velocity entering the smoke detector unit must be between 500 to 4000 feet per minute. Equipment covered in this manual will develop an airflow velocity that falls within these limits over the entire airflow range specified in the evaporator fan performance table.

Through-the-Base Condensate

Through-the-base condensate drain connections, available on A.0, B.0, and C.0 cabinet units, allow the drain to be connected through the roof curb, and avoid the need for roof modification.

Through-the-Base Electrical Access

An electrical service entrance is provided to allow electrical access for both control and main power connections inside the curb and through-the-base of the unit. Option will allow for field installation of liquid-tight conduit and an external field installed disconnect switch.

Through-the-Base Gas Piping

Factory-provided through-the-base openings simplify piping. Because these utility openings frequently minimize the number of roof penetrations, the integrity of roofing materials is enhanced.

This option includes all necessary piping, including black steel, manual gas shut-off valve, elbows, and union. This assembly requires field installation.

Note: *Through-the-base gas is not available with the Ultra Low NOx gas furnace option.*

Optional Ultra-Low NOx Gas Furnace

The 3 to 5 ton high efficiency dual fuel heat pump lineup has an Ultra-Low NOx option that meets the 14 ng/J requirement for the gas furnace included with this dual fuel heat pump.

Use the sustainable heat pump technology for most heating needs, leveragine the stainless steel Ultra-Low NOx natural gas auxiliary furnace only when needed down to 32°F. See “A2L Application Considerations,” p. 20. This option provides ease and reduced cost for gas unit replacement, as the existing gas and electrical connections can be used in most cases, eliminating the need for electrical supply upgrade.

Gas-heat models (natural gas only) provide 14 ng/J NOx furnace emissions to comply with California's South Coast Air Quality Management District (SCAQMD) and San Joaquin Valley Air Pollution Control District (SJVAPCD) requirements.

Ventilation Override

Ventilation override allows the unit to transition to up to three different pre-programmed sequences for smoke purge, pressurization, and exhaust. The transition occurs when a binary input on the Customer Connection Module is closed (shorted). This would typically be a hard wired relay output from a smoke detector or fire control panel. The Customer Connection module that allows ventilation override is available as a field installed accessory (FIASCCM001*). For more information on functionality, see *Symbio™ 700 Controller with Precedent™ Packaged Rooftop Air-Conditioners Application Guide* (ACC-APG002*-EN).

Application Considerations

A2L Application Considerations

This product is listed to UL standard 60335-2-40, Household and Similar Electrical Appliances – Safety – Part 2-40: Particular Requirements for Electrical Heat Pumps, Air-Conditioners and Dehumidifiers, which defines safe design and use strategies for equipment using A2L refrigerants. This standard limits the refrigerant concentration in a space in the event of a refrigerant leak. To meet the requirements, the UL standard defines minimum room area, refrigerant charge limit, minimum circulation airflow and/or ventilation airflow requirements, and limits the use of ignition sources in spaces. The standard may require a unit refrigerant leak detection system.

For equipment with R-454B and charge amounts less than or equal to 3.91 lbs per circuit, this UL standard does not prescribe a room area limit and does not require a refrigerant leak detection system or any circulation airflow or ventilation airflow mitigation strategies. However, ignition sources in ductwork must be evaluated.

Depending on the application, a specific requirement of ANSI/ASHRAE Standard 15, Safety Standard for Refrigeration Systems, could be more stringent than UL 60335-2-40 requirements. See *Refrigeration Systems and Machinery Rooms Application Considerations for Compliance with ASHRAE® Standard 15-2022 Application Engineering Manual* (APP-APM001*-EN) for more information.

Minimum Room Area Limits (Refrigerant charge greater than 3.91 lb per circuit)

Equipment with R-454B charge amounts greater than 3.91 lb per circuit may require additional circulation or ventilation airflow mitigation strategies. In this case, two minimum room area (A_{min}) thresholds:

- The first threshold defines when equipment serving a single room is required to provide circulation airflow, either continuous or activated by a leak detection system. A ducted system requires circulation airflow unless the smallest room it serves is larger than the adjusted A_{min} threshold. This product contains a leak detection system if a circuit charge is greater than 3.91 lbs. As a result, no further leak detection system evaluation is required.
- The second threshold defines when additional ventilation airflow is required. If the room area, A or TA, is below the adjusted A_{min} or TA_{min} threshold, additional ventilation is required to remove refrigerant in the event of a leak. Refer to UL 60335-2-40 Clause GG.8 and ANSI\ASHRAE Standard 15 Section 7 for natural and mechanical ventilation requirements. For minimum room area, see equipment nameplate or unit Installation, Operation, and Maintenance (IOM) manual.

Minimum Room Area (A_{min}) Adjustments

- **Altitude:** The A_{min} threshold changes with altitude. Multiple the altitude adjustment factor in the following table by Amin shown on the unit nameplate or in the Installation, Operation, and Maintenance (IOM) manual.

Table 5. Altitude adjustment factor

Altitude (ft)	Sea Level to 2000	2001 to 4000	4001 to 6000	6001 to 8000	8001 to 10000	10001 to 12000	12001 to 14000	14001 to 15000	Over 15000
A_{min} Adjustment	1	1.05	1.11	1.17	1.24	1.32	1.41	1.51	1.57

- **Height :** A_{min} can be adjusted if the unit is installed in a room at a height higher than the minimum height shown on the unit. Multiply A_{min} by the ratio of the unit minimum release height (in meters) / actual release height (in meters).
- **Institutional Occupancies:** For institutional occupancies, ASHRAE Standard 15 applies an additional adjustment factor, FOCC, to the amount of charge allowed in a space. To calculate the adjusted A_{min} for institutional occupancies, divide the A_{min} on the nameplate by 0.5.

Determining Room Area (A or TA)

The room area (A) is the room area enclosed by the projection to the floor of the walls, partitions, and doors of the space that the equipment serves. For ducted systems, total room area (TA) of all rooms connected by ducts, may be used instead of A.

Rooms connected by drop ceilings only are not considered a single room.

Rooms on the same floor of the building, and connected by an open passageway, can be considered part of the same room if the passageway is a permanent opening, extends to the floor and is intended for people to walk through.

Adjacent rooms on the same floor of the building and connected by permanent openings in the walls and/or doors between rooms (including gaps between the wall and the floor), can be considered part of the same room if the openings meet the following criteria.

- The opening is permanent and cannot be closed.
- Openings extending to the floor, such as door gaps, need to be at least 20 mm above the floor covering surface.
- Natural ventilations opening areas must meet the requirements of ANSI\ASHRAE Standard 15-2022, Section 7.2.3.2.

Rooms that are connected by a mechanical ventilation system can be considered a single room area if the mechanical ventilation system meets the requirements of ANSI\ASHRAE Standard 15-2022, Section 7.6.4.

Leak Detection System (Refrigerant charge greater than 3.91 lb per circuit)

The leak detection system consists of one or more refrigerant detection sensors. When the system detects a leak, the following mitigation actions will be initiated until refrigerant has not been detected for at least 5 minutes:

- Energize the supply fan(s) to deliver a required minimum amount of circulation airflow.
- Disable compressor operation.
- Provide an output signal that can be used to fully open zone dampers and/or VAV boxes and disable electric heat in VAV boxes.
- Provide an output signal that can be used to energize additional mechanical ventilation (if needed).
- Units without airflow proving will disable electric heat sources.

Building fire and smoke systems may override this function.

If the refrigerant sensor has a fault, is at the end of its life, or is disconnected, the unit will initiate the mitigation actions. Mitigation actions may be verified by disconnecting the sensor.

The refrigerant sensors do not need service. Use only manufacturer-approved sensors when replacement is required.

Optional Ultra-Low NOx Gas Furnace

These units are designed for California's mild ambient operating conditions only. There is a risk of heating failure when the start-up temperature is below freezing (0°C or 32°F).

The Ultra-Low NOx gas furnace includes a safety switch that will lock out operation below 32°F.

Note: *Ultra-low NOx units are not compatible with horizontal discharge units.*

Auxiliary Gas Heating Operation

The heat exchanger is manufactured with aluminized steel. To prevent condensation within the heat exchanger, do not exceed 50% outside air or a minimum mixed air temperature of 40°F.

Optional Stainless Steel Heat Exchanger

The optional stainless steel heat exchanger is manufactured with 409 stainless steel tubes and 439 stainless steel burners. To prevent corrosion and prolong heat exchanger reliability, the minimum mixed air temperature allowed across the heat exchanger is 20°F.

The stainless steel heat exchanger option is an excellent option that compliments the dehumidification package. Whenever high outside air or outside applications exist, these options should be utilized.

Model Number Description

Digit 1 — Unit Function

W = Packaged Heat Pump
D = Dual Fuel Heat Pump

Digit 2 — Cooling Efficiency

S = Standard Efficiency
H = High Efficiency

Digit 3 — Refrigerant

K = R-454B

Digit 4,5,6 — Nominal Gross Cooling Capacity (MBh)

036 = 3 Ton
048 = 4 Ton
060 = 5 Ton
072 = 6 Ton
090 = 7.5 Ton
102 = 8.5 Ton
120 = 10 Ton
150 = 12.5 Ton
180 = 15 Ton
210 = 17.5 Ton
240 = 20 Ton
300 = 25 Ton

Digit 7 — Design Sequence

Digit 8 — Voltage Selection

3 = 208–230/60/3
4 = 460/60/3
W = 575/60/3

Digit 9 — Unit Controls

S = Symbio™ 700

Digit 10 — Heat Type

0 = Base Model
A = Stainless Steel Gas Heat
B = Modulating Gas Heat
C = Ultra-Low NOx Gas Heat
E = SCR Modulating Electric Heat
F = Hot Water Coil Control (Hydronic Heat)

Digit 11 — Heating Capacity

0 = No Heat
B = 6kW Electric Heat
C = 9kW Electric Heat
E = 12 kW Electric Heat
G = 18 kW Electric Heat
J = 23 kW Electric Heat
K = 27 kW Electric Heat
N = 36 kW Electric Heat
P = 54 kW Electric Heat
R = 72 kW Electric Heat
L = Low Gas Heat
M = Medium Gas Heat
H = High Gas Heat

Digit 12, 13 — Service Sequence

** = Factory Assigned

Digit 14 — Fresh Air Selection

0 = No Fresh Air
A = Manual Outside Air Damper 0–50%
B = Motorized Outside Air Damper 0–50%
C = Economizer, Dry Bulb 0–100% without Barometric Relief
D = Economizer, Dry Bulb 0–100% with Barometric Relief
E = Economizer, Reference Enthalpy 0–100% without Barometric Relief
F = Economizer, Reference Enthalpy 0–100% with Barometric Relief
G = Economizer, Comparative Enthalpy 0–100% without Barometric Relief
H = Economizer, Comparative Enthalpy 0–100% with Barometric Relief
K = Downflow Low Leak Economizer, Dry Bulb with Barometric Relief
M = Downflow Low Leak Economizer, Reference Enthalpy with Barometric Relief
P = Downflow Low Leak Economizer, Comparative Enthalpy with Barometric Relief
R= Downflow Low Leak Economizer, Differential Dry Bulb with Barometric Relief

Digit 15 — Supply Fan/Motor

0 = Multi-Speed Motor
1 = Optional High Static Motor
2 = Single Zone Variable Air Volume with Standard Motor
3 = Single Zone Variable Air Volume with High Static Motor
4 = Multiple Zone Variable Air Volume with Standard Motor
5 = Multiple Zone Variable Air Volume with Oversized/High Static Motor

Digit 16 — Hinged Access/Filters

0 = Standard Panels/Standard Filters
A = Hinged Access Panels/Standard Filters
B = Standard Panels/2 inch MERV 8 Filters
C = Hinged Access Panels/2 inch MERV 8 Filters
D = Standard Panels/2 inch MERV 13 Filters
E = Hinged Access Panels/2 inch MERV 13 Filters

Digit 17 — Coil Protection

0 = Standard Coil
1 = Condenser with CompleteCoat

Digit 18 — Through-the-Base Provisions

0 = No Through-the-Base Provisions
A = Through-the-Base Electric
B = Through-the-Base Gas Piping
C = Through-the-Base Electric and Gas Piping

Digit 19 — Disconnect/Circuit Breaker (three-phase only)

0 = No Disconnect/No Circuit Breaker
1 = Unit Mounted/Non-Fused Disconnect
2 = Unit Mounted Circuit Breaker

Digit 20— Convenience Outlet

0 = No Convenience Outlet
A = Unpowered 20A Convenience Outlet
B = Powered 15A Convenience Outlet

Digit 21— Communications Options

0 = No Communications Interface
1 = Advanced Controller with BACnet® Communications Interface
3 = Advanced Controller with Air-Fi® Communications Interface

Digit 22— Refrigeration System Option

0 = Standard Refrigeration System
A = Humidity Control Option

Digit 23— Controls Expansion Module

0 = None
1 = XM-30 Expansion Module
2 = XM-32 Expansion Module
3 = XM-30 and XM-32 Expansion Module
4 = XM–30 Expansion Module (Qty 2)
5 = XM–32 Expansion Module (Qty 2)

Digit 24— Smoke Detector

0 = No Smoke Detector
A = Return Air Smoke Detector
B = Supply Air Smoke Detector
C = Supply and Return Air Smoke Detectors

Digit 25— System Monitoring Controls

0 = No Monitoring Control
1 = Clogged Filter Switch
2 = Condensate Overflow Switch
3 = Discharge Air Sensing Tube
4 = Clogged Filter Switch and Condensate Overflow Switch
5 = Clogged Filter Switch and Discharge Air Sensing Tube
6 = Condensate Overflow Switch and Discharge Air Sensing Tube
7 = Clogged Filter Switch, Condensate Overflow Switch and Discharge Air Sensing Tube

Digit 26— Not Used

Digit 27— Hardware Enhancements

0 = No Enhancements
1 = Stainless Steel Drain Pan

Digit 28— Short Circuit Current Rating

0 = Standard (5k) SCCR Marking
A = Tier 2 (65K) SCCR Marking

Digit 29— Low Ambient

0 = None
A = Low Ambient Cooling to 0°F

Table 6. General data — standard efficiency — heat pump

	3 Tons	4 Tons	5 Tons	6 Tons	7.5 Tons	8.5 Tons	10 Tons	12.5 Tons	15 Tons	17.5 Tons	20 Tons	25 Tons
	WSK036	WSK048	WSK060	WSK072	WSK090	WSK102	WSK120B	WSK150	WSK180	WSK210	WSK240	WSK300
Cooling Performance[a]												
Gross Cooling Capacity	38000	51000	60500	77000	90000	108000	121000	152000	181000	210000	245000	266000
EER[b] / EER2[c]	12.0/11.0	12.0/11.0	12.0/11.0	11.0	11.0	11.0	11.0	10.6	10.6	10.6	9.5	9.5
Nominal cfm/AHRI Rated cfm	1200/1200	1600/1600	2000/2000	2400/2400	3000/3000	3400/3400	4000/4000	5000/5000	6000/5250	7000/7000	8000/8000	10000/8750
AHRI Net Cooling Capacity	37000	49500	58500	76000	88000	106000	118000	150000	178000	206000	240000	260000
IEER[d] (2-Speed) / SEER[b]/ SEER2[c]	14.3/13.4	14.3/13.4	14.3/13.4	14.1	14.1	14.1	14.1	13.5	13.5	13.5	12.5	12.5
IEER (SZVAV/MZVAV)	—	—	—	14.6/14.6	14.6/14.6	14.6/14.6	14.6/14.6	14.0/14.0	14.0/14.0	14.0/14.0	12.9/12.9	12.9/12.9
System Power (kW)	3.36	4.50	5.32	6.54	8.18	9.27	10.73	14.15	16.79	19.43	25.26	27.37
Heating Performance[e]												
High Temp Btuh Rating	31000	43000	51000	68000	81000	97000	104000	133000	160000	190000	218000	238000
System Power (kW) / COP / COP2[f]	2.60/3.50/ 3.50	3.60/3.50/ 3.50	4.27/3.50/ 3.50	5.85/3.40	6.97/3.40	8.35/3.40	8.96/3.40	11.81/3.3	14.21/3.3	16.87/3.3	19.96/3.2	21.79/3.2
Low Temp Btuh Rating	16400	24400	29600	38000	45000	55000	63000	82000	96000	104000	122000	126000
System Power (kW) / COP / COP2[f]	2.40/2.04/ 2.00	3.31/2.20/ 2.16	3.98/2.20/ 2.18	4.95/2.25	5.86/2.25	7.16/2.25	8.20/2.25	11.72/2.05	13.72/2.05	14.86/2.05	17.44/2.05	18.01/2.05
HSPF[g] / HSPF2[h]	8.0/6.7	8.2/6.7	8.2/6.7	—	—	—	—	—	—	—	—	—
Compressor												
Number/Type	1/Scroll	1/Scroll	1/Scroll	2/Manifold Scroll	2/Manifold Scroll	2/Manifold Scroll	2/Manifold Scroll	2/Manifold Scroll	2/Manifold Scroll	2/Manifold Scroll	2/Manifold Scroll	2/Manifold Scroll
Percent Capacity (Stage 1 - Stage 4)	100	100	100	34/66/100	33/67/100	32/68/100	28/72/100	32/68/100	33/67/100	33/67/100	24/36/64/ 100	25/37/63/ 100
Sound												
Outdoor Sound Rating (dBA)	79	82	82	86	86	86	89	87	87	91	93	93
Outdoor Coil												
Type	RTPF Lanced	RTPF Lanced	RTPF Lanced	RTPF Lanced	RTPF Lanced	RTPF Lanced	RTPF Lanced	RTPF Lanced	RTPF Lanced	RTPF Lanced	RTPF Lanced	RTPF Lanced
Configuration	Full Face	Full Face	Full Face	Full Face	Full Face	Full Face	Full Face	Full Face	Full Face	Full Face	Full Face	Full Face
Tube Size (in.)	0.313	0.313	0.313	0.313	0.313	0.313	0.313	0.313	0.313	0.313	0.313	0.313
Face Area (sq. ft.)	11.20	11.20	11.20	19.6	19.6	23.57	23.57	34.71	34.71	34.71	40.05	40.05
Rows/FPI (Fins per inch)	2/16	3/16	3/16	3/16	3/16	3/16	3/16	3/16	3/16	3/16	3/16	3/16
Refrigerant Control	TXV	TXV	TXV	TXV	TXV	TXV	TXV	TXV	TXV	TXV	TXV	TXV
Indoor Coil												

Table 6. General data — standard efficiency — heat pump (continued)

	3 Tons	4 Tons	5 Tons	6 Tons	7.5 Tons	8.5 Tons	10 Tons	12.5 Tons	15 Tons	17.5 Tons	20 Tons	25 Tons
	WSK036	WSK048	WSK060	WSK072	WSK090	WSK102	WSK120B	WSK150	WSK180	WSK210	WSK240	WSK300
Type	RTPF Lanced	RTPF Lanced	RTPF Lanced	RTPF Lanced	RTPF Lanced	RTPF Lanced	RTPF Lanced	RTPF Lanced	RTPF Lanced	RTPF Lanced	RTPF Lanced	RTPF Lanced
Configuration	Full Face	Full Face	Full Face	Full Face	Full Face	Full Face	Full Face	Full Face	Full Face	Full Face	Full Face	Full Face
Tube Size (in.)	0.313	0.313	0.313	0.313	0.313	0.313	0.313	0.313	0.313	0.313	0.313	0.313
Face Area (sq. ft.)	8.74	8.74	10.28	12.68	12.68	12.68	12.68	25.83	25.83	25.83	30.09	30.09
Rows/FPI (Fins per inch)	3/16	3/16	3/16	4/16	4/16	4/16	4/16	4/16	4/16	4/16	4/16	4/16
Refrigerant Control	TXV	TXV	TXV	TXV	TXV	TXV	TXV	TXV	TXV	TXV	TXV	TXV
Drain Connection No./Size (in.) NPT	1/0.75	1/0.75	1/0.75	1/0.75	1/0.75	1/0.75	1/0.75	1/1.0	1/1.0	1/1.0	1/1.0	1/1.0
Reheat Coil												
Type	RTPF Lanced	RTPF Lanced	RTPF Lanced	RTPF Lanced	RTPF Lanced	RTPF Lanced	RTPF Lanced	RTPF Lanced	RTPF Lanced	RTPF Lanced	RTPF Lanced	RTPF Lanced
Configuration	Full Face	Full Face	Full Face	Full Face	Full Face	Full Face	Full Face	Full Face	Full Face	Full Face	Full Face	Full Face
Tube Size (in.)	0.313	0.313	0.313	0.313	0.313	0.313	0.313	0.313	0.313	0.313	0.313	0.313
Face Area (sq. ft.)	7.19	7.19	7.19	11.49	11.49	11.49	11.49	25.83	25.83	25.83	25.83	25.83
Rows/FPI (Fins per inch)	1/16	1/16	1/16	1/16	1/16	1/16	1/16	1/16	1/16	1/16	1/16	1/16
Outdoor Fan												
Type	Propeller	Propeller	Propeller	Propeller	Propeller	Propeller	Propeller	Propeller	Propeller	Propeller	Propeller	Propeller
No. Used/Diameter (in.)	1/22	1/22	1/22	1/26	1/26	1/26	1/26	2/26	2/26	2/28	2/28	2/28
Drive Type/No. Speeds	Direct/1	Direct/1	Direct/1	Direct/1	Direct/1	Direct/1	Direct/1	Direct/1	Direct/1	Direct/1	Direct/1	Direct/1
CFM	3500	3800	3800	5900	7200	7200	7200	13450	13450	15810	15810	15810
Motor HP/ Motor HP Modulating HGRH	0.25	0.33	0.33	0.70/0.75	0.75	0.75	0.75	1.00	1.00	1.00	1.00	1.00
Motor RPM	1100	1100	1100	1100	1100	1100	1100	1125	1125	1125	1125	1125
Indoor Fan												
Type	FC Centrifugal	FC Centrifugal	FC Centrifugal	BC Plenum	BC Plenum	BC Plenum	BC Plenum	BC Plenum	BC Plenum	BC Plenum	BC Plenum	BC Plenum
No. Used/Diameter (in.)/ Width (in.)	1/11x11	1/11x11	1/11x11	1/23x6	1/23x6	1/23x6	1/23x6	2/23x6	2/23x6	2/23x6	2/23x6	2/23x6
Drive Type/No. Speeds/RPM	Direct/5	Direct/5	Direct/5	Direct / Variable	Direct / Variable	Direct / Variable	Direct / Variable	Direct / Variable	Direct / Variable	Direct / Variable	Direct / Variable	Direct / Variable
Motor HP (Standard/ Oversized)	0.75 (1.0)[i] /1.5	1.0 / 1.5	1.0 / 1.5	2.9 / -	2.9 / -	2.9 / -	2.9 / 4.2	2.9 / –	2.9 / –	2.9 / –	2.9 / –	2.9 / 4.2
Max Motor RPM	1200/1400	1200/1400	1200/1400	1850	1850	1850	1850/1940	1850	1850	1850	1850	1850/1940

Table 6. General data — standard efficiency — heat pump (continued)

	3 Tons	4 Tons	5 Tons	6 Tons	7.5 Tons	8.5 Tons	10 Tons	12.5 Tons	15 Tons	17.5 Tons	20 Tons	25 Tons
	WSK036	WSK048	WSK060	WSK072	WSK090	WSK102	WSK120B	WSK150	WSK180	WSK210	WSK240	WSK300
Filters[i]												
Type Furnished	Throwaway	Throwaway	Throwaway	Throwaway	Throwaway	Throwaway	Throwaway	Throwaway	Throwaway	Throwaway	Throwaway	Throwaway
Number Size Recommended	(4) 20x20x2	(4) 20x20x2	(4) 20x20x2	(2) 18x24x2 (3) 24x16x2	(2) 18x24x2 (3) 24x16x2	(2) 18x24x2 (3) 24x16x2	(2) 18x24x2 (3) 24x16x2	(8) 20x24x2	(8) 20x24x2	(8) 20x24x2	(4) 20x24x2 (4) 20x30x2	(4) 20x24x2 (4) 20x30x2
Refrigerant Charge												
lbs of R-454B	6.1	7.9	8.0	15.2	15.5	16.5	16.8	31.5	32.0	31.0	38.0	35.0
lbs of R-454B, Hot Gas Reheat	6.6	8.6	8.5	16.8	17.0	18.0	17.8	35.0	33.0	33.0	42.0	36.0
Cabinet												
Cabinet Size	A0	A0	A0	B0	B0	B0	B0	D0	D0	D0	D1	D1

(a) The 3 to 5 ton cooling performance is rated at 95°F ambient, 80°F entering dry bulb, 67°F entering wet bulb. Gross capacity does not include the effect of fan motor heat. AHRI capacity is net and includes the effect of fan motor heat. Units are suitable for operation to ±20% of nominal cfm. Units are certified in accordance with the Unitary Air-Conditioner Equipment certification program, which is based on AHRI Standard 210/240.

(b) SEER shown for 3 to 5 ton units only. The 3 to 5 ton EER and SEER are rated at AHRI conditions and calculated in accordance with AHRI Standard 210/240-2017. Airflow and net cooling capacity not shown.

(c) EER2 and SEER2 shown for 3 to 5T units only. EER2 and SEER2 are rated at AHRI conditions and certified in accordance with AHRI Standard 210/240-2023.

(d) IEER shown for 6 to 25 ton units only.

(e) The 3 to 5T heating performance is rated at 47°F ambient with 43°F wet bulb, 70°F entering dry bulb, 60°F entering wet bulb. High temp Btuh rating includes the effect of fan motor heat. Units are suitable for operation to ±20% of nominal cfm. Units are certified in accordance with the Unitary Air-Conditioner Equipment certification program, which is based on AHRI Standard 210/240.

(f) COP2 shown for 3 to 5 ton units only.

(g) HSPF is rated at AHRI conditions and calculated in accordance with AHRI Standard 210/240-2017. Airflow and heating capacities not shown.

(h) HSPF2 is rated at AHRI conditions and certified in accordance with AHRI Standard 210/240-2023.

(i) WSK036 uses 1HP as standard motor for 575V application.

(j) Outdoor sound rating shown is tested in accordance with AHRI 370-2015. For additional information reference the outdoor sound power level data in the performance section.

Table 7. General data — high efficiency — heat pump

	3 Tons	4 Tons	5 Tons	6 Tons	7.5 Tons	8.5 Tons	10 Tons	12.5 Tons	15 Tons	17.5 Tons	20 Tons	25 Tons
	WHK036	WHK048	WHK060	WHK072	WHK090	WHK102	WHK120	WHK150	WHK180	WHK210	WHK240	WHK300
Cooling Performance[a]												
Gross Cooling Capacity	36700	50000	61300	77000	90000	108000	121000	152000	181000	210000	245000	266000
EER[b] / EER2[c]	13.6/12.8	13.6/12.8	13.6/12.8	12.8	12.0	12.1	11.4	12.1	11.7	11.3	10.9	10.1
Nominal cfm/AHRI Rated cfm	1200/1200	1600/1600	2000/2000	2400/2400	3000/3000	3400/3400	4000/4000	5000/5000	6000/5250	7000/7000	8000/8000	10000/8750
AHRI Net Cooling Capacity	36000	49000	60000	76000	88000	106000	118000	150000	178000	206000	240000	260000
IEER[d] (2-Speed) / SEER[b]/ SEER2[c]	16.8/16.2	16.8/16.2	16.4/15.8	16.3	15.5	17.0	16.1	16.8	16.8	16.2	16.4	15.5
IEER (SZVAV/MZVAV)	—	—	—	16.8/16.8	16.0/16.0	17.5/17.5	16.6/16.6	17.2/17.2	17.3/17.3	16.7/16.7	16.9/16.9	16.0/16.0
System Power (kW)	2.81	3.83	4.69	5.94	7.33	8.76	10.35	12.4	15.21	18.23	22.02	25.74
Heating Performance[e]												
High Temp Btuh Rating	32400	43000	53500	68000	81000	97000	104000	133000	160000	190000	218000	238000
System Power (kW) / COP / COP2[f]	2.50/3.80/ 3.80	3.32/3.80/ 3.74	4.13/3.80/ 3.74	5.36/3.72	6.40/3.71	7.60/3.74	8.54/3.57	10.82/3.6	12.92/3.6	15.46/3.6	18.25/3.5	20.5/3.4
Low Temp Btuh Rating	19200	25600	33400	38000	45000	55000	63000	82000	96000	104000	122000	126000
System Power (kW) / COP / COP2[f]	2.32/2.46/ 2.42	3.10/2.46/ 2.42	3.98/2.46/ 2.46	4.95/2.25	5.86/2.25	7.16/2.25	8.20/2.25	10.63/2.26	12.45/2.26	13.85/2.2	15.89/2.25	18.01/2.05
HSPF[g] / HSPF2[h]	8.5/7.2	8.5/7.2	8.5/7.2	—	—	—	—	—	—	—	—	—
Compressor												
Number/Type	1/Scroll	1/Scroll	1/Scroll	2/Manifold Scroll	2/Manifold Scroll	2/Manifold Scroll	2/Manifold Scroll	2/Manifold Scroll	2/Manifold Scroll	2/Manifold Scroll	2/Manifold Scroll	2/Manifold Scroll
Percent Capacity (Stage 1 - Stage 4)	67/100	67/100	67/100	34/66/100	33/67/100	32/68/100	28/72/100	32/68/100	33/67/100	33/67/100	24/36/64/ 100	25/37/63/ 100
Sound												
Outdoor Sound Rating (dBA)	85	88	88	86	86	86	89	87	87	91	93	93
Outdoor Coil												
Type	RTPF Lanced	RTPF Lanced	RTPF Lanced	RTPF Lanced	RTPF Lanced	RTPF Lanced	RTPF Lanced	RTPF Lanced	RTPF Lanced	RTPF Lanced	RTPF Lanced	RTPF Lanced
Configuration	Full Face	Full Face	Full Face	Full Face	Full Face	Full Face	Full Face	Full Face	Full Face	Full Face	Full Face	Full Face
Tube Size (in.)	0.313	0.313	0.313	0.313	0.313	0.313	0.313	0.313	0.313	0.313	0.313	0.313
Face Area (sq. ft.)	19.60	19.60	19.60	19.60	19.60	23.57	23.97	34.71	34.71	34.71	40.05	40.05
Rows/FPI (Fins per inch)	3/16	3/16	3/16	3/16	3/16	3/16	4/16	3/16	3/16	3/16	3/16	3/16
Refrigerant Control	TXV	TXV	TXV	TXV	TXV	TXV	TXV	TXV	TXV	TXV	TXV	TXV
Indoor Coil												

Table 7. General data — high efficiency — heat pump (continued)

	3 Tons	4 Tons	5 Tons	6 Tons	7.5 Tons	8.5 Tons	10 Tons	12.5 Tons	15 Tons	17.5 Tons	20 Tons	25 Tons
	WHK036	WHK048	WHK060	WHK072	WHK090	WHK102	WHK120	WHK150	WHK180	WHK210	WHK240	WHK300
Type	RTPF Lanced	RTPF Lanced	RTPF Lanced	RTPF Lanced	RTPF Lanced	RTPF Lanced	RTPF Lanced	RTPF Lanced	RTPF Lanced	RTPF Lanced	RTPF Lanced	RTPF Lanced
Configuration	Full Face	Full Face	Full Face	Full Face	Full Face	Full Face	Full Face	Full Face	Full Face	Full Face	Full Face	Full Face
Tube Size (in.)	0.313	0.313	0.313	0.313	0.313	0.313	0.313	0.313	0.313	0.313	0.313	0.313
Face Area (sq. ft.)	12.68	12.68	12.68	12.68	12.68	12.68	15.60	25.83	25.83	25.83	30.09	30.09
Rows/FPI (Fins per inch)	3/16	3/16	3/16	4/16	4/16	4/16	4/16	4/16	4/16	4/16	4/16	4/16
Refrigerant Control	TXV	TXV	TXV	TXV	TXV	TXV	TXV	TXV	TXV	TXV	TXV	TXV
Drain Connection No./Size (in.) NPT	1/0.75	1/0.75	1/0.75	1/0.75	1/0.75	1/0.75	1/0.75	1/1.0	1/1.0	1/1.0	1/1.0	1/1.0
Reheat Coil												
Type	RTPF Lanced	RTPF Lanced	RTPF Lanced	RTPF Lanced	RTPF Lanced	RTPF Lanced	RTPF Lanced	RTPF Lanced	RTPF Lanced	RTPF Lanced	RTPF Lanced	RTPF Lanced
Configuration	Full Face	Full Face	Full Face	Full Face	Full Face	Full Face	Full Face	Full Face	Full Face	Full Face	Full Face	Full Face
Tube Size (in.)	0.313	0.313	0.313	0.313	0.313	0.313	0.313	0.313	0.313	0.313	0.313	0.313
Face Area (sq. ft.)	11.49	11.49	11.49	11.49	11.49	11.49	14.13	25.83	25.83	25.83	25.83	25.83
Rows/FPI (Fins per inch)	1/16	1/16	1/16	1/16	1/16	1/16	1/16	1/16	1/16	1/16	1/16	1/16
Outdoor Fan												
Type	Propeller	Propeller	Propeller	Propeller	Propeller	Propeller	Propeller	Propeller	Propeller	Propeller	Propeller	Propeller
No. Used/Diameter (in.)	1/26	1/26	1/26	1/26	1/26	1/26	1/30	2/26	2/26	2/28	2/28	2/28
Drive Type/No. Speeds	Direct/1	Direct/1	Direct/1	Direct/1	Direct/1	Direct/1	Direct/1	Direct/1	Direct/1	Direct/1	Direct/1	Direct/1
CFM/ CFM-Modulating HGRH	3880	4790	4790	5900	7200	7200	8200	13450	13450	15810	15810	15810
Motor HP/ Motor HP Modulating HGRH	0.25/0.33	0.4/0.5	0.4/0.5	0.70/0.75	0.75	0.75	0.75 - 230V, 460V 1.0 - 575V	1.00	1.00	1.00	1.00	1.00
Motor RPM/Motor RPM Modulating HGRH	1120	1110	1110	1100	1100	1100	1100	1125	1125	1125	1125	1125
Indoor Fan												
Type	BC Plenum	BC Plenum	BC Plenum	BC Plenum	BC Plenum	BC Plenum	BC Plenum	BC Plenum	BC Plenum	BC Plenum	BC Plenum	BC Plenum
No. Used/Diameter (in.)/ Width (in.)	1/23x6	1/23x6	1/23x6	1/23x6	1/23x6	1/23x6	1/23x6	2/23x6	2/23x6	2/23x6	2/23x6	2/23x6
Drive Type/No. Speeds/RPM	Direct / Variable	Direct / Variable	Direct / Variable	Direct / Variable	Direct / Variable	Direct / Variable	Direct / Variable	Direct / Variable	Direct / Variable	Direct / Variable	Direct / Variable	Direct / Variable
Motor HP (Standard/ Oversized)	2.9 / -	2.9 / -	2.9 / -	2.9 / -	2.9 / -	2.9 / -	4.2/-	2.9 / –	2.9 / –	2.9 / –	2.9 / –	2.9 / 4.2
Max Motor RPM	1850	1850	1850	1850	1850	1850	1940	1850	1850	1850	1850	1850 / 1940

Table 7. General data — high efficiency — heat pump (continued)

	3 Tons	4 Tons	5 Tons	6 Tons	7.5 Tons	8.5 Tons	10 Tons	12.5 Tons	15 Tons	17.5 Tons	20 Tons	25 Tons
	WHK036	WHK048	WHK060	WHK072	WHK090	WHK102	WHK120	WHK150	WHK180	WHK210	WHK240	WHK300
Filters[i]												
Type Furnished	Throwaway	Throwaway	Throwaway	Throwaway	Throwaway	Throwaway	Throwaway	Throwaway	Throwaway	Throwaway	Throwaway	Throwaway
Number Size Recommended	(2) 18x24x2 (3) 24x16x2	(2) 18x24x2 (3) 24x16x2	(2) 18x24x2 (3) 24x16x2	(2) 18x24x2 (3) 24x16x2	(2) 18x24x2 (3) 24x16x2	(2) 18x24x2 (3) 24x16x2	(3) 18x18x2 (3) 24x18x2	(8) 20x24x2	(8) 20x24x2	(8) 20x24x2	(4) 20x24x2 (4) 20x30x2	(4) 20x24x2 (4) 20x30x2
Refrigerant Charge												
lbs of R-454B	12.0	13.0	13.0	15.2	15.5	16.5	21.5	31.5	32.0	31.0	38.0	35.0
lbs of R-454B, Hot Gas Reheat	12.7	13.7	13.7	16.8	17.0	18.0	24.9	35.0	33.0	33.0	42.0	36.0
Cabinet												
Cabinet Size	B0	B0	B0	B0	B0	B0	C0	D0	D0	D0	D1	D1

(a) The 3 to 5 ton cooling performance is rated at 95°F ambient, 80°F entering dry bulb, 67°F entering wet bulb. Gross capacity does not include the effect of fan motor heat. AHRI capacity is net and includes the effect of fan motor heat. Units are suitable for operation to ±20% of nominal cfm. Units are certified in accordance with the Unitary Air-Conditioner Equipment certification program, which is based on AHRI Standard 210/240.

(b) SEER shown for 3 to 5 ton units only. 3 to 5T EER and SEER are rated at AHRI conditions and calculated in accordance with AHRI Standard 210/240-2017. Airflow and net cooling capacity not shown.

(c) EER2 and SEER2 shown for 3 to 5 ton units only. EER2 and SEER2 are rated at AHRI conditions and certified in accordance with AHRI Standard 210/240-2023.

(d) IEER shown for 6 to 25 ton units only.

(e) The 3 to 5 ton heating performance is rated at 47°F ambient with 43°F wet bulb, 70°F entering dry bulb, 60°F entering wet bulb. High temp Btuh rating includes the effect of fan motor heat. Units are suitable for operation to ±20% of nominal cfm. Units are certified in accordance with the Unitary Air-Conditioner Equipment certification program, which is based on AHRI Standard 210/240.

(f) COP2 shown for 3 to 5 ton units only.

(g) HSPF is rated at AHRI conditions and calculated in accordance with AHRI Standard 210/240-2017. Airflow and heating capacities not shown.

(h) HSPF2 is rated at AHRI conditions and certified in accordance with AHRI Standard 210/240-2023.

(i) Outdoor sound rating shown is tested in accordance with AHRI 370-2015. For additional information reference the outdoor sound power level data in the performance section.

Table 8. General data — standard efficiency — dual fuel

	3 Tons	4 Tons	5 Tons	6 Tons	7.5 Tons	8.5 Tons	10 Tons	12.5 Tons	15 Tons	17.5 Tons	20 Tons	25 Tons
	DSK036	DSK048	DSK060	DSK072	DSK090	DSK102	DSK120	DSK150	DSK180	DSK210	DSK240	DSK300
Cooling Performance[a]												
Gross Cooling Capacity	38000	51000	60500	77000	90000	108000	121000	153000	181000	211000	246000	267000
EER[b] / EER2[c]	12.0/11.0	12.0/11.0	11.9/11.0	10.8	10.8	10.8	10.8	10.4	10.4	10.4	9.3	9.3
Nominal cfm/AHRI Rated cfm	1200/1200	1600/1600	2000/2000	2400/2400	3000/3000	3400/3400	4000/4000	5000/5000	6000/5250	7000/7000	8000/8000	10000/8750
AHRI Net Cooling Capacity	37000	49500	58500	76000	88000	106000	117000	150000	178000	206000	240000	260000
IEER[d] (2-Speed) / SEER[b]/ SEER2[c]	14.3/13.4	14.3/13.4	14.0/13.4	13.9	13.9	13.9	13.9	13.3	13.3	13.3	12.3	12.3
IEER (SZVAV/MZVAV)	—	—	—	14.4/14.4	14.4/14.4	14.4/14.4	14.4/14.4	13.8/13.8	13.8/13.8	13.8/13.8	12.8/12.8	12.8/12.8
System Power (kW)	3.36	4.50	5.32	7.04	8.15	9.81	10.83	14.42	17.12	19.81	25.81	27.96
Cooling Performance with Modulating Gas												
Gross Cooling Capacity	—	—	—	74000	86000	103000	118000	153000	181000	212000	248000	267000
EER	—	—	—	10.8	10.8	10.8	10.8	10.4	10.4	10.4	9.3	9.3
Nominal cfm/AHRI Rated cfm	—	—	—	2400/1860	3000/2325	3400/2635	4000/3100	5000/5000	6000/5250	7000/7000	8000/8000	10000/8750
AHRI Net Cooling Capacity	—	—	—	73000	84000	101000	114000	150000	178000	206000	240000	258000
IEER[d] (2-Speed)	—	—	—	13.9	13.9	13.9	13.9	13.3	13.3	13.3	12.3	12.3
IEER (SZVAV/MZVAV)	—	—	—	14.4/14.4	14.4/14.4	14.4/14.4	14.4/14.4	13.8/13.8	13.8/13.8	13.8/13.8	12.8/12.8	12.8/12.8
System Power (kW)	—	—	—	6.76	7.78	9.35	10.55	14.42	17.12	19.81	25.81	27.74
Heating Performance[e]												
High Temp Btuh Rating	31000	43000	51000	69000	82000	97000	105000	133000	160000	190000	218000	238000
System Power (kW) / COP / COP2[f]	2.61/3.50/ 3.48	3.60/3.50/ 3.50	4.30/3.50/ 3.48	5.95/3.40	7.07/3.40	8.36/3.40	9.05/3.40	11.81/3.3	14.21/3.3	16.87/3.3	19.96/3.2	21.79/3.2
Low Temp Btuh Rating	16500	24400	29600	38000	45000	55000	63000	82000	96000	104000	122000	126000
System Power (kW) / COP / COP2[f]	2.44/2.04/ 1.98	3.31/2.20/ 2.16	4.02/2.20/ 2.16	4.95/2.25	5.86/2.25	7.16/2.25	8.20/2.25	11.72/2.05	13.72/2.05	14.86/2.05	17.44/2.05	18.01/2.05
HSPF[g] / HSPF2[h]	8.0/6.7	8.2/6.7	8.2/6.7	—	—	—	—	—	—	—	—	—
Heating Performance with Modulating Gas												
High Temp Btuh Rating	—	—	—	67000	80000	96000	102000	133000	160000	190000	218000	238000
System Power (kW) / COP	—	—	—	5.77/3.40	6.89/3.40	8.27/3.40	8.79/3.40	11.81/3.3	14.21/3.3	16.87/3.3	19.96/3.2	21.79/3.2
Low Temp Btuh Rating	—	—	—	38000	45000	55000	63000	82000	96000	104000	122000	126000
System Power (kW) / COP	—	—	—	4.95/2.25	5.86/2.25	7.16/2.25	8.20/2.25	11.72/2.05	13.72/2.05	14.86/2.05	17.44/2.05	18.01/2.05

Table 8. General data — standard efficiency — dual fuel (continued)

	3 Tons	4 Tons	5 Tons	6 Tons	7.5 Tons	8.5 Tons	10 Tons	12.5 Tons	15 Tons	17.5 Tons	20 Tons	25 Tons
	DSK036	DSK048	DSK060	DSK072	DSK090	DSK102	DSK120	DSK150	DSK180	DSK210	DSK240	DSK300
Compressor												
Number/Type	1/Scroll	1/Scroll	1/Scroll	2/Manifold Scroll	2/Manifold Scroll	2/Manifold Scroll	2/Manifold Scroll	2/Manifold Scroll	2/Manifold Scroll	2/Manifold Scroll	2/Manifold Scroll	2/Manifold Scroll
Percent Capacity (Stage 1 - Stage 4)	100	100	100	34/66/100	33/67/100	32/68/100	28/72/100	32/68/100	33/67/100	33/67/100	24/36/64/ 100	25/37/63/ 100
Sound												
Outdoor Sound Rating (dBA)	79	82	82	86	86	86	89	87	87	91	93	93
Outdoor Coil												
Type	RTPF Lanced	RTPF Lanced	RTPF Lanced	RTPF Lanced	RTPF Lanced	RTPF Lanced	RTPF Lanced	RTPF Lanced	RTPF Lanced	RTPF Lanced	RTPF Lanced	RTPF Lanced
Configuration	Full Face	Full Face	Full Face	Full Face	Full Face	Full Face	Full Face	Full Face	Full Face	Full Face	Full Face	Full Face
Tube Size (in.)	0.313	0.313	0.313	0.313	0.313	0.313	0.313	0.313	0.313	0.313	0.313	0.313
Face Area (sq. ft.)	11.20	11.20	11.20	19.60	19.60	23.57	23.97	34.71	34.71	34.71	40.05	40.05
Rows/FPI (Fins per inch)	2/16	3/16	3/16	3/16	3/16	3/16	4/16	3/16	3/16	3/16	3/16	3/16
Refrigerant Control	TXV	TXV	TXV	TXV	TXV	TXV	TXV	TXV	TXV	TXV	TXV	TXV
Indoor Coil												
Type	RTPF Lanced	RTPF Lanced	RTPF Lanced	RTPF Lanced	RTPF Lanced	RTPF Lanced	RTPF Lanced	RTPF Lanced	RTPF Lanced	RTPF Lanced	RTPF Lanced	RTPF Lanced
Configuration	Full Face	Full Face	Full Face	Full Face	Full Face	Full Face	Full Face	Full Face	Full Face	Full Face	Full Face	Full Face
Tube Size (in.)	0.313	0.313	0.313	0.313	0.313	0.313	0.313	0.313	0.313	0.313	0.313	0.313
Face Area (sq. ft.)	8.74	8.74	10.28	12.68	12.68	12.68	15.60	25.83	25.83	25.83	30.09	30.09
Rows/FPI (Fins per inch)	3/16	3/16	3/16	4/16	4/16	4/16	4/16	4/16	4/16	4/16	4/16	4/16
Refrigerant Control	TXV	TXV	TXV	TXV	TXV	TXV	TXV	TXV	TXV	TXV	TXV	TXV
Drain Connection No./Size (in.) NPT	1/0.75	1/0.75	1/0.75	1/0.75	1/0.75	1/0.75	1/0.75	1/1.0	1/1.0	1/1.0	1/1.0	1/1.0
Reheat Coil												
Type	RTPF Lanced	RTPF Lanced	RTPF Lanced	RTPF Lanced	RTPF Lanced	RTPF Lanced	RTPF Lanced	RTPF Lanced	RTPF Lanced	RTPF Lanced	RTPF Lanced	RTPF Lanced
Configuration	Full Face	Full Face	Full Face	Full Face	Full Face	Full Face	Full Face	Full Face	Full Face	Full Face	Full Face	Full Face
Tube Size (in.)	0.313	0.313	0.313	0.313	0.313	0.313	0.313	0.313	0.313	0.313	0.313	0.313
Face Area (sq. ft.)	7.19	7.19	7.19	11.49	11.49	11.49	14.13	25.83	25.83	25.83	25.83	25.83
Rows/FPI (Fins per inch)	1/16	1/16	1/16	1/16	1/16	1/16	1/16	1/16	1/16	1/16	1/16	1/16

Table 8. General data — standard efficiency — dual fuel (continued)

	3 Tons	4 Tons	5 Tons	6 Tons	7.5 Tons	8.5 Tons	10 Tons	12.5 Tons	15 Tons	17.5 Tons	20 Tons	25 Tons
	DSK036	DSK048	DSK060	DSK072	DSK090	DSK102	DSK120	DSK150	DSK180	DSK210	DSK240	DSK300
Outdoor Fan												
Type	Propeller	Propeller	Propeller	Propeller	Propeller	Propeller	Propeller	Propeller	Propeller	Propeller	Propeller	Propeller
No. Used/Diameter (in.)	1/22	1/22	1/22	1/26	1/26	1/26	1/30	2/26	2/26	2/28	2/28	2/28
Drive Type/No. Speeds	Direct/1	Direct/1	Direct/1	Direct/1	Direct/1	Direct/1	Direct/1	Direct/1	Direct/1	Direct/1	Direct/1	Direct/1
CFM	3500	3800	3800	5900	7200	7200	8200	13450	13450	15810	15810	15810
Motor HP/ Motor HP Modulating HGRH	0.25	0.33	0.33	0.70/0.75	0.70/0.75	0.75	0.75 - 230V, 460V 1.0 - 575V	1.00	1.00	1.00	1.00	1.00
Motor RPM	1100	1100	1100	1100	1100	1100	1100	1125	1125	1125	1125	1125
Indoor Fan												
Type	FC Centrifugal	FC Centrifugal	FC Centrifugal	BC Plenum	BC Plenum	BC Plenum	BC Plenum	BC Plenum	BC Plenum	BC Plenum	BC Plenum	BC Plenum
No. Used/Diameter (in.)/ Width (in.)	1/11X11	1/11X11	1/11X11	1/23x6	1/23x6	1/23x6	1/23x6	2/23x6	2/23x6	2/23x6	2/23x6	2/23x6
Drive Type/No. Speeds/RPM	Direct/5	Direct/5	Direct/5	Direct / Variable	Direct / Variable	Direct / Variable	Direct / Variable	Direct / Variable	Direct / Variable	Direct / Variable	Direct / Variable	Direct / Variable
Motor HP (Standard/ Oversized)	0.75 (1.0)[i] /1.5	1.0/1.5	1.0/1.5	2.9 / –	2.9 / –	2.9 / –	4.2 / –	2.9 / –	2.9 / –	2.9 / 4.2[j]	2.9 / 4.2[j]	2.9 / 4.2
Max Motor RPM	1200/1400	1200/1400	1200/1400	1850	1850	1850	1940	1850	1850	1850 / 1940 [j]	1850 / 1940 [j]	1850 / 1940
Filters[k]												
Type Furnished	Throwaway	Throwaway	Throwaway	Throwaway	Throwaway	Throwaway	Throwaway	Throwaway	Throwaway	Throwaway	Throwaway	Throwaway
Number Size Recommended	(4) 20x20x2	(4) 20x20x2	(4) 20x20x2	(2) 18x24x2 (3) 24x16x2	(2) 18x24x2 (3) 24x16x2	(2) 18x24x2 (3) 24x16x2	(3) 18x18x2 (3) 24x18x2	(8) 20x24x2	(8) 20x24x2	(8) 20x24x2	(4) 20x24x2 (4) 20x30x2	(4) 20x24x2 (4) 20x30x2
Refrigerant Charge												
lbs of R-454B	6.1	7.9	8.0	15.2	15.5	16.5	21.5	31.5	32.0	31.0	38.0	35.0
lbs of R-454B, Hot Gas Reheat	6.6	8.6	8.5	16.8	17.0	18.0	24.9	35.0	33.0	33.0	42.0	36.0
Heating Performance (Gas/Electric Only)												
Heating Input: Staged												
Low Heat Input (Btu) (High/ Low Stage)	80,000/ 56,000	80,000/ 56,000	80,000/ 56,000	80,000/ 56,000	120,000/ 84,000	120,000/84,000	150,000/ 105,000	150,000/ 105,000	250,000/ 175,000	250,000/ 175,000	250,000/ 175,000	250,000/ 175,000
Mid Heat Input (Btu) (High/ Low Stage)	100,000/ 70,000	100,000/ 70,000	100,000/ 70,000	120,000/ 84,000	150,000/ 105,000	150,000/105,000	200,000/ 140,000	200,000/ 140,000	320,000/ 224,000	320,000/ 224,000	320,000/ 224,000	320,000/ 224,000
High Heat Input (Btu) (High/ Low Stage)	120,000/ 84,000	130,000/ 91,000	150,000/ 105,000	150,000/ 105,000	200,000/ 140,000	200,000/140,000	250,000/ 175,000	250,000/ 175,000	400,000/ 280,000	400,000/ 280,000	400,000/ 280,000	400,000/ 280,000

Table 8. General data — standard efficiency — dual fuel (continued)

	3 Tons	4 Tons	5 Tons	6 Tons	7.5 Tons	8.5 Tons	10 Tons	12.5 Tons	15 Tons	17.5 Tons	20 Tons	25 Tons
	DSK036	DSK048	DSK060	DSK072	DSK090	DSK102	DSK120	DSK150	DSK180	DSK210	DSK240	DSK300
Heating Output: Staged												
Low Heat Input (Btu) (High/ Low Stage)	64,800/ 45,300	64,8000/ 45,300	64,800/ 45,300	64,800/ 45,300	97,200/ 68,000	97,200/68,000	121,500/85,000	121,500/ 85,000	202,500/ 141,750	202,500/ 141,750	202,500/ 141,750	202,500/ 141,750
Mid Heat Input (Btu) (High/ Low Stage)	81,000/ 56,700	81,000/ 56,700	81,000/ 56,700	97,200/ 68,000	121,500/ 85,000	121,500/85,100	162,000/113,400	162,000/ 113,400	259,200/ 181,440	259,200/ 181,440	259,200/ 181,440	259,200/ 181,440
High Heat Input (Btu) (High/ Low Stage)	97,200/ 68,000	105,300/ 73,700	121,500/ 85,100	121,500/ 85,000	162,000/ 113,400	162,000/113,400	194,400/ 136,000	202,500/ 141,750	324,000/ 226,800	324,000/ 226,800	324,000/ 226,800	324,000/ 226,800
Heating Input: Modulating												
Low Heat Input (Btu) (Maximum/Minimum)	—	—	—	80,000/ 8,000	—	120,000/12,000	150,000/15,000	—	250,000/ 25,000	250,000/ 25,000	250,000/ 25,000	250,000/ 25,000
High Heat Input (Btu) (Maximum/Minimum)	—	—	—	—	200,000/ 20,000	200,000/20,000	250,000/25,000	250,000/ 25,000	400,000/ 40,000	400,000/ 40,000	400,000/ 40,000	—
Heating Output: Modulating												
Low Heat Input (Btu) (Maximum/Minimum)	—	—	—	64,800/ 6,480	—	97,200/9,720	121,500/12,150	—	202,500/ 20,250	202,500/ 20,250	202,500/ 20,250	202,500/ 20,250
High Heat Input (Btu) (Maximum/Minimum)	—	—	—	—	162,000/ 16,200	162,000/16,200	202,500/20,250	202,500/ 20,250	324,000/ 32,400	324,000/ 32,400	324,000/ 32,400	—
Steady State Efficiency %												
Low Heat Input	81	81	81	81	81	81	81	81	81	81	81	81
Mid Heat Input	81	81	81	81	81	81	81	81	81	81	81	81
High Heat Input	81	81	81	81	81	81	81	81	81	81	81	81
No. Burners: Staged												
Low Heat Input	2	2	2	3	3	3	4	5	5	5	5	5
Mid Heat Input	3	3	3	3	4	4	4	5	7	7	7	7
High Heat Input	4	4	4	4	6	6	6	7	8	8	8	8
No. Burners: Modulating												
Low Heat Input	—	—	—	2	—	4	4	—	6	6	6	6
High Heat Input	—	—	—	—	6	6	6	6	8	8	8	—
No. Stages												
Low Heat Input	2	2	2	2	2	2	2	2	2	2	2	2
Mid Heat Input	2	2	2	2	2	2	2	2	2	2	2	2
High Heat Input	2	2	2	2	2	2	2	2	2	2	2	2
Gas Supply Line Pressure (InWC)												

Table 8. General data — standard efficiency — dual fuel (continued)

	3 Tons	4 Tons	5 Tons	6 Tons	7.5 Tons	8.5 Tons	10 Tons	12.5 Tons	15 Tons	17.5 Tons	20 Tons	25 Tons
	DSK036	DSK048	DSK060	DSK072	DSK090	DSK102	DSK120	DSK150	DSK180	DSK210	DSK240	DSK300
Natural (minimum/maximum) Low Heat	4.5/14.0	4.5/14.0	4.5/14.0	4.5/14.0	4.5/14.0	4.5/14.0	4.5/14.0	4.5/14.0	4.5/14.0	4.5/14.0	4.5/14.0	4.5/14.0
Natural (minimum/maximum) Mid Heat	4.5/14.0	4.5/14.0	4.5/14.0	4.5/14.0	4.5/14.0	4.5/14.0	4.5/14.0	4.5/14.0	4.5/14.0	4.5/14.0	4.5/14.0	4.5/14.0
Natural (minimum/maximum) High Heat	4.5/14.0	4.5/14.0	4.5/14.0	4.5/14.0	4.5/14.0	4.5/14.0	4.5/14.0	4.5/14.0	6.0/14.0	6.0/14.0	6.0/14.0	6.0/14.0
LP (minimum/maximum)	11.5/14.0	11.5/14.0	11.5/14.0	11.5/14.0	11.5/14.0	11.5/14.0	11.5/14.0	11.5/14.0	11.5/14.0	11.5/14.0	11.5/14.0	11.5/14.0
Gas Connection Pipe Size (in.)												
Low Heat	1/2	1/2	1/2	1/2	3/4	3/4	3/4	3/4	3/4	3/4	3/4	3/4
Mid Heat	1/2	1/2	1/2	3/4	3/4	3/4	3/4	3/4	3/4	3/4	3/4	3/4
High Heat	3/4	3/4	3/4	3/4	3/4	3/4	3/4	3/4	3/4	3/4	3/4	3/4
Cabinet												
Cabinet Size	A0	A0	A0	B0	B0	B0	C0	D0	D0	D0	D1	D1

(a) The 3 to 5 ton cooling performance is rated at 95°F ambient, 80°F entering dry bulb, 67°F entering wet bulb. Gross capacity does not include the effect of fan motor heat. AHRI capacity is net and includes the effect of fan motor heat. Units are suitable for operation to ±20% of nominal cfm. Units are certified in accordance with the Unitary Air-Conditioner Equipment certification program, which is based on AHRI Standard 210/240.

(b) SEER shown for 3 to 5 ton units only. 3 to 5T EER and SEER are rated at AHRI conditions and calculated in accordance with AHRI Standard 210/240-2017. Airflow and net cooling capacity not shown.

(c) EER2 and SEER2 shown for 3 to 5 ton units only. EER2 and SEER2 are rated at AHRI conditions and certified in accordance with AHRI Standard 210/240-2023.

(d) IEER shown for 6 to 25 ton units only.

(e) The 3 to 5 ton heating performance is rated at 47°F ambient with 43°F wet bulb, 70°F entering dry bulb, 60°F entering wet bulb. High temp Btuh rating includes the effect of fan motor heat. Units are suitable for operation to ±20% of nominal cfm. Units are certified in accordance with the Unitary Air-Conditioner Equipment certification program, which is based on AHRI Standard 210/240.

(f) COP2 shown for 3 to 5 ton units only.

(g) HSPF is rated at AHRI conditions and calculated in accordance with AHRI Standard 210/240-2017. Airflow and heating capacities not shown.

(h) HSPF2 is rated at AHRI conditions and certified in accordance with AHRI Standard 210/240-2023.

(i) WSK036 uses 1HP as standard motor for 575V application.

(j) For 17.5 to 20 ton, the oversized motor is only offered on units with optional modulating gas heat.

(k) Outdoor sound rating shown is tested in accordance with AHRI 370-2015. For additional information reference the outdoor sound power level data in the performance section.

Table 9. General data — high efficiency — dual fuel

	3 Tons	4 Tons	5 Tons	6 Tons	7.5 Tons	8.5 Tons	10 Tons	12.5 Tons	15 Tons	17.5 Tons	20 Tons	25 Tons
	DHK036	DHK048	DHK060	DHK072	DHK090	DHK102	DHK120	DHK150	DHK180	DHK210	DHK240	DHK300
Cooling Performance[a]												
Gross Cooling Capacity	36700	50000	61300	77000	90000	108000	121000	153000	181000	211000	246000	267000
EER[b] / EER2[c]	13.6/12.8	13.6/12.8	13.6/12.8	12.6	11.8	11.9	11.1	11.9	11.5	11.1	10.8	9.9
Nominal cfm/AHRI Rated cfm	1200/1200	1600/1600	2000/2000	2400/2400	3000/3000	3400/3400	4000/4000	5000/5000	6000/5250	7000/7000	8000/8000	10000/8750
AHRI Net Cooling Capacity	36000	49000	60000	76000	88000	106000	117000	150000	178000	206000	240000	260000
IEER[d] (2-Speed) / SEER[b]/ SEER2[c]	16.8/16.2	16.8/16.2	16.4/15.8	16.1	15.3	16.8	15.9	16.5	16.5	15.9	16.1	15.1
IEER (SZVAV/MZVAV)	—	—	—	16.6/16.6	15.8/15.8	17.3/17.3	16.4/16.4	17.0/17.0	17.0/17.0	16.4/16.4	16.6/16.6	15.6/15.6
System Power (kW)	2.81	3.83	4.69	6.03	7.46	8.91	10.54	12.61	15.48	18.56	22.22	26.26
Cooling Performance with Modulating Gas												
Gross Cooling Capacity	—	—	—	74000	86000	103000	118000	153000	181000	212000	248000	267000
EER	—	—	—	12.3	11.4	11.1	11.1	11.8	11.4	10.9	10.4	9.4
Nominal cfm/AHRI Rated cfm	—	—	—	2400/1860	3000/2325	3400/2635	4000/3100	5000/5000	6000/5250	7000/7000	8000/8000	10000/8750
AHRI Net Cooling Capacity	—	—	—	73000	84000	101000	114000	150000	178000	206000	240000	258000
IEER[d] (2-Speed)	—	—	—	15.3	14.6	15.9	15.9	16.5	16.5	15.8	15.9	14.7
IEER (SZVAV/MZVAV)	—	—	—	15.8/15.8	15.1/15.1	16.4/16.4	16.4/16.4	17.0/17.0	17.0/17.0	16.3/16.3	16.4/16.4	15.2/15.2
System Power (kW)	—	—	—	5.94	7.37	9.10	10.27	12.71	15.61	18.90	22.98	27.45
Heating Performance[e]												
High Temp Btuh Rating	32400	43000	53500	69000	82000	97000	105000	133000	160000	190000	218000	238000
System Power (kW) / COP / COP2[f]	2.50/3.80/ 3.80	3.32/3.80/ 3.74	4.13/3.80/ 3.74	5.49/3.68	6.58/3.65	7.68/3.70	8.79/3.50	10.98/3.55	12.92/3.6	15.68/3.55	18.25/3.5	20.5/3.4
Low Temp Btuh Rating	19200	25600	33400	38000	45000	55000	63000	82000	96000	104000	122000	126000
System Power (kW) / COP / COP2[f]	2.32/2.46/ 2.42	3.10/2.46/ 2.42	3.98/2.46/ 2.46	4.95/2.25	5.86/2.25	7.16/2.25	8.20/2.25	10.63/2.26	12.45/2.26	13.85/2.2	15.89/2.25	18.01/2.05
HSPF[g] / HSPF2[h]	8.5/7.2	8.5/7.2	8.5/7.2	—	—	—	—	—	—	—	—	—
Heating Performance with Modulating Gas												
High Temp Btuh Rating	—	—	—	67000	80000	96000	102000	133000	160000	190000	218000	238000
System Power (kW) / COP	—	—	—	5.91/3.42	6.96/3.45	8.24/3.45	8.79/3.40	10.98/3.55	12.92/3.6	15.91/3.5	18.79/3.4	21.1/3.3
Low Temp Btuh Rating	—	—	—	38000	45000	55000	63000	82000	96000	104000	122000	126000

Table 9. General data — high efficiency — dual fuel (continued)

	3 Tons	4 Tons	5 Tons	6 Tons	7.5 Tons	8.5 Tons	10 Tons	12.5 Tons	15 Tons	17.5 Tons	20 Tons	25 Tons
	DHK036	DHK048	DHK060	DHK072	DHK090	DHK102	DHK120	DHK150	DHK180	DHK210	DHK240	DHK300
System Power (kW) / COP	—	—	—	4.95/2.25	5.86/2.25	7.16/2.25	8.20/2.25	10.63/2.26	12.45/2.26	13.85/2.2	15.89/2.25	18.01/2.05
Compressor												
Number/Type	1/Scroll	1/Scroll	1/Scroll	2/Manifold Scroll	2/Manifold Scroll	2/Manifold Scroll	2/Manifold Scroll	2/Manifold Scroll	2/Manifold Scroll	2/Manifold Scroll	2/Manifold Scroll	2/Manifold Scroll
Percent Capacity (Stage 1 - Stage 4)	67/100	67/100	67/100	34/66/100	33/67/100	32/68/100	28/72/100	32/68/100	33/67/100	33/67/100	24/36/64/ 100	25/37/63/ 100
Sound												
Outdoor Sound Rating (dBA)	85	88	88	86	86	86	89	87	87	91	93	93
Outdoor Coil												
Type	RTPF Lanced	RTPF Lanced	RTPF Lanced	RTPF Lanced	RTPF Lanced	RTPF Lanced	RTPF Lanced	RTPF Lanced	RTPF Lanced	RTPF Lanced	RTPF Lanced	RTPF Lanced
Configuration	Full Face	Full Face	Full Face	Full Face	Full Face	Full Face	Full Face	Full Face	Full Face	Full Face	Full Face	Full Face
Tube Size (in.)	0.313	0.313	0.313	0.313	0.313	0.313	0.313	0.313	0.313	0.313	0.313	0.313
Face Area (sq. ft.)	19.60	19.60	19.60	19.60	19.60	23.57	23.97	34.71	34.71	34.71	40.05	40.05
Rows/FPI (Fins per inch)	3/16	3/16	3/16	3/16	3/16	3/16	4/16	3/16	3/16	3/16	3/16	3/16
Refrigerant Control	TXV	TXV	TXV	TXV	TXV	TXV	TXV	TXV	TXV	TXV	TXV	TXV
Indoor Coil												
Type	RTPF Lanced	RTPF Lanced	RTPF Lanced	RTPF Lanced	RTPF Lanced	RTPF Lanced	RTPF Lanced	RTPF Lanced	RTPF Lanced	RTPF Lanced	RTPF Lanced	RTPF Lanced
Configuration	Full Face	Full Face	Full Face	Full Face	Full Face	Full Face	Full Face	Full Face	Full Face	Full Face	Full Face	Full Face
Tube Size (in.)	0.313	0.313	0.313	0.313	0.313	0.313	0.313	0.313	0.313	0.313	0.313	0.313
Face Area (sq. ft.)	12.68	12.68	12.68	12.68	12.68	12.68	15.60	25.83	25.83	25.83	30.09	30.09
Rows/FPI (Fins per inch)	3/16	3/16	3/16	4/16	4/16	4/16	4/16	4/16	4/16	4/16	4/16	4/16
Refrigerant Control	TXV	TXV	TXV	TXV	TXV	TXV	TXV	TXV	TXV	TXV	TXV	TXV
Drain Connection No./Size (in.) NPT	1/0.75	1/0.75	1/0.75	1/0.75	1/0.75	1/0.75	1/0.75	1/1.0	1/1.0	1/1.0	1/1.0	1/1.0
Reheat Coil												
Type	RTPF Lanced	RTPF Lanced	RTPF Lanced	RTPF Lanced	RTPF Lanced	RTPF Lanced	RTPF Lanced	RTPF Lanced	RTPF Lanced	RTPF Lanced	RTPF Lanced	RTPF Lanced
Configuration	Full Face	Full Face	Full Face	Full Face	Full Face	Full Face	Full Face	Full Face	Full Face	Full Face	Full Face	Full Face
Tube Size (in.)	0.313	0.313	0.313	0.313	0.313	0.313	0.313	0.313	0.313	0.313	0.313	0.313

Table 9. General data — high efficiency — dual fuel (continued)

	3 Tons	4 Tons	5 Tons	6 Tons	7.5 Tons	8.5 Tons	10 Tons	12.5 Tons	15 Tons	17.5 Tons	20 Tons	25 Tons
	DHK036	DHK048	DHK060	DHK072	DHK090	DHK102	DHK120	DHK150	DHK180	DHK210	DHK240	DHK300
Face Area (sq. ft.)	11.49	11.49	11.49	11.49	11.49	11.49	14.13	25.83	25.83	25.83	25.83	25.83
Rows/FPI (Fins per inch)	1/16	1/16	1/16	1/16	1/16	1/16	1/16	1/16	1/16	1/16	1/16	1/16
Outdoor Fan												
Type	Propeller	Propeller	Propeller	Propeller	Propeller	Propeller	Propeller	Propeller	Propeller	Propeller	Propeller	Propeller
No. Used/Diameter (in.)	1/26	1/26	1/26	1/26	1/26	1/26	1/30	2/26	2/26	2/28	2/28	2/28
Drive Type/No. Speeds	Direct/1	Direct/1	Direct/1	Direct/1	Direct/1	Direct/1	Direct/1	Direct/1	Direct/1	Direct/1	Direct/1	Direct/1
CFM/ CFM-Modulating HGRH	3880	4790	4790	5900	7200	7200	8200	13450	13450	15810	15810	15810
Motor HP/ Motor HP Modulating HGRH	0.25/0.33	0.4/0.5	0.4/0.5	0.70/0.75	0.70/0.75	0.75	0.75 - 230V, 460V 1.0 - 575V	1.00	1.00	1.00	1.00	1.00
Motor RPM/Motor RPM Modulating HGRH	1120	1110	1110	1100	1100	1100	1100	1125	1125	1125	1125	1125
Indoor Fan												
Type	BC Plenum	BC Plenum	BC Plenum	BC Plenum	BC Plenum	BC Plenum	BC Plenum	BC Plenum	BC Plenum	BC Plenum	BC Plenum	BC Plenum
No. Used/Diameter (in.)/ Width (in.)	1/23x6	1/23x6	1/23x6	1/23x6	1/23x6	1/23x6	1/23x6	2/23x6	2/23x6	2/23x6	2/23x6	2/23x6
Drive Type/No. Speeds/RPM	Direct / Variable	Direct / Variable	Direct / Variable	Direct / Variable	Direct / Variable	Direct / Variable	Direct / Variable	Direct / Variable	Direct / Variable	Direct / Variable	Direct / Variable	Direct / Variable
Motor HP (Standard/ Oversized)	2.9 / -	2.9 / -	2.9 / -	2.9 / -	2.9 / -	2.9 / -	4.2 / -	2.9 / –	2.9 / –	2.9 / 4.2(i)	2.9 / 4.2(i)	2.9 / 4.2
Max Motor RPM	1850	1850	1850	1850	1850	1850	1940	1850	1850	1850 / 1940 (i)	1850 / 1940 (i)	1850 / 1940
Filters(i)												
Type Furnished	Throwaway	Throwaway	Throwaway	Throwaway	Throwaway	Throwaway	Throwaway	Throwaway	Throwaway	Throwaway	Throwaway	Throwaway
Number Size Recommended	(2) 18x24x2 (3) 24x16x2	(2) 18x24x2 (3) 24x16x2	(2) 18x24x2 (3) 24x16x2	(2) 18x24x2 (3) 24x16x2	(2) 18x24x2 (3) 24x16x2	(2) 18x24x2 (3) 24x16x2	(3) 18x18x2 (3) 24x18x2	(8) 20x24x2	(8) 20x24x2	(8) 20x24x2	(4) 20x24x2 (4) 20x30x2	(4) 20x24x2 (4) 20x30x2
Refrigerant Charge												
lbs of R-454B	12.0	13.0	13.0	15.2	15.5	16.5	21.5	31.5	32.0	31.0	38.0	35.0
lbs of R-454B, Hot Gas Reheat	12.7	13.7	13.7	16.8	17.0	18.0	24.9	35.0	33.0	33.0	42.0	36.0
Heating Performance (Gas/Electric Only)												
Heating Input: Staged												
Low Heat Input (Btu) (High/ Low Stage)	80,000/ 56,000	80,000/ 56,000	80,000/ 56,000	80,000/ 56,000	120,000/ 84,000	120,000/84,000	150,000/ 105,000	150,000/ 105,000	250,000/ 175,000	250,000/ 175,000	250,000/ 175,000	250,000/ 175,000
Mid Heat Input (Btu) (High/ Low Stage)	100,000/ 70,000	100,000/ 70,000	100,000/ 70,000	120,000/ 84,000	150,000/ 105,000	150,000/ 105,000	200,000/ 140,000	200,000/ 140,000	320,000/ 224,000	320,000/ 224,000	320,000/ 224,000	320,000/ 224,000

Table 9. General data — high efficiency — dual fuel (continued)

	3 Tons	4 Tons	5 Tons	6 Tons	7.5 Tons	8.5 Tons	10 Tons	12.5 Tons	15 Tons	17.5 Tons	20 Tons	25 Tons
	DHK036	DHK048	DHK060	DHK072	DHK090	DHK102	DHK120	DHK150	DHK180	DHK210	DHK240	DHK300
High Heat Input (Btu) (High/ Low Stage)	120,000/ 84,000	130,000/ 91,000	150,000/ 105,000	150,000/ 105,000	200,000/ 140,000	200,000/ 140,000	250,000/ 175,000	250,000/ 175,000	400,000/ 280,000	400,000/ 280,000	400,000/ 280,000	400,000/ 280,000
Heating Output: Staged												
Low Heat Input (Btu) (High/ Low Stage)	64,800/ 45,300	64,800/ 45,300	64,800/ 45,300	64,800/ 45,300	97,200/ 68,000	97,200/68,000	121,500/85,000	121,500/ 85,000	202,500/ 141,750	202,500/ 141,750	202,500/ 141,750	202,500/ 141,750
Mid Heat Input (Btu) (High/ Low Stage)	81,000/ 56,700	81,000/ 56,700	81,000/ 56,700	97,200/ 68,000	121,500/ 85,000	121,500/85,100	162,000/ 113,400	162,000/ 113,400	259,200/ 181,440	259,200/ 181,440	259,200/ 181,440	259,200/ 181,440
High Heat Input (Btu) (High/ Low Stage)	97,200/ 68,000	105,300/ 73,710	121,500/ 85,000	121,500/ 85,000	162,000/ 113,400	162,000/ 113,400	202,500/ 141,750	202,500/ 141,750	324,000/ 226,800	324,000/ 226,800	324,000/ 226,800	324,000/ 226,800
Heating Input: Modulating												
Low Heat Input (Btu) (Maximum/Minimum)	—	—	—	80,000/ 8,000	—	120,000/12,000	150,000/15,000	—	250,000/ 25,000	250,000/ 25,000	250,000/ 25,000	250,000/ 25,000
High Heat Input (Btu) (Maximum/Minimum)	—	—	—	—	200,000/ 20,000	200,000/20,000	250,000/25,000	250,000/ 25,000	400,000/ 40,000	400,000/ 40,000	400,000/ 40,000	—
Heating Output: Modulating												
Low Heat Input (Btu) (Maximum/Minimum)	—	—	—	64,800/ 6,480	—	97,200/9,720	121,500/12,150	—	202,500/ 20,250	202,500/ 20,250	202,500/ 20,250	202,500/ 20,250
High Heat Input (Btu) (Maximum/Minimum)	—	—	—	—	162,000/ 16,200	162,000/16,200	202,500/20,250	202,500/ 20,250	324,000/ 32,400	324,000/ 32,400	324,000/ 32,400	—
Heating Input: Ultra-low NOx[k] [l]												
Low Heat Input (Btu)	60000	60000	60000	—	—	—	—	—	—	—	—	—
Heating Output: Ultra-low Nox[k] [l]												
Low Heat Input (Btu)	48000	48000	48000	—	—	—	—	—	—	—	—	—
Steady State Efficiency % – Staged												
Low Heat Input	81	81	81	81	81	81	81	81	81	81	81	81
Mid Heat Input	81	81	81	81	81	81	81	81	81	81	81	81
High Heat Input	81	81	81	81	81	81	81	81	81	81	81	81
Steady State Efficiency % - Ultra-low NOx												
Low Heat Input	80	80	80	—	—	—	—	—	—	—	—	—
No. Burners: Staged												
Low Heat Input	3	3	3	3	3	3	4	5	5	5	5	5
Mid Heat Input	4	4	4	3	4	4	4	5	7	7	7	7
High Heat Input	5	5	5	4	6	6	6	7	8	8	8	8
No. Burners: Modulating												
Low Heat Input	—	—	—	2	—	4	4	—	6	6	6	6

Table 9. General data — high efficiency — dual fuel (continued)

	3 Tons	4 Tons	5 Tons	6 Tons	7.5 Tons	8.5 Tons	10 Tons	12.5 Tons	15 Tons	17.5 Tons	20 Tons	25 Tons
	DHK036	DHK048	DHK060	DHK072	DHK090	DHK102	DHK120	DHK150	DHK180	DHK210	DHK240	DHK300
High Heat Input	—	—	—	—	6	6	6	6	8	8	8	—
No. Burners: Ultra-low NOx[k] [l]												
Low Heat Input	2	2	2	—	—	—	—	—	—	—	—	—
No. Stages: Staged												
Low Heat Input	2	2	2	2	2	2	2	2	2	2	2	2
Mid Heat Input	2	2	2	2	2	2	2	2	2	2	2	2
High Heat Input	2	2	2	2	2	2	2	2	2	2	2	2
No. Stages: Ultra-low NOx[k] [l]												
Low Heat Input	1	1	1	—	—	—	—	—	—	—	—	—
Gas Supply Line Pressure (InWC)												
Natural (minimum/maximum) Low Heat	4.5/14.0	4.5/14.0	4.5/14.0	4.5/14.0	4.5/14.0	4.5/14.0	4.5/14.0	4.5/14.0	4.5/14.0	4.5/14.0	4.5/14.0	4.5/14.0
Natural (minimum/maximum) Mid Heat	4.5/14.0	4.5/14.0	4.5/14.0	4.5/14.0	4.5/14.0	4.5/14.0	4.5/14.0	4.5/14.0	4.5/14.0	4.5/14.0	4.5/14.0	4.5/14.0
Natural (minimum/maximum) High Heat	4.5/14.0	4.5/14.0	4.5/14.0	4.5/14.0	4.5/14.0	4.5/14.0	4.5/14.0	4.5/14.0	6.0/14.0	6.0/14.0	6.0/14.0	6.0/14.0
LP (minimum/maximum)	11.5/14.0	11.5/14.0	11.5/14.0	11.5/14.0	11.5/14.0	11.5/14.0	11.5/14.0	11.5/14.0	11.5/14.0	11.5/14.0	11.5/14.0	11.5/14.0
Gas Connection Pipe Size (in.): Staged												
Low Heat	3/4	3/4	3/4	1/2	3/4	3/4	3/4	3/4	3/4	3/4	3/4	3/4
Mid Heat	3/4	3/4	3/4	3/4	3/4	3/4	3/4	3/4	3/4	3/4	3/4	3/4
High Heat	3/4	3/4	3/4	3/4	3/4	3/4	3/4	3/4	3/4	3/4	3/4	3/4
Gas Connection Pipe Size (in.): Ultra low NOx												
Low Heat	1/2	1/2	1/2	—	—	—	—	—	—	—	—	—
Cabinet												
Cabinet Size	B0	B0	B0	B0	B0	B0	C0	D0	D0	D0	D1	D1

(a) The 3 to 5 ton cooling performance is rated at 95°F ambient, 80°F entering dry bulb, 67°F entering wet bulb. Gross capacity does not include the effect of fan motor heat. AHRI capacity is net and includes the effect of fan motor heat. Units are suitable for operation to ±20% of nominal cfm. Units are certified in accordance with the Unitary Air-Conditioner Equipment certification program, which is based on AHRI Standard 210/240.

(b) SEER shown for 3 to 5 ton units only. 3 to 5T EER and SEER are rated at AHRI conditions and calculated in accordance with AHRI Standard 210/240-2017. Airflow and net cooling capacity not shown.

(c) EER2 and SEER2 shown for 3 to 5 ton units only. EER2 and SEER2 are rated at AHRI conditions and certified in accordance with AHRI Standard 210/240-2023.

(d) IEER shown for 6 to 25 ton units only.

(e) The 3 to 5 ton heating performance is rated at 47°F ambient with 43°F wet bulb, 70°F entering dry bulb, 60°F entering wet bulb. High temp Btuh rating includes the effect of fan motor heat. Units are suitable for operation to ±20% of nominal cfm. Units are certified in accordance with the Unitary Air-Conditioner Equipment certification program, which is based on AHRI Standard 210/240.

(f) COP2 shown for 3 to 5 ton units only.

(g) HSPF is rated at AHRI conditions and calculated in accordance with AHRI Standard 210/240-2017. Airflow and heating capacities not shown.

(h) HSPF2 is rated at AHRI conditions and certified in accordance with AHRI Standard 210/240-2023.

(i) For 17.5 to 20 ton, the oversized motor is only offered on units with optional modulating gas heat.

Table 9. General data — high efficiency — dual fuel (continued)

(j) Outdoor sound rating shown is tested in accordance with AHRI 370-2015. For additional information reference the outdoor sound power level data in the performance section.
(k) No 575 volt available on ultra-low NOx.
(l) Ultra-low NOx gas furnace option not available for High Altitude installations above 2000 feet.

Gross Cooling Capacities

Table 10. Gross cooling capacities — 3 tons standard efficiency, heat pump

CFM	Ent DB (° F)	Entering Wet Bulb Temp (°F)						Entering Wet Bulb Temp (°F)						Entering Wet Bulb Temp (°F)					
		61		67		73		61		67		73		61		67		73	
		MBh	SHC	MBh	SHC	MBh	SHC	MBh	SHC	MBh	SHC	MBh	SHC	MBh	SHC	MBh	SHC	MBh	SHC
		Ambient Temperature 85°F						Ambient Temperature 95°F						Ambient Temperature 105°F					
900	75	33.6	26.3	38.0	20.5	42.7	14.6	31.5	25.0	35.7	19.3	40.2	13.4	29.2	23.7	33.2	18.0	37.5	12.1
	80	33.7	31.1	38.1	25.5	42.7	19.6	31.6	29.8	35.8	24.3	40.3	18.4	29.4	28.5	33.3	23.0	37.6	17.1
	85	34.5	34.5	38.1	30.4	42.8	24.6	32.7	32.7	35.9	29.2	40.4	23.4	30.8	30.8	33.4	27.9	37.7	22.1
	90	36.6	36.6	38.2	35.2	42.9	29.5	34.8	34.8	36.0	34.0	40.4	28.3	32.9	32.9	33.6	32.7	37.8	27.1
1080	75	35.0	29.3	39.4	22.4	44.1	15.2	32.8	27.9	37.0	21.1	41.5	13.9	30.4	26.6	34.4	19.8	38.7	12.6
	80	35.3	35.1	39.5	28.3	44.2	21.2	33.1	33.1	37.1	27.1	41.6	20.0	31.1	31.1	34.6	25.8	38.8	18.7
	85	37.2	37.2	39.6	34.1	44.3	27.2	35.3	35.3	37.3	32.9	41.7	25.9	33.3	33.3	34.8	31.5	39.0	24.6
	90	39.5	39.5	40.0	40.0	44.4	33.1	37.6	37.6	37.7	37.7	41.9	31.9	35.5	35.5	35.6	35.6	39.1	30.6
1200	75	35.8	31.2	40.2	23.6	44.9	15.5	33.5	29.9	37.7	22.3	42.1	14.3	31.1	28.5	35.0	20.9	39.3	13.0
	80	36.4	36.4	40.3	30.2	45.0	22.2	34.4	34.4	37.8	28.9	42.3	21.0	32.3	32.3	35.2	27.6	39.5	19.7
	85	38.8	38.8	40.5	36.6	45.1	28.9	36.8	36.8	38.1	35.3	42.4	27.6	34.7	34.7	35.5	33.9	39.6	26.3
	90	41.2	41.2	41.3	41.3	45.2	35.5	39.2	39.2	39.3	39.3	42.6	34.2	37.0	37.0	37.1	37.1	39.8	32.8
1320	75	36.5	33.1	40.8	24.7	45.5	15.9	34.1	31.8	38.3	23.4	42.7	14.6	31.7	30.4	35.6	22.1	39.8	13.3
	80	37.7	37.7	40.9	32.0	45.6	23.2	36.5	36.5	38.4	30.7	42.9	22.0	34.3	34.3	35.7	29.2	40.0	20.6
	85	40.2	40.2	41.2	39.0	45.7	30.5	38.1	38.1	38.8	37.7	43.0	29.3	35.9	35.9	36.2	36.2	40.1	28.0
	90	42.7	42.7	42.8	42.8	45.9	37.8	40.6	40.6	42.0	42.0	43.2	36.3	38.3	38.3	38.4	38.4	40.4	35.0
1440	75	37.1	35.0	41.3	25.8	46.0	16.2	34.7	33.7	38.7	24.5	43.2	14.9	32.2	32.2	36.0	23.2	40.2	13.6
	80	38.8	38.8	41.5	33.6	46.2	24.2	36.7	36.7	38.9	32.3	43.4	22.9	34.4	34.4	36.2	30.9	40.4	21.6
	85	41.4	41.4	41.9	41.4	46.3	32.2	39.2	39.2	39.5	39.5	43.5	30.9	36.9	36.9	37.0	37.0	40.6	29.6
	90	44.0	44.0	44.1	44.1	46.5	39.9	41.8	41.8	41.9	41.9	43.8	38.6	39.4	39.4	39.5	39.5	40.9	37.2
		Ambient Temperature 115°F						Ambient Temperature 125°F											
900	75	26.7	22.3	30.6	16.6	34.6	10.7	24.1	20.7	27.7	15.2	31.5	9.3						
	80	26.9	26.9	30.7	21.6	34.8	15.8	24.6	24.6	27.8	20.2	31.7	14.4						
	85	28.8	28.8	30.8	26.4	34.9	20.8	26.5	26.5	28.0	25.0	31.8	19.4						
	90	30.8	30.8	31.1	31.1	35.0	25.7	28.5	28.5	28.6	28.6	32.0	24.3						
1080	75	27.9	25.1	31.7	18.4	35.7	11.3	25.1	23.6	28.7	16.9	32.5	9.9						
	80	28.9	28.9	31.8	24.4	35.9	17.3	26.5	26.5	28.8	22.8	32.7	15.9						
	85	31.1	31.1	32.1	30.1	36.0	23.3	28.7	28.7	29.1	28.6	32.8	21.9						
	90	33.3	33.3	33.3	33.3	36.2	29.3	30.8	30.8	30.9	30.9	33.0	27.6						
1200	75	28.5	27.0	32.2	19.5	36.2	11.6	25.7	25.5	29.2	18.1	32.9	10.2						
	80	30.8	30.8	32.4	26.0	36.4	18.3	27.6	27.6	29.4	24.5	33.2	16.9						
	85	32.3	32.3	32.8	32.5	36.6	25.0	29.8	29.8	29.9	29.9	33.3	23.5						
	90	34.6	34.6	34.7	34.7	36.8	31.4	32.1	32.1	32.1	32.1	33.6	29.9						
1320	75	29.0	28.9	32.7	20.7	36.6	11.9	26.3	26.3	29.6	19.2	33.3	10.5						
	80	31.1	31.1	32.9	27.7	36.9	19.3	28.5	28.5	29.8	26.2	33.6	17.8						
	85	33.5	33.5	33.5	33.5	37.0	26.6	32.0	32.0	30.9	30.9	33.7	25.2						
	90	37.2	37.2	35.9	35.9	37.3	33.6	33.1	33.1	33.2	33.2	34.1	32.1						
1440	75	29.6	29.6	33.0	21.8	37.0	12.2	27.0	27.0	29.9	20.3	33.6	10.8						
	80	32.0	32.0	33.3	29.4	37.3	20.3	29.4	29.4	30.2	27.9	33.9	18.8						
	85	34.4	34.4	34.5	34.5	37.4	28.2	31.7	31.7	31.8	31.8	34.1	26.5						
	90	36.9	36.9	36.9	36.9	37.8	35.8	35.7	35.7	34.1	34.1	34.6	34.3						

Notes:

1. All capacities shown are gross and have not considered indoor fan heat. To obtain NET cooling capacity subtract indoor fan heat. For indoor fan heat formula, refer to appropriate airflow table notes.
2. MBh = Total gross capacity
3. SHC = Sensible heat capacity

Gross Cooling Capacities

Table 11. Gross cooling capacities — 4 tons standard efficiency, heat pump

CFM	Ent DB (° F)	Entering Wet Bulb Temp (°F)						Entering Wet Bulb Temp (°F)						Entering Wet Bulb Temp (°F)					
		61		67		73		61		67		73		61		67		73	
		MBh	SHC	MBh	SHC	MBh	SHC	MBh	SHC	MBh	SHC	MBh	SHC	MBh	SHC	MBh	SHC	MBh	SHC
		Ambient Temperature 85°F						Ambient Temperature 95°F						Ambient Temperature 105°F					
1200	75	45.4	35.6	51.0	27.9	57.0	19.8	42.6	34.1	48.0	26.4	53.7	18.3	39.7	32.5	44.8	24.7	50.1	16.7
	80	45.5	42.1	51.1	34.5	57.1	26.5	42.9	40.5	48.1	33.0	53.8	25.0	40.0	38.9	44.9	31.3	50.3	23.4
	85	46.6	46.6	51.2	41.1	57.2	33.1	44.4	44.4	48.2	39.6	53.9	31.6	41.9	41.9	45.0	37.9	50.4	30.0
	90	49.3	49.3	51.4	47.5	57.2	39.8	47.1	47.1	48.5	46.0	54.1	38.3	44.5	44.5	45.4	44.3	50.5	36.6
1440	75	47.2	39.7	52.8	30.3	58.8	20.6	44.3	38.1	49.7	28.7	55.4	19.0	41.2	36.3	46.3	27.1	51.6	17.4
	80	47.7	47.4	52.9	38.2	59.0	28.6	44.9	44.9	49.8	36.7	55.5	27.0	42.2	42.2	46.4	35.0	51.8	25.4
	85	50.2	50.2	53.1	46.1	59.1	36.5	47.7	47.7	50.1	44.4	55.7	35.0	45.0	45.0	46.7	42.7	51.9	33.4
	90	53.2	53.2	53.7	53.7	59.2	44.5	50.6	50.6	50.8	50.8	55.8	43.0	47.8	47.8	47.9	47.9	52.1	41.3
1600	75	48.2	42.1	53.8	31.8	59.8	21.0	45.2	40.5	50.5	30.3	56.2	19.5	42.1	38.8	47.0	28.6	52.3	17.8
	80	49.0	49.0	53.9	40.6	59.9	29.9	46.5	46.5	50.7	39.1	56.4	28.4	43.8	43.8	47.2	37.4	52.5	26.7
	85	52.2	52.2	54.2	49.2	60.0	38.8	49.6	49.6	51.1	47.6	56.5	37.2	46.7	46.7	47.7	45.9	52.7	35.6
	90	55.3	55.3	55.4	55.4	60.2	47.6	52.6	52.6	52.7	52.7	56.7	46.1	49.7	49.7	49.8	49.8	52.9	44.4
1760	75	49.0	44.7	54.5	33.3	60.5	21.4	46.0	43.0	51.2	31.8	56.9	19.9	42.8	41.3	47.6	30.1	52.9	18.2
	80	50.7	50.7	54.7	43.0	60.7	31.2	48.0	48.0	51.4	41.5	57.1	29.7	45.2	45.2	47.9	39.5	53.2	28.0
	85	53.9	53.9	55.2	52.4	60.8	41.0	51.2	51.2	52.0	50.8	57.3	39.4	48.2	48.2	48.6	48.6	53.3	37.8
	90	57.2	57.2	57.3	57.3	61.0	50.7	54.4	54.4	54.5	54.5	57.5	48.8	51.3	51.3	51.4	51.4	53.7	47.1
1920	75	49.8	47.2	55.2	34.8	61.2	21.8	46.8	45.5	51.8	33.2	57.4	20.3	43.5	43.5	48.2	31.5	53.4	18.6
	80	52.1	52.1	55.4	45.4	61.4	32.5	49.4	49.4	52.1	43.5	57.7	31.0	46.4	46.4	48.5	41.8	53.7	29.3
	85	55.4	55.4	56.1	55.7	61.5	43.1	52.6	52.6	52.9	52.9	57.9	41.6	49.5	49.5	49.6	49.6	53.9	39.9
	90	58.8	58.8	58.9	58.9	61.8	53.4	55.9	55.9	56.0	56.0	58.2	51.8	52.7	52.7	52.8	52.8	54.3	50.1
		Ambient Temperature 115°F						Ambient Temperature 125°F											
1200	75	36.5	30.7	41.2	23.0	46.3	15.0	33.0	28.7	37.4	21.2	42.0	13.2						
	80	36.8	36.8	41.4	29.6	46.4	21.7	33.7	33.7	37.6	27.8	42.2	19.9						
	85	39.2	39.2	41.6	36.1	46.6	28.3	36.2	36.2	37.8	34.2	42.4	26.5						
	90	41.7	41.7	42.0	42.0	46.7	34.9	38.7	38.7	38.7	38.7	42.6	33.2						
1440	75	37.9	34.4	42.5	25.3	47.5	15.6	34.2	32.5	38.5	23.4	43.1	13.8						
	80	39.3	39.3	42.7	33.2	47.7	23.7	36.1	36.1	38.7	31.4	43.4	21.8						
	85	42.0	42.0	43.1	40.9	47.9	31.6	38.8	38.8	39.2	39.0	43.5	29.8						
	90	44.8	44.8	44.9	44.9	48.1	39.6	41.4	41.4	41.5	41.5	43.8	37.5						
1600	75	38.6	36.9	43.2	26.8	48.2	16.1	35.0	35.0	39.1	24.9	43.7	14.2						
	80	40.7	40.7	43.4	35.6	48.4	25.0	37.4	37.4	39.4	33.5	43.9	23.1						
	85	43.6	43.6	44.0	44.0	48.6	33.8	40.2	40.2	40.2	40.2	44.1	32.0						
	90	46.4	46.4	46.5	46.5	48.9	42.4	42.9	42.9	43.0	43.0	44.5	40.5						
1760	75	39.4	39.4	43.8	28.3	48.7	16.5	35.8	35.8	39.6	26.4	44.1	14.6						
	80	42.0	42.0	44.1	37.7	49.0	26.3	39.8	39.8	39.9	35.7	44.4	24.4						
	85	44.9	44.9	45.0	45.0	49.1	36.0	41.4	41.4	41.4	41.4	44.6	34.2						
	90	47.9	47.9	48.0	48.0	49.6	45.3	46.0	46.0	44.3	44.3	45.1	43.4						
1920	75	40.1	40.1	44.2	29.7	49.1	16.8	36.7	36.7	40.0	27.9	44.5	15.0						
	80	43.1	43.1	44.6	39.9	49.4	27.5	39.5	39.5	40.5	38.0	44.8	25.7						
	85	46.1	46.1	46.2	46.2	49.6	38.2	42.4	42.4	42.5	42.5	45.1	35.9						
	90	49.2	49.2	49.2	49.2	50.2	48.3	45.3	45.3	45.4	45.4	45.7	45.7						

Notes:

1. All capacities shown are gross and have not considered indoor fan heat. To obtain NET cooling capacity subtract indoor fan heat. For indoor fan heat formula, refer to appropriate airflow table notes.
2. MBh = Total gross capacity
3. SHC = Sensible heat capacity

Table 12. Gross cooling capacities — 5 tons standard efficiency, heat pump

CFM	Ent DB (° F)	Entering Wet Bulb Temp (°F)						Entering Wet Bulb Temp (°F)						Entering Wet Bulb Temp (°F)					
		61		67		73		61		67		73		61		67		73	
		MBh	SHC	MBh	SHC	MBh	SHC	MBh	SHC	MBh	SHC	MBh	SHC	MBh	SHC	MBh	SHC	MBh	SHC
		Ambient Temperature 85°F						Ambient Temperature 95°F						Ambient Temperature 105°F					
1500	75	54.6	43.8	60.9	33.9	67.5	23.6	51.4	42.1	57.5	32.2	63.8	21.9	48.1	40.2	53.8	30.4	59.8	20.2
	80	54.9	51.8	61.0	42.2	67.6	31.9	51.8	50.1	57.6	40.4	63.9	30.3	48.5	48.2	54.0	38.7	59.9	28.5
	85	56.6	56.6	61.1	50.4	67.7	40.2	53.9	53.9	57.8	48.7	64.0	38.5	51.1	51.1	54.2	46.9	60.1	36.8
	90	59.8	59.8	61.5	58.4	67.8	48.5	57.1	57.1	58.2	56.6	64.1	46.8	54.2	54.2	54.7	54.7	60.2	45.1

Table 12. Gross cooling capacities — 5 tons standard efficiency, heat pump (continued)

CFM	Ent DB (° F)	Entering Wet Bulb Temp (°F)						Entering Wet Bulb Temp (°F)						Entering Wet Bulb Temp (°F)					
		61		67		73		61		67		73		61		67		73	
		MBh	SHC	MBh	SHC	MBh	SHC	MBh	SHC	MBh	SHC	MBh	SHC	MBh	SHC	MBh	SHC	MBh	SHC
1800	75	56.6	48.8	62.8	36.8	69.4	24.4	53.3	46.7	59.3	35.1	65.4	22.7	49.8	44.9	55.4	33.3	61.3	21.0
	80	57.3	57.3	63.0	46.7	69.5	34.4	54.3	54.3	59.4	45.0	65.6	32.7	51.3	51.3	55.6	43.2	61.5	30.9
	85	60.5	60.5	63.3	56.3	69.6	44.3	57.7	57.7	59.8	54.5	65.7	42.7	54.6	54.6	56.0	52.7	61.6	40.9
	90	64.0	64.0	64.1	64.1	69.7	54.2	61.0	61.0	61.1	61.1	65.9	52.6	57.8	57.8	57.9	57.9	61.8	50.8
2000	75	57.7	51.7	63.8	38.7	70.3	24.9	54.3	49.9	60.1	36.9	66.3	23.2	50.8	48.0	56.2	35.1	62.0	21.5
	80	59.2	59.2	64.0	49.7	70.4	36.0	56.2	56.2	60.3	47.9	66.5	34.3	53.1	53.1	56.5	46.1	62.2	32.5
	85	62.7	62.7	64.4	60.3	70.6	47.1	59.7	59.7	60.9	58.5	66.6	45.4	56.5	56.5	57.1	56.7	62.4	43.6
	90	66.3	66.3	66.4	66.4	70.8	58.1	63.1	63.1	63.3	63.3	66.9	56.0	59.8	59.8	59.9	59.9	62.7	54.2
2200	75	58.6	54.8	64.6	40.5	71.0	25.4	55.2	53.0	60.9	38.8	67.0	23.7	51.7	51.1	56.9	36.9	62.6	21.9
	80	61.0	61.0	64.9	52.6	71.2	37.6	59.8	59.8	61.1	50.5	67.2	35.9	54.6	54.6	57.2	48.6	62.9	34.1
	85	64.6	64.6	65.5	64.3	71.4	49.8	61.5	61.5	61.9	61.9	67.3	48.1	58.1	58.1	58.2	58.2	63.1	46.3
	90	68.2	68.2	68.3	68.3	71.7	61.5	65.0	65.0	65.1	65.1	67.7	59.7	61.5	61.5	61.6	61.6	63.5	57.9
2400	75	59.5	57.9	65.3	42.3	71.7	25.9	56.1	56.1	61.5	40.6	67.5	24.2	52.5	52.5	57.5	38.7	63.1	22.4
	80	62.5	62.5	65.6	55.1	71.9	39.2	59.3	59.3	61.9	53.3	67.8	37.5	55.9	55.9	57.9	51.4	63.4	35.7
	85	66.2	66.2	66.5	66.5	72.0	52.4	63.0	63.0	63.0	63.0	68.0	50.7	59.5	59.5	59.5	59.5	63.6	49.0
	90	70.0	70.0	70.1	70.1	72.5	65.2	66.6	66.6	66.7	66.7	68.5	63.4	63.0	63.0	63.0	63.0	64.2	61.6
		Ambient Temperature 115°F						Ambient Temperature 125°F											
1500	75	44.5	38.1	50.0	28.5	55.5	18.4	40.7	36.1	45.8	26.6	51.1	16.5						
	80	45.0	45.0	50.1	36.8	55.7	26.7	41.8	41.8	46.0	34.9	51.3	24.8						
	85	48.0	48.0	50.4	44.8	55.9	35.0	44.8	44.8	46.3	42.8	51.4	33.1						
	90	51.0	51.0	51.1	51.1	56.0	43.3	47.6	47.6	47.7	47.7	51.6	41.4						
1800	75	46.1	42.9	51.4	31.4	56.9	19.1	42.2	40.8	47.1	29.4	52.2	17.2						
	80	48.1	48.1	51.6	41.3	57.1	29.1	44.6	44.6	47.3	39.0	52.5	27.2						
	85	51.2	51.2	52.1	50.8	57.3	39.1	47.7	47.7	48.0	48.0	52.6	37.2						
	90	54.4	54.4	54.5	54.5	57.5	48.6	50.7	50.7	50.8	50.8	53.0	46.7						
2000	75	47.0	46.0	52.1	33.2	57.5	19.6	43.1	43.1	47.7	31.2	52.8	17.7						
	80	49.7	49.7	52.4	43.8	57.8	30.7	46.1	46.1	48.1	41.8	53.1	28.8						
	85	53.0	53.0	53.1	53.1	58.0	41.8	49.2	49.2	49.3	49.3	53.3	39.9						
	90	56.2	56.2	56.3	56.3	58.3	52.3	52.3	52.3	52.4	52.4	53.7	50.3						
2200	75	47.9	47.9	52.7	35.0	58.1	20.1	44.1	44.1	48.2	33.0	53.3	18.2						
	80	51.1	51.1	53.1	46.7	58.3	32.3	47.4	47.4	48.7	44.6	53.6	30.4						
	85	54.4	54.4	54.5	54.5	58.6	44.5	50.6	50.6	50.6	50.6	53.8	42.0						
	90	57.7	57.7	57.8	57.8	59.1	56.0	53.7	53.7	53.8	53.8	54.4	54.0						
2400	75	48.9	48.9	53.2	36.8	58.5	20.6	45.1	45.1	48.7	34.8	53.7	18.6						
	80	52.3	52.3	53.7	49.4	58.8	33.9	48.5	48.5	49.3	47.4	54.0	32.0						
	85	55.7	55.7	55.8	55.8	59.1	46.6	51.7	51.7	51.8	51.8	54.3	44.6						
	90	59.1	59.1	59.2	59.2	59.7	59.6	54.9	54.9	55.0	55.0	55.1	55.1						

Notes:

1. All capacities shown are gross and have not considered indoor fan heat. To obtain NET cooling capacity subtract indoor fan heat. For indoor fan heat formula, refer to appropriate airflow table notes.
2. MBh = Total gross capacity
3. SHC = Sensible heat capacity

Table 13. Gross cooling capacities — 6 tons standard efficiency, heat pump

CFM	Ent DB (° F)	Entering Wet Bulb Temp (°F)						Entering Wet Bulb Temp (°F)						Entering Wet Bulb Temp (°F)					
		61		67		73		61		67		73		61		67		73	
		MBh	SHC	MBh	SHC	MBh	SHC	MBh	SHC	MBh	SHC	MBh	SHC	MBh	SHC	MBh	SHC	MBh	SHC
		Ambient Temperature 85°F						Ambient Temperature 95°F						Ambient Temperature 105°F					
1800	75	77.0	58.9	76.0	42.1	84.6	30.0	64.9	51.9	72.7	40.4	80.8	28.3	61.6	50.0	69.0	38.6	76.7	26.5
	80	68.4	63.3	76.3	52.0	85.0	40.0	65.5	61.6	72.9	50.3	81.2	38.2	62.3	59.7	69.3	48.5	77.7	36.7
	85	70.5	70.5	76.6	61.8	85.2	49.8	68.0	68.0	73.3	59.9	81.5	48.2	65.2	65.2	69.7	58.0	77.5	46.3
	90	74.6	74.6	77.1	71.3	85.5	59.7	72.0	72.0	73.9	69.6	81.8	58.0	69.1	69.1	70.3	67.7	77.8	56.2
2160	75	70.8	59.4	78.8	45.7	87.3	31.1	67.6	57.6	75.2	43.9	83.2	29.3	64.2	55.7	71.3	42.1	78.9	27.5
	80	71.7	71.2	79.1	57.5	87.8	43.0	68.7	68.7	75.6	55.8	83.9	41.3	65.7	65.7	71.8	53.6	79.5	39.5
	85	75.8	75.8	79.7	68.9	88.2	54.9	73.0	73.0	76.2	67.1	84.2	53.2	69.9	69.9	72.4	65.2	79.9	51.3
	90	80.3	80.3	80.7	80.7	88.6	66.5	77.4	77.4	77.6	77.6	84.6	64.7	74.2	74.2	74.3	74.3	80.8	63.0

Table 13. Gross cooling capacities — 6 tons standard efficiency, heat pump (continued)

CFM	Ent DB (° F)	Entering Wet Bulb Temp (°F)						Entering Wet Bulb Temp (°F)						Entering Wet Bulb Temp (°F)					
		61		67		73		61		67		73		61		67		73	
		MBh	SHC	MBh	SHC	MBh	SHC	MBh	SHC	MBh	SHC	MBh	SHC	MBh	SHC	MBh	SHC	MBh	SHC
2400	75	72.3	63.2	80.2	48.0	88.6	31.7	69.1	61.4	76.5	46.2	85.1	30.2	65.5	59.4	72.5	44.3	79.9	28.1
	80	74.1	74.1	80.7	60.7	89.3	45.0	71.3	71.3	77.0	58.9	85.2	43.3	68.1	68.1	73.1	56.9	80.7	41.4
	85	78.8	78.8	81.5	73.7	89.7	58.3	75.8	75.8	77.9	71.9	85.6	56.5	72.5	72.5	73.9	69.9	81.1	54.6
	90	83.5	83.5	83.7	83.7	90.3	71.0	80.4	80.4	80.6	80.6	86.2	69.1	77.0	77.0	77.1	77.1	82.2	67.3
2640	75	73.7	66.9	81.3	50.2	89.7	32.4	70.4	65.1	77.5	48.4	85.4	30.6	66.7	63.1	73.4	46.5	80.8	28.7
	80	76.6	76.6	82.0	64.1	90.5	47.0	73.6	73.6	78.3	62.2	86.2	45.2	70.2	70.2	74.2	60.3	81.6	43.3
	85	81.4	81.4	83.0	78.4	91.0	61.6	78.3	78.3	79.3	76.6	86.7	59.3	74.8	74.8	75.3	74.6	82.2	57.2
	90	86.3	86.3	86.5	86.5	91.6	75.3	83.1	83.1	83.2	83.2	87.5	73.5	79.8	79.8	79.6	79.6	83.4	71.6
2880	75	74.9	70.5	82.3	52.4	90.6	33.0	71.6	68.7	78.4	50.6	86.9	31.4	67.8	66.7	74.2	48.0	81.5	29.3
	80	78.7	78.7	83.1	67.4	91.5	48.9	75.6	75.6	79.3	65.6	87.1	47.1	72.1	72.1	75.2	63.5	82.4	45.2
	85	83.7	83.7	84.4	83.1	92.5	64.3	80.4	80.4	80.7	80.7	87.8	62.2	76.8	76.8	77.5	77.5	83.1	60.2
	90	88.8	88.8	89.0	89.0	92.9	79.7	85.4	85.4	85.5	85.5	89.0	78.0	81.6	81.6	81.7	81.7	84.4	75.9
		Ambient Temperature 115°F						Ambient Temperature 125°F											
1800	75	58.1	48.0	65.0	36.6	72.2	24.5	54.1	45.9	60.6	34.6	67.3	22.5						
	80	58.7	57.8	65.3	46.5	72.7	34.5	55.0	55.0	60.9	44.4	67.8	32.4						
	85	62.1	62.1	65.7	56.0	73.0	44.4	58.6	58.6	61.4	53.9	68.2	42.3						
	90	65.9	65.9	66.4	65.8	73.3	54.3	62.3	62.3	62.5	62.5	68.5	51.9						
2160	75	60.4	53.7	67.1	40.1	74.1	25.5	56.2	51.4	62.4	38.0	69.4	23.6						
	80	62.4	62.4	67.6	51.5	74.8	37.5	58.7	58.7	63.0	49.3	69.7	35.4						
	85	66.5	66.5	68.3	63.1	75.2	49.4	62.7	62.7	63.7	60.9	70.1	47.3						
	90	70.6	70.6	70.8	70.8	75.7	60.7	66.7	66.7	66.8	66.8	71.0	58.6						
2400	75	61.6	57.3	68.1	42.3	75.0	26.1	57.4	55.1	63.3	39.7	70.3	24.2						
	80	64.6	64.6	68.7	54.8	75.8	39.4	60.8	60.8	64.0	52.5	70.6	37.3						
	85	68.9	68.9	69.7	67.8	76.3	52.1	64.9	64.9	65.0	65.0	71.1	49.8						
	90	73.2	73.2	73.3	73.3	77.0	65.1	69.0	69.0	69.2	69.2	72.1	62.9						
2640	75	62.8	60.9	68.9	43.9	75.8	26.7	58.4	58.4	64.1	41.6	70.3	24.6						
	80	66.6	66.6	69.8	58.1	76.8	41.4	62.6	62.6	65.0	55.8	71.2	39.2						
	85	71.0	71.0	71.1	71.1	77.3	55.1	66.8	66.8	66.9	66.9	72.0	52.8						
	90	75.5	75.5	75.6	75.6	78.1	69.4	71.1	71.1	71.5	71.5	72.9	67.1						
2880	75	63.8	63.8	69.7	45.8	76.3	27.3	59.8	59.8	64.8	43.4	70.6	25.1						
	80	68.3	68.3	70.7	61.4	77.3	42.6	64.1	64.1	65.8	59.0	71.8	41.1						
	85	72.9	72.9	73.0	73.0	78.1	58.0	68.5	68.5	68.6	68.6	72.8	55.7						
	90	77.4	77.4	77.6	77.6	79.1	73.7	73.1	73.1	73.0	73.0	73.8	71.4						

Notes:

1. All capacities shown are gross and have not considered indoor fan heat. To obtain NET cooling capacity subtract indoor fan heat. For indoor fan heat formula, refer to appropriate airflow table notes.
2. MBh = Total gross capacity
3. SHC = Sensible heat capacity

Table 14. Gross cooling capacities — 7.5 tons standard efficiency, heat pump

CFM	Ent DB (° F)	Entering Wet Bulb Temp (°F)						Entering Wet Bulb Temp (°F)						Entering Wet Bulb Temp (°F)					
		61		67		73		61		67		73		61		67		73	
		MBh	SHC	MBh	SHC	MBh	SHC	MBh	SHC	MBh	SHC	MBh	SHC	MBh	SHC	MBh	SHC	MBh	SHC
		Ambient Temperature 85°F						Ambient Temperature 95°F						Ambient Temperature 105°F					
2250	75	89.4	71.0	88.8	49.8	99.3	34.8	75.6	62.4	84.8	47.8	94.9	32.7	71.6	60.2	80.5	45.6	90.1	30.6
	80	79.9	76.5	88.9	62.2	99.4	47.2	76.4	74.5	85.0	60.1	95.1	45.2	72.5	72.2	80.7	57.9	90.4	43.0
	85	83.2	83.2	89.3	74.5	99.6	59.6	80.2	80.2	85.4	72.2	95.3	57.6	76.8	76.8	81.2	70.0	90.6	55.4
	90	88.2	88.2	90.1	86.5	99.8	71.9	85.0	85.0	86.3	84.5	95.5	69.9	81.6	81.6	82.2	82.2	90.8	67.8
2700	75	82.3	71.5	91.8	54.2	102.2	36.1	78.6	69.5	87.6	52.1	97.6	34.0	74.4	67.1	83.1	49.9	92.7	31.8
	80	83.9	83.9	92.1	69.0	102.5	51.0	80.7	80.7	87.9	67.0	97.9	48.9	77.1	77.1	83.4	64.7	93.0	46.7
	85	89.3	89.3	92.8	83.5	102.7	65.9	85.9	85.9	88.7	81.3	98.2	63.8	82.2	82.2	84.3	79.1	93.2	61.6
	90	94.6	94.6	94.8	94.8	103.1	80.7	91.2	91.2	91.4	91.4	98.6	78.7	87.4	87.4	87.6	87.6	93.7	76.1
3000	75	84.0	76.3	93.3	57.1	103.8	36.9	80.2	74.2	89.0	55.0	99.0	34.8	76.0	71.9	84.4	52.7	93.9	32.6
	80	87.0	87.0	93.7	73.5	104.1	53.5	83.6	83.6	89.4	71.0	99.4	51.4	79.8	79.8	84.9	68.8	94.3	49.2
	85	92.6	92.6	94.7	89.5	104.3	70.0	89.1	89.1	90.6	87.4	99.6	67.9	85.2	85.2	86.1	85.1	94.6	65.7
	90	98.2	98.2	98.4	98.4	104.9	86.1	94.6	94.6	94.8	94.8	100.1	83.9	90.6	90.6	90.8	90.8	95.3	81.7

Table 14. Gross cooling capacities — 7.5 tons standard efficiency, heat pump (continued)

CFM	Ent DB (° F)	Entering Wet Bulb Temp (°F)						Entering Wet Bulb Temp (°F)						Entering Wet Bulb Temp (°F)					
		61		67		73		61		67		73		61		67		73	
		MBh	SHC	MBh	SHC	MBh	SHC	MBh	SHC	MBh	SHC	MBh	SHC	MBh	SHC	MBh	SHC	MBh	SHC
3300	75	85.5	81.0	94.6	59.9	105.0	37.7	81.7	78.5	90.2	57.7	100.2	35.5	77.4	76.5	85.5	55.5	95.0	33.3
	80	89.7	89.7	95.1	77.5	105.4	55.9	86.2	86.2	90.8	75.3	100.4	53.8	82.3	82.3	86.2	73.0	95.4	51.6
	85	95.5	95.5	96.5	95.5	105.7	74.1	91.8	91.8	92.4	92.4	100.8	71.9	87.8	87.8	87.9	87.9	95.8	69.8
	90	101.4	101.4	101.6	101.6	106.4	91.7	97.6	97.6	97.7	97.7	101.6	89.5	93.4	93.4	93.6	93.6	96.7	87.2
3600	75	86.9	85.7	95.7	62.6	106.1	38.4	83.0	83.0	91.2	60.5	101.0	36.2	78.8	78.8	86.4	58.2	95.9	34.0
	80	92.1	92.1	96.4	81.8	106.5	58.3	88.4	88.4	92.0	79.6	101.5	56.2	84.4	84.4	87.3	77.2	96.4	54.0
	85	98.1	98.1	98.3	98.3	106.8	78.2	94.3	94.3	94.4	94.4	101.9	76.0	90.1	90.1	90.2	90.2	96.8	73.8
	90	104.2	104.2	104.3	104.3	107.8	97.2	100.2	100.2	100.2	100.2	103.0	95.0	95.9	95.9	96.0	96.0	98.0	92.8
		Ambient Temperature 115°F						Ambient Temperature 125°F											
2250	75	67.5	57.7	76.0	43.4	85.2	28.3	63.1	55.2	71.2	41.0	79.9	26.0						
	80	68.6	68.6	76.3	55.7	85.4	40.8	64.8	64.8	71.5	53.3	80.2	38.4						
	85	73.2	73.2	76.8	67.7	85.7	53.2	69.4	69.4	72.1	65.3	80.4	50.8						
	90	77.9	77.9	78.1	78.1	86.0	65.5	73.9	73.9	74.1	74.1	80.8	63.2						
2700	75	70.2	64.8	78.4	47.6	87.5	29.5	65.6	62.3	73.3	45.2	82.0	27.2						
	80	73.3	73.3	78.8	62.1	87.8	44.5	69.2	69.2	73.8	59.6	82.4	42.1						
	85	78.3	78.3	79.7	76.8	88.1	59.3	74.1	74.1	74.9	74.3	82.6	57.0						
	90	83.4	83.4	83.5	83.5	88.7	73.8	79.1	79.1	79.2	79.2	83.3	71.3						
3000	75	71.7	69.5	79.6	50.4	88.6	30.3	67.1	67.0	74.4	48.0	83.0	27.9						
	80	75.9	75.9	80.1	66.4	89.1	46.9	71.7	71.7	75.1	63.9	83.5	44.5						
	85	81.1	81.1	81.5	81.5	89.4	63.4	76.7	76.7	76.9	76.9	83.8	61.0						
	90	86.4	86.4	86.5	86.5	90.1	79.3	81.9	81.9	82.0	82.0	84.7	76.9						
3300	75	73.1	73.1	80.6	53.2	89.6	31.0	68.6	68.6	75.3	50.7	83.9	28.6						
	80	78.2	78.2	81.3	70.6	90.1	49.3	73.8	73.8	76.2	68.1	84.4	46.9						
	85	83.6	83.6	83.7	83.7	90.5	67.5	79.0	79.0	79.1	79.1	84.8	64.5						
	90	89.0	89.0	89.2	89.2	91.5	84.9	84.3	84.3	84.4	84.4	85.9	82.4						
3600	75	74.6	74.6	81.4	55.9	90.4	31.7	70.2	70.2	76.1	53.4	84.6	29.3						
	80	80.1	80.1	82.4	74.8	90.9	51.7	75.6	75.6	77.2	72.3	85.1	49.3						
	85	85.7	85.7	85.8	85.8	91.4	70.8	81.0	81.0	81.1	81.1	85.7	68.3						
	90	91.3	91.3	91.4	91.4	92.7	90.4	86.4	86.4	86.5	86.5	87.1	87.1						

Notes:

1. All capacities shown are gross and have not considered indoor fan heat. To obtain NET cooling capacity subtract indoor fan heat. For indoor fan heat formula, refer to appropriate airflow table notes.
2. MBh = Total gross capacity
3. SHC = Sensible heat capacity

Table 15. Gross cooling capacities — 8.5 tons standard efficiency, heat pump

CFM	Ent DB (° F)	Entering Wet Bulb Temp (°F)						Entering Wet Bulb Temp (°F)						Entering Wet Bulb Temp (°F)					
		61		67		73		61		67		73		61		67		73	
		MBh	SHC	MBh	SHC	MBh	SHC	MBh	SHC	MBh	SHC	MBh	SHC	MBh	SHC	MBh	SHC	MBh	SHC
		Ambient Temperature 85°F						Ambient Temperature 95°F						Ambient Temperature 105°F					
2550	75	107.8	84.0	107.2	60.0	118.9	42.6	91.9	74.6	102.2	57.7	113.3	40.2	87.2	71.9	97.0	55.2	107.4	37.8
	80	97.2	90.7	107.5	74.1	119.2	56.7	92.8	88.3	102.5	71.7	113.6	54.3	88.2	85.8	97.3	69.3	107.8	51.9
	85	100.4	100.4	107.9	88.1	119.4	70.8	96.6	96.6	103.0	85.5	113.9	68.4	92.6	92.6	97.9	83.0	108.1	66.0
	90	106.0	106.0	108.8	101.7	119.8	84.8	102.0	102.0	104.0	99.4	114.3	82.5	97.9	97.9	98.9	96.9	108.5	80.0
3060	75	100.1	85.0	110.8	65.0	122.5	44.1	95.4	82.6	105.5	62.6	116.5	41.6	90.5	80.0	99.9	60.1	110.3	39.1
	80	101.7	101.7	111.2	81.8	122.9	61.0	97.4	97.4	106.0	79.4	117.0	58.6	93.1	93.1	100.5	76.9	110.8	56.1
	85	107.5	107.5	112.1	98.2	123.3	77.9	103.3	103.3	106.9	95.7	117.4	75.5	98.8	98.8	101.4	93.2	111.2	73.0
	90	113.5	113.5	113.8	113.8	123.8	94.8	109.2	109.2	109.4	109.4	118.0	92.4	104.5	104.5	104.7	104.7	111.9	89.4
3400	75	102.2	90.4	112.6	68.2	124.3	45.0	97.4	87.9	107.1	65.7	118.1	42.5	92.3	85.2	101.4	63.2	111.7	40.0
	80	105.1	105.1	113.2	86.9	124.8	63.8	100.8	100.8	107.8	84.0	118.7	61.3	96.3	96.3	102.2	81.4	112.3	58.8
	85	111.4	111.4	114.3	105.0	125.3	82.6	106.9	106.9	109.0	102.5	119.2	80.1	102.2	102.2	103.5	99.9	112.8	77.6
	90	117.8	117.8	118.0	118.0	126.0	100.9	113.1	113.1	113.3	113.3	120.0	98.3	108.2	108.2	108.4	108.4	113.7	95.7
3740	75	104.0	95.6	114.1	71.3	125.8	45.8	99.1	93.1	108.5	68.8	119.5	43.3	93.9	90.4	102.7	66.3	112.9	40.8
	80	108.3	108.3	114.9	91.3	126.4	66.6	103.8	103.8	109.4	88.8	120.1	64.1	99.0	99.0	103.6	86.1	113.6	61.5
	85	114.8	114.8	116.4	111.7	126.9	87.2	110.1	110.1	111.0	109.2	120.7	84.8	105.2	105.2	105.4	105.4	114.2	82.2
	90	121.5	121.5	121.7	121.7	127.9	107.2	116.6	116.6	116.8	116.8	121.8	104.6	111.4	111.4	111.6	111.6	115.4	101.9

Table 15. Gross cooling capacities — 8.5 tons standard efficiency, heat pump (continued)

CFM	Ent DB (° F)	Entering Wet Bulb Temp (°F)						Entering Wet Bulb Temp (°F)						Entering Wet Bulb Temp (°F)					
		61		67		73		61		67		73		61		67		73	
		MBh	SHC	MBh	SHC	MBh	SHC	MBh	SHC	MBh	SHC	MBh	SHC	MBh	SHC	MBh	SHC	MBh	SHC
4080	75	105.6	100.9	115.4	74.4	127.1	46.6	100.6	98.3	109.7	71.9	120.6	44.1	95.4	95.4	103.8	69.4	113.9	41.6
	80	111.1	111.1	116.4	96.1	127.7	69.3	106.4	106.4	110.7	93.5	121.3	66.8	101.4	101.4	104.9	90.8	114.7	64.2
	85	117.9	117.9	118.4	118.4	128.4	91.8	112.9	112.9	113.1	113.1	122.0	88.7	107.7	107.7	107.9	107.9	115.4	85.9
	90	124.8	124.8	125.1	125.1	129.6	113.4	119.7	119.7	119.9	119.9	123.3	110.8	114.2	114.2	114.4	114.4	116.9	108.1
		Ambient Temperature 115°F						Ambient Temperature 125°F											
2550	75	82.3	69.3	91.5	52.7	101.3	35.2	77.0	66.5	85.6	50.0	94.7	32.6						
	80	83.4	83.2	91.8	66.7	101.7	49.4	78.6	78.6	86.0	64.1	95.2	46.8						
	85	88.2	88.2	92.4	80.4	102.0	63.5	83.6	83.6	86.7	77.6	95.5	60.8						
	90	93.4	93.4	93.6	93.6	102.4	77.5	88.6	88.6	88.8	88.8	95.9	74.9						
3060	75	85.3	77.3	94.1	57.5	103.8	36.6	79.8	74.4	88.0	54.8	96.9	33.9						
	80	88.5	88.5	94.7	73.9	104.3	53.5	83.6	83.6	88.6	71.1	97.5	50.9						
	85	94.0	94.0	95.7	90.5	104.8	70.4	88.9	88.9	89.8	87.7	98.0	67.8						
	90	99.5	99.5	99.7	99.7	105.5	86.8	94.2	94.2	94.4	94.4	98.8	84.0						
3400	75	87.0	82.5	95.5	60.6	105.1	37.4	81.4	79.6	89.2	57.9	98.0	34.7						
	80	91.4	91.4	96.2	78.6	105.7	56.3	86.3	86.3	90.0	75.8	98.7	53.6						
	85	97.2	97.2	97.7	97.2	106.2	75.1	91.8	91.8	91.9	91.9	99.3	71.8						
	90	102.9	102.9	103.1	103.1	107.2	93.0	97.3	97.3	97.4	97.4	100.3	90.2						
3740	75	88.5	87.7	96.6	63.7	106.1	38.2	82.9	82.9	90.1	61.0	98.9	35.5						
	80	94.0	94.0	97.6	83.4	106.8	59.0	88.6	88.6	91.2	80.5	99.7	56.3						
	85	99.9	99.9	100.1	100.1	107.5	78.9	94.2	94.2	94.4	94.4	100.5	76.0						
	90	105.9	105.9	106.1	106.1	108.7	99.2	100.0	100.0	100.1	100.1	101.7	96.3						
4080	75	90.2	90.2	97.5	66.8	107.0	39.0	84.8	84.8	91.0	63.1	99.7	36.3						
	80	96.2	96.2	98.8	88.0	107.8	61.6	90.6	90.6	92.3	85.1	100.5	58.9						
	85	102.3	102.3	102.4	102.4	108.6	83.2	96.4	96.4	96.5	96.5	101.4	80.3						
	90	108.5	108.5	108.6	108.6	110.1	105.4	102.4	102.4	102.5	102.5	103.1	102.5						

Notes:

1. All capacities shown are gross and have not considered indoor fan heat. To obtain NET cooling capacity subtract indoor fan heat. For indoor fan heat formula, refer to appropriate airflow table notes.
2. MBh = Total gross capacity
3. SHC = Sensible heat capacity

Table 16. Gross cooling capacities — 10 tons standard efficiency, heat pump

CFM	Ent DB (° F)	Entering Wet Bulb Temp (°F)						Entering Wet Bulb Temp (°F)						Entering Wet Bulb Temp (°F)					
		61		67		73		61		67		73		61		67		73	
		MBh	SHC	MBh	SHC	MBh	SHC	MBh	SHC	MBh	SHC	MBh	SHC	MBh	SHC	MBh	SHC	MBh	SHC
		Ambient Temperature 85°F						Ambient Temperature 95°F						Ambient Temperature 105°F					
3000	75	107.9	87.7	120.3	68.0	133.3	47.6	102.8	85.0	114.7	65.3	126.8	44.8	97.5	82.2	108.8	62.4	120.1	42.0
	80	108.5	102.9	120.8	84.6	134.1	64.3	103.6	100.1	115.3	81.8	127.9	61.6	98.4	97.2	109.4	79.0	121.3	58.8
	85	111.5	111.5	121.2	101.0	134.7	80.9	107.3	107.3	115.6	98.3	128.5	78.2	102.7	102.7	109.8	94.1	122.0	75.4
	90	117.8	117.8	121.9	116.1	135.1	97.5	113.5	113.5	116.5	113.3	129.0	94.8	108.8	108.8	110.8	110.3	122.5	92.0
3600	75	111.7	96.2	124.3	73.9	136.9	49.2	106.4	93.3	118.4	71.1	130.2	46.5	100.9	90.2	112.1	68.2	123.1	43.6
	80	113.3	113.3	124.9	93.7	138.2	69.4	108.2	108.2	119.0	90.9	131.6	66.6	103.0	103.0	112.8	88.0	124.7	63.7
	85	119.2	119.2	125.4	111.8	139.0	89.3	114.6	114.6	119.7	108.8	132.5	86.6	109.6	109.6	113.6	105.8	125.6	83.7
	90	126.1	126.1	127.1	127.1	139.4	109.2	121.3	121.3	121.6	121.6	133.0	106.4	116.2	116.2	116.4	116.4	126.1	103.5
4000	75	113.9	102.3	126.4	77.6	138.8	50.3	108.5	99.3	120.3	74.8	131.8	47.5	102.8	96.1	113.9	71.9	124.5	44.5
	80	116.3	116.3	127.1	99.7	140.4	72.7	111.7	111.7	121.0	96.9	133.6	69.9	106.6	106.6	114.6	93.9	126.5	67.0
	85	123.5	123.5	127.9	119.5	141.2	94.8	118.6	118.6	122.0	116.5	134.5	92.1	113.4	113.4	115.8	113.4	127.4	89.2
	90	130.7	130.7	130.8	130.8	141.7	116.9	125.7	125.7	125.8	125.8	135.0	112.0	120.2	120.2	120.4	120.4	128.0	108.8
4400	75	115.8	108.3	128.1	81.4	140.3	51.3	110.3	105.2	121.9	78.5	133.2	48.4	104.5	102.0	115.3	75.6	125.7	45.5
	80	119.9	119.9	128.9	105.6	142.2	75.9	114.9	114.9	122.6	100.5	135.2	73.1	109.6	109.6	116.1	97.3	128.0	70.2
	85	127.3	127.3	130.0	127.2	143.0	100.3	122.1	122.1	124.1	124.1	136.2	97.5	116.6	116.6	117.8	117.8	128.9	94.6
	90	134.8	134.8	135.0	135.0	143.6	122.1	129.5	129.5	129.6	129.6	136.8	119.1	123.8	123.8	123.9	123.9	129.7	115.9
4800	75	117.5	114.2	129.6	85.1	141.6	52.3	111.9	111.1	123.2	82.2	134.3	49.4	106.1	106.1	116.5	79.2	126.7	46.4
	80	122.9	122.9	130.4	109.0	143.7	79.2	117.8	117.8	124.1	105.9	136.6	76.3	112.3	112.3	117.5	102.6	129.2	73.4
	85	130.6	130.6	132.1	132.1	144.6	105.7	125.2	125.2	126.0	126.0	137.6	102.9	119.5	119.5	119.8	119.8	130.2	100.0
	90	138.3	138.3	138.5	138.5	145.3	129.2	132.8	132.8	133.0	133.0	138.5	126.2	126.9	126.9	127.0	127.0	131.3	122.9
		Ambient Temperature 115°F						Ambient Temperature 120°F						Ambient Temperature 125°F					

Table 16. Gross cooling capacities — 10 tons standard efficiency, heat pump (continued)

CFM	Ent DB (° F)	Entering Wet Bulb Temp (°F)						Entering Wet Bulb Temp (°F)						Entering Wet Bulb Temp (°F)					
		61		67		73		61		67		73		61		67		73	
			75	91.8	77.9	102.5	59.5	113.0	39.0	85.8	74.6	95.9	56.4	105.5	35.9	-	-	-	-
-	-	3000																	
80	93.0		93.0	103.1	76.0	114.4	55.8	87.2	87.2	96.5	72.9	107.0	52.8	-	-	-	-	-	-
85	97.9		97.9	103.6	91.0	115.1	72.5	92.7	92.7	97.2	87.7	107.8	69.4	-	-	-	-	-	-
90	103.8	103.8	104.9	104.9	115.6	89.0	98.4	98.4	98.6	98.6	108.3	86.0	-	-	-	-	-	-	
3600	75	95.0	86.9	105.5	65.2	115.6	40.6	88.8	83.5	98.6	62.0	107.7	37.4	-	-	-	-	-	-
	80	98.0	98.0	106.2	85.0	117.5	60.8	92.5	92.5	99.3	79.8	109.8	57.7	-	-	-	-	-	-
	85	104.3	104.3	107.2	102.6	118.3	80.7	98.6	98.6	100.5	99.2	110.7	77.6	-	-	-	-	-	-
	90	110.7	110.7	110.8	110.8	118.9	98.5	104.8	104.8	104.9	104.9	111.3	95.1	-	-	-	-	-	-
4000	75	96.8	92.8	107.1	68.9	116.9	41.5	90.5	89.4	99.9	65.7	108.8	38.4	-	-	-	-	-	-
	80	101.2	101.2	107.8	88.6	119.0	64.0	95.4	95.4	100.8	85.1	111.2	60.9	-	-	-	-	-	-
	85	107.8	107.8	109.3	109.3	120.0	86.2	101.8	101.8	102.4	102.4	112.1	83.1	-	-	-	-	-	-
	90	114.4	114.4	114.6	114.6	120.7	105.5	108.2	108.2	108.4	108.4	113.0	102.1	-	-	-	-	-	-
4400	75	98.4	98.4	108.4	72.5	117.9	42.5	92.0	92.0	101.0	69.3	109.6	39.3	-	-	-	-	-	-
	80	104.0	104.0	109.3	93.9	120.3	67.2	98.0	98.0	102.1	90.3	112.3	64.0	-	-	-	-	-	-
	85	110.8	110.8	111.2	111.2	121.3	91.6	104.6	104.6	104.5	104.5	113.3	88.4	-	-	-	-	-	-
	90	117.7	117.7	117.9	117.9	122.3	112.6	111.2	111.2	111.3	111.3	114.5	109.1	-	-	-	-	-	-
4800	75	99.9	99.9	109.4	76.1	118.6	43.4	93.5	93.5	102.0	72.9	110.1	40.2	-	-	-	-	-	-
	80	106.4	106.4	110.5	99.2	121.4	70.4	100.2	100.2	103.2	95.5	113.2	67.2	-	-	-	-	-	-
	85	113.5	113.5	113.6	113.6	122.5	97.0	107.0	107.0	107.1	107.1	114.4	90.0	-	-	-	-	-	-
	90	120.5	120.5	120.7	120.7	123.7	119.6	113.8	113.8	113.9	113.9	115.8	115.8	-	-	-	-	-	-

Notes:

1. All capacities shown are gross and have not considered indoor fan heat. To obtain NET cooling capacity subtract indoor fan heat. For indoor fan heat formula, refer to appropriate airflow table notes.
2. MBh = Total gross capacity
3. SHC = Sensible heat capacity

Table 17. Gross cooling capacities — 12.5 tons standard efficiency, heat pump

CFM	Ent DB (° F)	Entering Wet Bulb Temp (°F)						Entering Wet Bulb Temp (°F)						Entering Wet Bulb Temp (°F)					
		61		67		73		61		67		73		61		67		73	
		MBh	SHC	MBh	SHC	MBh	SHC	MBh	SHC	MBh	SHC	MBh	SHC	MBh	SHC	MBh	SHC	MBh	SHC
		Ambient Temperature 85°F						Ambient Temperature 95°F						Ambient Temperature 105°F					
3750	75	136.7	107.4	153.6	84.0	171.2	59.5	128.5	102.6	144.6	79.2	161.2	54.6	119.8	97.5	135.1	74.1	150.7	49.6
	80	137.2	126.7	154.0	103.9	171.5	79.6	129.2	121.8	145.1	99.1	161.7	74.7	120.7	116.7	135.6	94.0	151.3	69.7
	85	141.0	141.0	154.3	123.7	171.9	99.5	134.1	134.1	145.5	118.9	162.2	94.7	126.7	126.7	136.0	113.9	151.8	89.7
	90	149.4	149.4	154.9	143.0	172.2	119.4	144.4	144.4	146.2	138.1	162.6	114.6	134.7	134.7	137.0	133.0	152.2	109.6
4500	75	142.0	119.2	159.1	91.1	176.4	61.7	133.4	114.3	149.6	86.1	165.9	56.8	124.3	108.4	139.6	81.0	154.8	51.6
	80	143.5	142.3	159.6	114.8	177.0	85.7	135.3	135.3	150.1	109.9	166.7	80.7	127.4	127.4	140.2	104.7	155.8	75.6
	85	151.6	151.6	160.1	138.5	177.5	109.5	144.1	144.1	150.8	132.9	167.3	104.6	136.1	136.1	140.6	127.4	156.4	99.5
	90	160.8	160.8	161.8	161.5	177.9	133.2	153.1	153.1	153.4	153.4	167.7	128.3	144.8	144.8	144.6	144.6	156.9	123.3
5000	75	144.9	126.2	161.9	95.6	179.0	63.0	136.1	121.0	152.2	90.6	168.3	58.1	126.8	115.7	141.9	85.4	157.0	52.9
	80	148.1	148.1	162.4	121.9	179.9	89.5	140.5	140.5	152.8	116.9	169.3	84.6	132.2	132.2	142.5	111.7	158.1	79.4
	85	157.6	157.6	162.8	147.0	180.4	115.9	149.7	149.7	153.9	142.2	169.9	111.0	141.2	141.2	143.4	136.6	158.8	105.8
	90	167.2	167.2	167.0	167.0	180.8	142.1	159.0	159.0	159.3	159.3	170.4	137.2	150.3	150.3	150.1	150.1	159.4	132.1
5500	75	147.5	133.4	164.3	100.0	181.2	64.3	138.5	128.2	154.4	94.9	170.2	59.3	129.1	122.9	143.8	89.7	158.7	54.1
	80	153.0	153.0	164.8	128.7	182.2	93.3	144.9	144.9	155.0	123.7	171.4	88.3	136.4	136.4	144.6	118.5	160.0	83.2
	85	162.8	162.8	166.2	156.5	182.8	122.2	154.6	154.6	156.7	151.4	172.0	117.2	145.7	145.7	146.6	146.1	160.7	112.0
	90	172.8	172.8	172.5	172.5	183.4	151.0	164.3	164.3	164.5	164.5	172.8	146.0	155.2	155.2	154.8	154.8	161.6	139.7
6000	75	149.8	140.5	166.3	104.2	183.1	65.5	140.7	135.3	156.1	99.1	171.9	60.5	131.3	129.9	145.5	93.9	160.2	55.3
	80	157.2	157.2	166.9	135.5	184.2	97.0	148.9	148.9	156.9	130.4	173.2	92.0	140.1	140.1	146.3	123.9	161.6	86.8
	85	167.4	167.4	168.3	165.2	184.8	128.3	158.8	158.8	158.8	158.8	173.9	123.3	149.7	149.7	149.4	149.4	162.3	118.2
	90	177.7	177.7	177.3	177.3	185.6	158.5	168.9	168.9	168.5	168.5	174.9	153.3	159.4	159.4	159.0	159.0	163.6	148.0
		Ambient Temperature 115°F						Ambient Temperature 125°F											
3750	75	110.5	92.3	125.0	68.9	139.5	44.4	100.6	86.1	114.2	63.3	127.7	38.9						
	80	111.6	111.4	125.5	88.8	140.3	64.5	102.7	102.7	114.8	83.3	128.6	59.0						
	85	118.8	118.8	126.0	108.6	140.9	84.5	110.2	110.2	115.0	102.2	129.2	79.1						
	90	126.6	126.6	127.3	127.3	141.3	104.4	117.8	117.8	117.7	117.7	129.7	99.0						

Table 17. Gross cooling capacities — 12.5 tons standard efficiency, heat pump (continued)

CFM	Ent DB (° F)	Entering Wet Bulb Temp (°F)						Entering Wet Bulb Temp (°F)						Entering Wet Bulb Temp (°F)					
		61		67		73		61		67		73		61		67		73	
		MBh	SHC	MBh	SHC	MBh	SHC	MBh	SHC	MBh	SHC	MBh	SHC	MBh	SHC	MBh	SHC	MBh	SHC
4500	75	114.7	102.9	129.0	75.6	143.2	46.3	104.5	97.1	117.7	70.0	130.9	40.8						
	80	119.0	119.0	129.6	99.4	144.3	70.3	110.0	110.0	118.4	93.8	132.1	64.8						
	85	127.4	127.4	130.2	121.9	145.0	94.2	118.1	118.1	119.3	116.2	132.8	88.7						
	90	135.9	135.9	136.1	136.1	145.5	118.0	126.3	126.3	126.1	126.1	133.5	111.5						
5000	75	117.0	110.2	131.1	80.0	145.1	47.6	106.7	104.3	119.5	74.4	138.3	44.6						
	80	123.4	123.4	131.7	106.3	146.3	74.1	114.0	114.0	120.3	99.5	133.9	68.6						
	85	132.2	132.2	132.9	131.2	147.0	100.5	122.5	122.5	122.3	122.3	134.6	95.0						
	90	141.0	141.0	140.7	140.7	147.8	125.7	131.0	131.0	130.7	130.7	135.6	120.0						
5500	75	119.2	117.3	132.8	84.2	147.3	48.9	108.9	108.9	121.0	78.6	133.8	43.2						
	80	127.3	127.3	133.6	111.9	148.0	77.8	117.5	117.5	122.1	106.0	135.4	72.3						
	85	136.3	136.3	136.5	136.5	148.7	106.7	126.2	126.2	126.4	126.4	136.1	101.2						
	90	145.5	145.5	145.1	145.1	149.9	134.1	135.0	135.0	134.6	134.6	137.5	128.4						
6000	75	121.4	121.4	134.2	88.4	147.9	49.9	111.7	111.7	122.3	82.7	134.8	44.3						
	80	130.6	130.6	134.8	117.9	149.5	81.4	120.5	120.5	123.6	112.3	136.6	75.9						
	85	139.9	139.9	139.6	139.6	150.2	112.8	129.5	129.5	129.7	129.7	137.4	105.7						
	90	149.4	149.4	148.9	148.9	151.7	142.4	138.6	138.6	138.8	138.8	139.4	136.6						

Notes:

1. All capacities shown are gross and have not considered indoor fan heat. To obtain NET cooling capacity subtract indoor fan heat. For indoor fan heat formula, refer to appropriate airflow table notes.
2. MBh = Total gross capacity
3. SHC = Sensible heat capacity

Table 18. Gross cooling capacities — 15 tons standard efficiency, heat pump

CFM	Ent DB (° F)	Entering Wet Bulb Temp (°F)						Entering Wet Bulb Temp (°F)						Entering Wet Bulb Temp (°F)					
		61		67		73		61		67		73		61		67		73	
		MBh	SHC	MBh	SHC	MBh	SHC	MBh	SHC	MBh	SHC	MBh	SHC	MBh	SHC	MBh	SHC	MBh	SHC
		Ambient Temperature 85°F						Ambient Temperature 95°F						Ambient Temperature 105°F					
4500	75	165.6	131.5	185.1	103.1	205.6	73.1	156.7	126.6	175.4	98.3	194.8	68.9	147.2	121.5	165.1	93.2	183.3	63.9
	80	166.4	154.4	185.7	127.1	206.4	97.8	157.7	149.4	176.1	122.2	195.9	93.1	148.6	144.2	165.9	117.2	184.8	88.1
	85	171.5	171.5	186.2	150.9	207.1	121.8	164.1	164.1	176.7	146.1	196.7	117.1	156.2	156.2	166.5	141.1	185.7	112.2
	90	181.4	181.4	187.1	173.7	207.6	145.7	173.8	173.8	177.9	168.8	197.3	141.1	165.7	165.7	168.1	163.7	186.3	136.1
5400	75	171.7	145.4	191.3	111.4	211.3	76.1	162.4	140.4	181.1	106.5	200.0	71.3	152.5	133.8	170.3	101.3	188.0	66.2
	80	173.9	172.7	192.0	139.9	212.7	104.9	165.2	165.2	181.9	135.0	201.7	100.1	156.8	156.8	171.2	129.8	190.0	95.1
	85	183.7	183.7	192.9	168.3	213.6	133.5	175.7	175.7	182.9	162.1	202.7	128.8	167.0	167.0	172.4	156.8	191.1	123.8
	90	194.5	194.5	195.5	195.5	214.1	162.0	186.2	186.2	186.5	186.5	203.3	157.2	177.4	177.4	177.7	177.7	191.9	152.3
6000	75	175.0	153.0	194.5	116.6	214.2	77.6	165.5	147.8	184.0	111.7	202.6	72.7	155.5	142.3	173.0	106.5	188.8	67.1
	80	179.4	179.4	195.3	148.1	215.9	109.5	171.1	171.1	184.9	143.1	204.6	104.6	162.3	162.3	173.9	138.0	192.7	99.6
	85	190.5	190.5	196.6	178.0	216.9	141.1	182.1	182.1	186.5	172.9	205.7	136.3	173.0	173.0	175.9	167.6	193.8	131.3
	90	201.7	201.7	202.0	202.0	216.5	172.1	193.1	193.1	193.4	193.4	206.5	167.8	183.8	183.8	184.1	184.1	194.8	162.8
6600	75	178.0	161.4	197.1	121.7	216.6	79.0	168.4	156.1	186.5	116.7	204.8	74.1	158.2	150.6	175.2	111.5	192.3	69.1
	80	184.9	184.9	198.0	156.1	218.6	113.9	176.3	176.3	187.4	151.2	207.1	109.0	167.1	167.1	176.2	146.0	195.0	104.0
	85	196.4	196.4	200.0	188.7	218.5	148.0	187.6	187.6	189.8	183.6	208.2	143.6	178.2	178.2	179.2	178.2	196.1	138.6
	90	208.0	208.0	208.4	208.4	219.4	182.5	199.0	199.0	199.3	199.3	209.3	178.1	189.3	189.3	189.6	189.6	197.4	170.9
7200	75	180.7	169.6	199.4	126.7	218.7	80.4	171.0	164.3	188.5	121.6	206.6	75.5	160.8	158.7	177.0	116.4	193.9	70.4
	80	189.7	189.7	200.4	164.0	220.9	118.2	180.8	180.8	189.6	156.9	209.2	113.3	170.9	170.9	178.4	151.4	196.8	108.3
	85	201.6	201.6	203.2	199.2	220.8	155.2	192.5	192.5	193.1	193.1	210.3	150.8	182.7	182.7	182.8	182.8	198.0	145.8
	90	213.6	213.6	213.9	213.9	222.0	190.5	204.2	204.2	204.5	204.5	211.8	185.9	194.2	194.2	194.5	194.5	199.9	180.6
		Ambient Temperature 115°F						Ambient Temperature 125°F											
4500	75	137.2	116.1	154.2	88.0	171.3	58.7	126.4	109.3	142.6	82.5	158.4	53.3						
	80	138.9	138.8	155.0	111.9	173.0	83.0	129.5	129.5	143.5	106.5	160.5	77.7						
	85	147.7	147.7	155.8	135.8	174.0	107.1	138.6	138.6	144.4	129.0	161.5	101.8						
	90	157.1	157.1	157.8	157.8	174.7	131.1	147.8	147.8	148.1	148.1	162.3	125.8						
5400	75	142.1	128.1	158.9	96.0	175.4	61.0	131.1	122.2	146.8	90.4	162.0	55.5						
	80	147.8	147.8	159.9	124.5	177.8	90.0	138.1	138.1	147.8	119.0	164.7	84.6						
	85	157.8	157.8	161.4	151.2	178.9	118.6	148.0	148.0	149.8	145.5	165.9	113.3						
	90	168.0	168.0	168.3	168.3	179.7	147.2	157.8	157.8	158.1	158.1	166.9	140.0						

Table 18. Gross cooling capacities — 15 tons standard efficiency, heat pump (continued)

CFM	Ent DB (° F)	Entering Wet Bulb Temp (°F)						Entering Wet Bulb Temp (°F)						Entering Wet Bulb Temp (°F)					
		61		67		73		61		67		73		61		67		73	
		MBh	SHC	MBh	SHC	MBh	SHC	MBh	SHC	MBh	SHC	MBh	SHC	MBh	SHC	MBh	SHC	MBh	SHC
6000	75	144.9	136.5	161.3	101.1	177.5	62.4	133.8	130.5	148.9	95.5	163.8	56.9						
	80	152.9	152.9	162.3	132.7	180.2	94.4	142.8	142.8	150.1	124.9	166.8	89.0						
	85	163.4	163.4	164.7	162.0	181.3	126.1	153.1	153.1	153.3	153.3	168.1	120.7						
	90	173.9	173.9	174.2	174.2	182.5	155.6	163.3	163.3	163.6	163.6	169.5	149.9						
6600	75	147.6	144.8	163.3	106.1	177.6	63.2	136.5	136.5	150.6	100.5	165.1	58.2						
	80	157.4	157.4	164.5	138.3	182.2	98.8	146.9	146.9	152.2	132.3	168.6	93.4						
	85	168.2	168.2	168.3	168.3	183.4	133.4	157.5	157.5	157.7	157.7	169.9	128.0						
	90	179.1	179.1	179.3	179.3	185.0	165.4	168.1	168.1	168.3	168.3	171.9	159.6						
7200	75	150.2	150.2	164.9	111.0	180.4	65.0	139.7	139.7	152.0	105.3	166.0	59.5						
	80	161.3	161.3	166.6	145.6	183.8	103.0	150.5	150.5	154.1	139.5	170.0	97.6						
	85	172.4	172.4	172.6	172.6	185.2	140.6	161.3	161.3	161.5	161.5	171.5	135.1						
	90	183.6	183.6	183.8	183.8	187.4	175.0	172.2	172.2	171.7	171.7	174.2	169.2						

Notes:

1. All capacities shown are gross and have not considered indoor fan heat. To obtain NET cooling capacity subtract indoor fan heat. For indoor fan heat formula, refer to appropriate airflow table notes.
2. MBh = Total gross capacity
3. SHC = Sensible heat capacity

Table 19. Gross cooling capacities — 17.5 tons standard efficiency, heat pump

CFM	Ent DB (° F)	Entering Wet Bulb Temp (°F)						Entering Wet Bulb Temp (°F)						Entering Wet Bulb Temp (°F)					
		61		67		73		61		67		73		61		67		73	
		MBh	SHC	MBh	SHC	MBh	SHC	MBh	SHC	MBh	SHC	MBh	SHC	MBh	SHC	MBh	SHC	MBh	SHC
		Ambient Temperature 85°F						Ambient Temperature 95°F						Ambient Temperature 105°F					
5250	75	190.0	151.5	210.9	118.3	232.1	83.7	180.3	146.3	200.3	113.0	220.1	78.5	170.3	140.8	189.3	107.7	206.0	72.0
	80	191.2	177.4	211.9	145.9	234.1	111.7	181.9	172.0	201.5	140.7	222.5	106.6	172.2	166.4	190.5	135.3	208.7	100.6
	85	197.2	197.2	212.7	173.3	235.3	139.5	189.1	189.1	202.3	168.2	222.0	133.6	180.5	180.5	190.2	162.3	210.1	128.4
	90	208.2	208.2	214.1	199.2	236.2	167.0	199.9	199.9	204.1	193.8	222.9	161.2	191.1	191.1	192.4	187.7	211.0	155.9
6300	75	196.6	167.2	217.5	127.5	238.1	86.4	186.4	159.6	206.4	122.2	223.6	80.4	176.0	153.8	194.8	116.7	210.6	75.1
	80	199.6	197.8	218.7	160.3	240.9	119.7	190.1	190.1	207.6	155.0	226.7	113.7	180.9	180.9	196.1	149.6	214.1	108.4
	85	210.4	210.4	219.9	190.9	242.3	152.7	201.5	201.5	209.1	185.3	228.2	146.7	192.2	192.2	196.5	178.9	215.6	141.3
	90	222.4	222.4	223.5	223.5	241.0	184.5	213.2	213.2	213.5	213.5	229.1	179.4	202.3	202.3	202.6	202.6	216.7	174.1
7000	75	200.1	174.8	221.0	133.4	239.0	87.3	189.9	169.0	209.5	128.0	226.2	82.0	179.3	163.0	197.6	122.5	212.8	76.6
	80	205.3	205.3	222.2	169.5	242.2	124.0	196.3	196.3	210.8	164.2	229.8	118.8	186.8	186.8	199.0	158.7	216.8	113.4
	85	217.7	217.7	224.1	203.0	243.6	160.3	208.4	208.4	213.1	197.4	231.3	155.1	198.5	198.5	200.2	190.8	218.4	149.7
	90	228.7	228.7	230.6	230.6	244.6	196.4	219.1	219.1	220.9	220.9	232.5	191.3	208.9	208.9	209.2	209.2	219.7	182.7
7700	75	203.5	184.0	223.8	139.1	241.4	88.9	193.0	178.1	212.1	133.7	228.3	83.5	182.2	172.0	199.9	128.1	214.5	77.9
	80	211.3	211.3	225.1	178.5	245.0	128.9	201.8	201.8	213.6	173.2	232.3	123.7	191.9	191.9	201.5	167.7	219.0	118.3
	85	224.0	224.0	227.9	214.8	246.5	168.5	214.3	214.3	216.8	209.1	233.9	163.3	204.0	204.0	203.7	202.4	220.8	157.9
	90	235.3	235.3	237.3	237.3	247.8	208.0	225.2	225.2	227.2	227.2	235.4	202.9	214.6	214.6	214.9	214.9	222.6	193.4
8400	75	206.5	193.0	226.2	144.6	243.3	90.3	195.9	187.0	214.2	139.2	229.9	85.0	185.0	180.8	201.8	133.6	215.8	79.5
	80	216.4	216.4	227.7	187.4	247.3	133.7	206.6	206.6	215.9	178.2	234.4	128.4	196.3	196.3	203.8	172.0	220.9	123.0
	85	229.6	229.6	231.5	226.4	248.9	176.6	219.4	219.4	220.3	220.3	236.1	171.3	208.8	208.8	207.4	207.4	222.7	165.9
	90	241.1	241.0	243.2	243.2	250.6	215.6	230.6	230.6	232.8	232.8	238.1	209.9	219.6	219.6	219.8	219.8	225.1	203.9
		Ambient Temperature 115°F						Ambient Temperature 125°F											
5250	75	159.9	135.3	177.9	102.2	194.7	67.7	148.9	127.2	165.8	96.5	181.2	62.1						
	80	162.2	160.6	179.1	129.8	197.9	95.9	152.0	152.0	167.1	124.1	184.7	90.3						
	85	171.5	171.5	180.1	155.3	199.4	123.7	161.9	161.9	168.3	149.2	186.3	118.1						
	90	181.8	181.8	182.8	182.6	200.4	151.3	171.9	171.9	172.2	172.2	185.6	145.0						
6300	75	165.2	147.7	182.8	111.1	198.9	70.2	154.0	141.3	170.1	105.4	192.4	67.3						
	80	171.3	171.3	184.1	144.0	202.9	103.7	161.2	161.2	171.6	138.2	189.0	98.0						
	85	182.3	182.3	186.3	173.6	204.6	136.7	171.8	171.8	174.1	167.4	190.9	131.0						
	90	192.1	192.1	193.7	193.7	205.8	169.5	181.3	181.3	182.9	182.9	192.2	160.4						
7000	75	168.3	156.8	185.2	116.9	200.7	71.7	156.8	150.3	172.2	111.0	194.1	68.7						
	80	176.8	176.8	186.7	149.7	205.4	108.7	166.2	166.2	174.0	143.2	191.2	103.0						
	85	188.2	188.2	189.9	185.4	207.2	145.0	177.2	177.2	177.8	177.8	193.2	139.4						
	90	198.2	198.2	200.0	200.0	208.8	177.6	188.4	188.4	188.6	188.6	195.1	171.3						

Table 19. Gross cooling capacities — 17.5 tons standard efficiency, heat pump (continued)

CFM	Ent DB (° F)	Entering Wet Bulb Temp (°F)						Entering Wet Bulb Temp (°F)						Entering Wet Bulb Temp (°F)					
		61		67		73		61		67		73		61		67		73	
		MBh	SHC	MBh	SHC	MBh	SHC	MBh	SHC	MBh	SHC	MBh	SHC	MBh	SHC	MBh	SHC	MBh	SHC
7700	75	171.1	165.7	187.3	122.4	202.1	73.1	159.5	159.1	174.0	116.6	186.9	67.3						
	80	181.4	181.4	189.2	157.8	207.4	113.5	170.4	170.4	176.3	151.1	192.9	107.8						
	85	191.9	191.9	193.6	193.6	209.4	153.2	181.8	181.8	182.1	182.1	195.1	147.5						
	90	205.2	205.2	205.4	205.4	211.5	188.3	193.3	193.3	193.6	193.6	197.7	181.9						
8400	75	173.8	173.8	188.9	127.9	203.0	74.5	162.4	162.4	175.4	121.9	187.5	68.6						
	80	185.5	185.5	191.4	165.6	209.1	118.3	174.1	174.1	178.3	158.9	194.4	112.5						
	85	156.6	156.6	197.9	197.9	211.2	161.2	185.8	185.8	186.0	186.0	196.7	155.5						
	90	209.9	209.9	210.1	210.1	214.1	198.7	197.6	197.6	197.8	197.8	200.1	192.2						

Notes:

1. All capacities shown are gross and have not considered indoor fan heat. To obtain NET cooling capacity subtract indoor fan heat. For indoor fan heat formula, refer to appropriate airflow table notes.
2. MBh = Total gross capacity
3. SHC = Sensible heat capacity

Table 20. Gross cooling capacities — 20 tons standard efficiency, heat pump

CFM	Ent DB (° F)	Entering Wet Bulb Temp (°F)						Entering Wet Bulb Temp (°F)						Entering Wet Bulb Temp (°F)					
		61		67		73		61		67		73		61		67		73	
		MBh	SHC	MBh	SHC	MBh	SHC	MBh	SHC	MBh	SHC	MBh	SHC	MBh	SHC	MBh	SHC	MBh	SHC
		Ambient Temperature 85°F						Ambient Temperature 95°F						Ambient Temperature 105°F					
6000	75	220.7	177.3	246.6	138.5	272.3	97.8	208.9	170.9	233.7	132.1	257.0	91.1	196.3	164.2	219.9	125.4	242.3	84.8
	80	222.5	208.5	247.7	171.2	274.4	130.9	211.1	201.9	234.9	164.9	260.4	124.7	198.9	195.0	221.1	158.2	245.3	118.1
	85	230.8	230.8	248.7	203.9	274.7	163.4	220.9	220.9	236.1	197.6	260.9	157.3	210.2	210.2	222.3	189.3	246.8	151.1
	90	244.3	244.3	250.0	234.7	276.5	196.5	234.2	234.2	238.4	228.6	262.8	190.4	223.2	223.2	225.3	221.8	247.9	183.9
7200	75	228.9	194.8	254.9	150.0	279.8	101.1	216.7	188.0	241.3	143.5	264.6	94.8	203.6	180.7	226.7	136.7	248.3	88.0
	80	233.2	233.2	256.2	189.1	282.8	140.8	222.2	222.2	242.7	182.6	268.1	134.5	210.7	210.7	228.2	175.8	252.2	127.8
	85	247.3	247.3	257.2	225.8	284.2	180.1	236.5	236.5	244.9	219.5	269.6	173.8	224.7	224.7	230.0	212.0	252.9	166.8
	90	262.1	262.1	262.0	262.0	285.4	219.2	251.0	251.0	250.8	250.8	271.0	213.0	238.9	238.9	238.6	238.6	255.3	206.4
8000	75	233.7	206.8	259.1	157.3	283.6	103.2	221.2	199.8	245.2	150.8	268.0	96.1	207.7	192.4	230.1	143.9	251.2	90.0
	80	241.2	241.2	259.8	200.2	287.1	147.2	230.1	230.1	246.8	194.1	271.9	140.8	218.1	218.1	231.8	184.4	255.6	134.1
	85	256.4	256.4	262.5	241.0	288.5	190.6	245.1	245.1	249.1	234.2	273.5	184.3	232.7	232.7	235.6	227.4	257.4	177.6
	90	270.3	270.3	271.6	271.6	290.1	234.0	258.7	258.7	259.9	259.9	275.3	227.8	245.9	245.9	247.1	247.1	259.4	218.0
8800	75	237.8	218.4	262.6	164.4	296.3	108.8	225.1	211.4	248.3	157.8	270.7	98.7	211.5	203.8	232.9	150.9	253.4	91.9
	80	248.5	248.5	263.5	211.6	290.6	153.3	237.0	237.0	250.2	202.3	275.1	147.0	224.5	224.5	235.3	194.8	258.5	140.2
	85	264.4	264.4	267.3	255.9	292.1	200.9	252.6	252.6	253.9	249.1	276.9	194.6	239.7	239.7	239.6	239.6	260.4	187.9
	90	278.6	278.6	280.0	280.0	294.3	245.7	267.4	267.4	267.8	267.8	279.3	238.9	254.0	254.0	254.4	254.4	263.2	231.7
9600	75	241.7	229.9	265.6	171.4	288.1	106.7	228.8	222.7	250.9	164.8	272.8	100.6	215.1	215.1	235.2	157.8	254.9	93.6
	80	255.0	255.0	266.7	219.3	293.5	159.4	243.0	243.0	253.5	212.6	277.7	153.0	230.1	230.1	238.3	205.0	260.8	146.2
	85	271.4	271.4	272.0	270.6	295.3	211.2	259.1	259.1	258.7	258.7	279.7	204.8	244.1	244.1	246.1	246.1	263.0	198.1
	90	285.9	285.9	287.4	287.4	298.2	259.4	274.3	274.3	274.7	274.7	282.8	252.4	259.6	259.5	260.8	260.8	266.6	245.1
		Ambient Temperature 115°F						Ambient Temperature 125°F											
6000	75	182.7	155.2	205.0	118.4	225.6	77.8	168.4	147.2	189.0	111.0	207.7	70.5						
	80	186.1	186.1	206.3	151.2	229.1	111.2	173.8	173.8	190.4	143.8	211.7	104.0						
	85	198.5	198.5	207.8	181.9	230.7	144.2	185.9	185.9	192.3	174.1	213.3	137.0						
	90	211.3	211.3	211.2	211.2	231.8	177.0	198.3	198.3	198.2	198.2	214.6	169.8						
7200	75	189.6	173.0	211.0	129.5	230.7	80.9	174.7	164.8	194.1	121.9	211.1	73.2						
	80	198.4	198.4	211.8	165.8	235.2	120.9	185.0	185.0	196.0	157.9	216.9	113.5						
	85	212.0	212.0	215.0	204.5	236.9	160.2	198.2	198.2	199.7	196.8	218.8	152.9						
	90	225.8	225.8	225.5	225.5	238.6	196.7	211.6	211.6	211.2	211.2	220.9	188.7						
8000	75	193.5	184.5	214.0	136.6	233.0	82.8	178.4	176.2	196.6	129.0	213.3	75.3						
	80	205.2	205.2	215.4	176.3	238.2	127.1	191.1	191.1	199.3	168.3	219.4	119.7						
	85	219.4	219.4	220.5	219.7	240.2	170.6	204.9	204.9	205.2	205.2	221.6	163.3						
	90	233.8	233.8	233.3	233.3	242.6	210.4	218.8	218.8	218.3	218.3	223.6	202.0						
8800	75	197.1	195.9	216.4	143.6	233.7	84.3	182.2	182.2	198.5	135.9	214.2	77.0						
	80	211.0	211.0	218.5	186.5	240.6	133.1	196.4	196.4	202.2	178.4	221.4	125.7						
	85	225.8	225.8	225.3	225.3	242.8	180.9	210.7	210.7	210.2	210.2	224.0	168.6						
	90	240.7	240.7	240.0	240.0	246.0	224.0	225.1	225.1	224.4	224.4	226.8	215.4						

Table 20. Gross cooling capacities — 20 tons standard efficiency, heat pump (continued)

CFM	Ent DB (° F)	Entering Wet Bulb Temp (°F)						Entering Wet Bulb Temp (°F)						Entering Wet Bulb Temp (°F)					
		61		67		73		61		67		73		61		67		73	
		MBh	SHC	MBh	SHC	MBh	SHC	MBh	SHC	MBh	SHC	MBh	SHC	MBh	SHC	MBh	SHC	MBh	SHC
9600	75	201.0	201.0	218.3	150.4	234.7	86.0	186.5	186.5	200.1	142.6	214.1	78.3						
	80	216.1	216.1	222.0	197.0	242.6	139.1	201.0	201.0	204.7	188.3	223.0	131.6						
	85	230.5	230.5	230.8	230.8	244.0	185.6	215.7	215.7	216.0	216.0	226.2	177.5						
	90	246.7	246.7	245.9	245.9	249.3	237.3	230.5	230.5	229.7	229.7	230.0	228.6						

Notes:

1. All capacities shown are gross and have not considered indoor fan heat. To obtain NET cooling capacity subtract indoor fan heat. For indoor fan heat formula, refer to appropriate airflow table notes.
2. MBh = Total gross capacity
3. SHC = Sensible heat capacity

Table 21. Gross cooling capacities — 25 tons standard efficiency, heat pump

CFM	Ent DB (° F)	Entering Wet Bulb Temp (°F)						Entering Wet Bulb Temp (°F)						Entering Wet Bulb Temp (°F)					
		61		67		73		61		67		73		61		67		73	
		MBh	SHC	MBh	SHC	MBh	SHC	MBh	SHC	MBh	SHC	MBh	SHC	MBh	SHC	MBh	SHC	MBh	SHC
		Ambient Temperature 85°F						Ambient Temperature 95°F						Ambient Temperature 105°F					
7500	75	246.3	201.7	273.9	155.8	303.7	108.7	233.3	194.6	259.6	148.9	287.9	101.8	219.2	187.2	244.2	141.5	271.1	94.6
	80	248.9	239.1	274.5	193.7	304.1	146.8	236.3	232.0	260.3	186.8	288.4	140.0	223.1	223.1	245.0	179.4	271.7	132.8
	85	259.8	259.8	275.4	231.5	304.7	184.8	248.6	248.6	261.4	224.7	289.1	178.0	236.3	236.3	246.3	217.4	272.5	170.8
	90	274.3	274.3	278.4	268.9	305.2	222.7	262.8	262.8	265.0	262.0	289.7	215.9	250.2	250.2	250.9	250.9	273.2	208.7
9000	75	254.4	222.3	281.7	167.9	311.5	112.2	240.9	215.2	266.7	160.8	295.0	105.3	226.3	207.7	250.7	153.3	277.4	98.0
	80	260.3	260.3	282.4	212.5	312.0	157.2	248.6	248.6	267.5	205.5	295.7	150.3	235.7	235.7	251.5	198.1	278.2	143.0
	85	275.8	275.8	284.4	257.5	312.7	202.0	263.6	263.6	269.9	250.6	296.5	195.1	250.4	250.4	254.4	241.7	279.1	187.9
	90	291.4	291.4	291.6	291.6	313.4	246.7	278.9	278.9	279.3	279.3	297.4	239.9	265.3	265.3	265.7	265.7	280.3	232.8
10000	75	259.0	235.4	285.8	175.5	315.5	114.4	245.2	226.8	270.4	168.3	298.6	107.4	230.5	219.0	254.0	160.8	280.5	100.5
	80	268.6	268.6	286.6	224.5	316.1	163.8	256.2	256.2	271.3	217.4	299.4	156.8	242.8	242.8	255.1	210.0	281.6	149.5
	85	284.6	284.6	289.7	272.7	316.9	213.0	271.8	271.8	275.0	265.5	300.3	206.1	258.0	258.0	259.5	257.9	282.5	198.8
	90	300.8	300.8	301.2	301.2	318.0	262.2	287.7	287.7	288.1	288.1	301.7	255.4	273.5	273.5	273.8	273.8	284.3	248.2
11000	75	263.1	246.6	289.2	182.8	318.9	116.5	249.2	239.2	273.5	175.6	301.6	109.4	234.4	231.3	256.9	168.1	283.2	102.0
	80	275.6	275.6	290.1	236.1	319.6	170.2	262.7	262.7	274.7	229.0	302.6	163.1	248.9	248.9	258.3	221.6	284.4	155.8
	85	292.1	292.1	294.6	288.5	320.4	223.7	278.9	278.9	280.0	280.0	303.5	216.7	264.6	264.6	264.7	264.7	285.4	209.4
	90	308.9	308.9	309.3	309.3	322.1	277.3	295.3	295.3	295.6	295.6	305.5	270.4	280.5	280.5	280.8	280.8	287.9	263.2
12000	75	267.0	258.6	292.1	189.8	321.7	118.5	253.0	251.1	276.2	182.6	304.1	111.4	238.3	238.3	259.3	175.0	285.4	103.9
	80	281.7	281.7	293.4	247.4	322.6	176.3	268.4	268.4	277.8	240.3	305.2	169.3	254.2	254.2	261.2	232.8	286.9	161.9
	85	298.7	298.7	299.5	299.5	323.4	233.9	285.1	285.1	285.1	285.1	306.2	226.9	270.3	270.3	270.6	270.6	287.9	219.6
	90	316.0	316.0	316.4	316.4	325.8	291.9	301.9	301.9	302.3	302.3	309.1	285.1	286.6	286.6	284.4	284.4	291.4	275.3
		Ambient Temperature 115°F						Ambient Temperature 125°F											
7500	75	204.2	179.4	227.8	133.8	253.1	87.1	188.1	171.2	210.2	125.7	233.7	79.1						
	80	209.7	209.7	228.6	171.7	253.8	125.2	195.8	195.8	211.1	163.7	234.8	117.4						
	85	223.1	223.1	230.2	209.8	254.7	163.3	208.9	208.9	213.1	200.4	235.7	155.5						
	90	236.7	236.7	237.1	237.1	255.5	201.3	222.0	222.0	222.4	222.4	236.7	193.5						
9000	75	210.9	198.2	233.6	145.5	258.6	90.3	194.6	189.6	215.3	137.4	238.5	82.4						
	80	221.8	221.8	234.6	190.3	259.7	135.4	206.9	206.9	216.5	182.2	240.0	127.5						
	85	236.2	236.2	238.1	233.8	260.7	180.3	220.8	220.8	221.2	221.2	241.0	172.4						
	90	250.6	250.6	251.0	251.0	262.1	225.3	234.8	234.8	235.1	235.1	242.8	217.5						
10000	75	215.0	210.8	236.6	153.0	261.3	92.4	198.7	198.7	218.0	144.8	241.0	84.4						
	80	228.4	228.4	237.9	202.2	262.7	141.9	212.9	212.9	219.6	194.1	242.6	133.9						
	85	243.2	243.2	243.4	243.4	263.7	191.2	227.2	227.2	227.5	227.5	243.7	183.2						
	90	258.2	258.2	258.5	258.5	265.9	240.7	241.7	241.7	242.0	242.0	246.4	230.5						
11000	75	218.9	218.9	239.1	160.2	263.7	94.3	203.4	203.4	220.2	151.9	243.1	86.3						
	80	234.0	234.0	240.9	213.8	265.3	148.2	218.0	218.0	222.4	203.2	244.9	140.2						
	85	249.2	249.2	249.5	249.5	266.3	201.7	232.7	232.7	233.0	233.0	246.0	193.8						
	90	264.7	264.7	265.0	265.0	269.4	253.3	247.6	247.6	247.8	247.8	249.9	244.9						
12000	75	223.2	223.2	241.3	167.1	265.7	96.2	207.4	207.4	222.1	158.8	244.8	88.1						
	80	238.8	238.8	243.6	222.6	267.4	154.2	222.4	222.4	225.0	213.9	246.8	146.2						
	85	254.5	254.5	253.7	253.7	268.5	211.9	237.5	237.5	237.7	237.7	248.1	204.0						
	90	270.3	270.3	270.5	270.5	272.8	267.3	-	-	-	-	-	-						

Table 21. Gross cooling capacities — 25 tons standard efficiency, heat pump (continued)

CFM	Ent DB (° F)	Entering Wet Bulb Temp (°F)						Entering Wet Bulb Temp (°F)						Entering Wet Bulb Temp (°F)					
		61		67		73		61		67		73		61		67		73	
		MBh	SHC	MBh	SHC	MBh	SHC	MBh	SHC	MBh	SHC	MBh	SHC	MBh	SHC	MBh	SHC	MBh	SHC

Notes:

1. All capacities shown are gross and have not considered indoor fan heat. To obtain NET cooling capacity subtract indoor fan heat. For indoor fan heat formula, refer to appropriate airflow table notes.
2. MBh = Total gross capacity
3. SHC = Sensible heat capacity

Table 22. Gross cooling capacities — 3 tons high efficiency, heat pump

CFM	Ent DB (° F)	Entering Wet Bulb Temp (°F)						Entering Wet Bulb Temp (°F)						Entering Wet Bulb Temp (°F)					
		61		67		73		61		67		73		61		67		73	
		MBh	SHC	MBh	SHC	MBh	SHC	MBh	SHC	MBh	SHC	MBh	SHC	MBh	SHC	MBh	SHC	MBh	SHC
		Ambient Temperature 85°F						Ambient Temperature 95°F						Ambient Temperature 105°F					
900	75	32.6	26.2	36.9	20.5	41.5	14.6	30.6	25.1	34.7	19.4	39.2	13.5	28.6	23.9	32.5	18.2	36.7	12.3
	80	32.6	30.7	36.9	25.4	41.6	19.6	30.6	29.5	34.8	24.3	39.2	18.5	28.5	28.3	32.6	23.2	36.8	17.3
	85	31.7	31.7	37.0	30.4	41.6	24.5	29.5	29.5	34.9	29.3	39.3	23.5	28.0	28.0	32.7	28.1	36.9	22.3
	90	32.9	32.9	37.0	34.8	41.7	29.5	31.4	31.4	34.8	33.7	39.4	28.4	29.8	29.8	32.5	32.5	37.0	27.3
1080	75	33.9	29.2	38.2	22.3	42.9	15.1	31.8	28.1	35.9	21.2	40.4	14.0	29.7	26.9	33.6	20.0	37.7	12.9
	80	33.8	33.8	38.3	28.2	43.0	21.1	31.6	31.6	36.1	27.1	40.5	20.0	29.4	29.4	33.7	26.0	37.9	18.9
	85	33.7	33.7	38.4	34.2	43.1	27.1	32.1	32.1	36.2	32.5	40.7	26.0	30.4	30.4	33.8	31.3	38.1	24.9
	90	35.8	35.8	38.2	38.2	43.2	33.1	34.1	34.1	35.9	35.9	40.8	32.0	32.4	32.4	33.4	33.4	38.2	30.9
1200	75	34.6	31.2	38.9	23.5	43.6	15.5	32.5	30.0	36.6	22.3	41.0	14.4	30.2	28.3	34.2	21.1	38.3	13.2
	80	34.4	34.4	39.0	30.1	43.7	22.2	32.2	32.2	36.7	28.9	41.2	21.1	29.8	29.8	34.3	27.8	38.5	19.9
	85	35.3	35.3	39.1	36.1	43.9	28.8	33.6	33.6	36.9	34.9	41.4	27.7	31.8	31.8	34.4	33.7	38.7	26.6
	90	37.4	37.4	38.8	38.8	44.0	35.4	35.7	35.7	36.5	36.5	41.5	34.3	33.9	33.9	33.9	33.9	38.8	33.2
1320	75	35.1	33.1	39.5	24.6	44.2	15.8	33.0	31.4	37.1	23.5	41.5	14.7	30.7	30.2	34.7	22.3	38.7	13.5
	80	34.9	34.9	39.7	31.9	44.3	23.2	32.6	32.6	37.3	30.7	41.8	22.1	30.8	30.8	34.8	29.6	39.0	20.9
	85	36.6	36.6	39.8	38.5	44.5	30.5	34.9	34.9	37.4	37.3	41.9	29.4	33.0	33.0	34.9	34.9	39.2	28.2
	90	38.9	38.9	39.4	39.4	44.6	37.8	37.1	37.1	37.2	37.2	42.1	36.7	35.2	35.2	35.2	35.2	39.4	34.8
1440	75	35.9	34.6	40.0	25.7	44.6	16.1	33.5	33.3	37.6	24.6	41.9	15.0	31.1	31.1	35.1	23.4	39.1	13.8
	80	35.5	35.5	40.2	33.7	44.9	24.2	33.7	33.7	37.8	32.5	42.2	23.0	31.8	31.8	35.3	31.3	39.5	21.9
	85	37.9	37.9	40.3	40.3	45.1	32.2	36.0	36.0	37.9	37.9	42.5	31.0	34.0	34.0	35.3	35.3	39.7	29.9
	90	40.2	40.2	40.3	40.3	45.2	40.1	38.4	38.4	38.4	38.4	42.6	38.2	36.3	36.3	36.4	36.4	39.9	37.0
		Ambient Temperature 115°F						Ambient Temperature 125°F											
900	75	26.4	22.7	30.1	17.0	34.0	11.1	24.1	21.1	27.5	15.8	31.1	9.9						
	80	26.2	26.2	30.2	22.0	34.1	16.2	23.7	23.7	27.6	20.8	31.3	14.9						
	85	26.3	26.3	30.3	27.0	34.2	21.2	24.5	24.5	27.8	25.2	31.5	19.9						
	90	28.1	28.1	30.0	30.0	34.4	26.1	26.2	26.2	27.3	27.3	31.6	24.9						
1080	75	27.4	25.2	31.0	18.8	34.9	11.7	24.9	23.8	28.4	17.5	31.9	10.4						
	80	26.9	26.9	31.2	24.8	35.1	17.7	24.7	24.7	28.5	23.5	32.2	16.5						
	85	28.5	28.5	31.3	30.1	35.3	23.7	26.6	26.6	28.6	28.6	32.4	22.5						
	90	30.5	30.5	30.8	30.8	35.5	29.7	28.5	28.5	28.5	28.5	32.5	27.8						
1200	75	27.9	27.0	31.6	19.9	35.4	12.0	25.3	25.3	28.8	18.7	32.8	10.9						
	80	27.8	27.8	31.7	26.6	35.7	18.7	25.8	25.8	29.0	24.6	32.7	17.4						
	85	29.8	29.8	31.8	31.8	35.9	25.4	27.7	27.7	29.0	29.0	32.9	24.1						
	90	31.9	31.9	31.9	31.9	36.0	31.3	29.7	29.7	29.7	29.7	33.1	29.9						
1320	75	28.3	28.3	32.0	21.0	35.8	12.3	25.7	25.7	29.2	19.8	32.6	11.0						
	80	28.8	28.8	32.2	28.3	36.1	19.7	26.7	26.7	29.4	26.3	33.1	18.4						
	85	30.9	30.9	32.2	32.2	36.4	27.0	28.7	28.7	29.4	29.4	33.3	25.8						
	90	33.1	33.1	33.1	33.1	36.5	33.5	30.8	30.8	30.8	30.8	33.5	32.1						
1440	75	28.6	28.6	32.4	22.2	36.1	12.6	26.0	26.0	29.5	20.9	32.9	11.3						
	80	29.7	29.7	32.6	29.3	36.5	20.7	27.5	27.5	29.8	28.0	33.4	19.4						
	85	31.9	31.9	32.6	32.6	36.8	28.7	29.6	29.6	29.6	29.6	33.7	27.4						
	90	34.1	34.1	34.2	34.2	36.9	35.7	31.8	31.8	31.8	31.8	33.8	33.8						

Notes:

1. All capacities shown are gross and have not considered indoor fan heat. To obtain NET cooling capacity subtract indoor fan heat. For indoor fan heat formula, refer to appropriate airflow table notes.
2. MBh = Total gross capacity
3. SHC = Sensible heat capacity

Table 23. Gross cooling capacities — 4 tons high efficiency, heat pump

CFM	Ent DB (° F)	Entering Wet Bulb Temp (°F)						Entering Wet Bulb Temp (°F)						Entering Wet Bulb Temp (°F)					
		61		67		73		61		67		73		61		67		73	
		MBh	SHC	MBh	SHC	MBh	SHC	MBh	SHC	MBh	SHC	MBh	SHC	MBh	SHC	MBh	SHC	MBh	SHC
		Ambient Temperature 85°F						Ambient Temperature 95°F						Ambient Temperature 105°F					
1200	75	44.1	34.9	49.9	27.5	55.7	19.6	41.6	33.5	47.2	26.1	52.7	18.2	39.0	32.1	44.4	24.7	49.5	16.8
	80	44.1	41.1	49.7	33.8	55.8	26.1	41.7	39.7	47.0	32.5	52.8	24.7	39.1	38.2	44.5	31.2	49.7	23.3
	85	44.9	44.9	49.8	40.3	55.9	32.6	42.9	42.9	47.4	39.0	52.9	31.2	40.7	40.7	44.3	37.5	49.8	29.8
	90	47.5	47.5	49.8	46.4	55.9	39.1	45.5	45.5	47.5	45.2	53.0	37.7	43.3	43.3	44.4	43.6	49.9	36.3
1440	75	45.8	38.9	51.8	29.9	57.5	20.3	43.2	37.2	48.6	28.3	54.3	18.9	40.5	35.7	45.9	27.0	51.0	17.5
	80	46.0	46.0	51.6	37.5	57.7	28.2	43.5	43.5	49.1	36.2	54.5	26.8	41.1	41.1	45.8	34.6	51.2	25.3
	85	48.4	48.4	52.0	45.1	57.8	36.0	46.2	46.2	49.2	43.7	54.7	34.6	43.9	43.9	45.9	42.0	51.4	33.1
	90	51.3	51.3	51.9	51.9	57.9	43.7	49.1	49.1	49.5	49.5	54.8	42.3	46.7	46.7	47.1	47.1	51.5	40.9
1600	75	46.7	41.2	52.8	31.4	58.4	20.8	44.1	39.7	49.8	30.0	55.2	19.3	41.3	38.2	46.8	28.5	51.8	17.9
	80	47.3	47.3	52.9	40.0	58.7	29.5	45.1	45.1	50.0	38.6	55.4	28.1	42.7	42.7	46.5	37.0	52.1	26.6
	85	50.4	50.4	52.7	48.1	58.8	38.1	48.3	48.3	50.2	46.9	55.6	36.7	45.9	45.9	46.8	45.2	52.2	35.3
	90	53.5	53.5	53.6	53.6	58.9	46.8	51.1	51.1	51.5	51.5	55.7	45.4	48.6	48.6	48.6	48.6	52.4	43.6
1760	75	47.6	43.6	53.2	32.8	59.2	21.2	44.8	42.2	50.2	31.3	55.9	19.8	42.0	40.6	47.4	30.0	52.4	18.3
	80	49.0	49.0	53.7	42.4	59.5	30.8	46.6	46.6	50.7	41.0	56.2	29.4	44.1	44.1	47.2	39.0	52.7	27.9
	85	52.1	52.1	53.6	51.3	59.6	40.3	50.0	50.0	50.7	49.8	56.4	38.9	47.4	47.4	47.7	47.7	52.9	37.4
	90	55.4	55.4	55.5	55.5	59.8	49.8	52.9	52.9	53.0	53.0	56.5	48.0	50.2	50.2	50.3	50.3	53.1	46.5
1920	75	48.3	46.1	53.9	34.2	59.9	21.6	45.5	44.6	50.8	32.8	56.4	20.2	42.7	42.7	48.0	31.4	52.9	18.7
	80	50.4	50.4	54.0	44.6	60.2	32.1	47.9	47.9	51.4	42.9	56.8	30.6	45.6	45.6	47.8	41.2	53.3	29.2
	85	54.0	54.0	54.5	54.4	60.3	42.5	51.5	51.5	51.6	51.6	57.0	41.0	48.5	48.5	48.6	48.6	53.5	39.6
	90	57.1	57.1	57.1	57.1	60.5	52.4	54.4	54.4	54.5	54.5	57.2	50.9	51.7	51.7	51.8	51.8	53.8	49.4
		Ambient Temperature 115°F						Ambient Temperature 125°F											
1200	75	36.3	30.6	41.1	23.1	46.2	15.3	33.4	28.8	38.0	21.6	42.7	13.8						
	80	36.4	36.4	41.2	29.6	46.4	21.8	33.6	33.6	38.1	28.0	42.9	20.3						
	85	38.5	38.5	41.3	35.8	46.5	28.4	36.1	36.1	38.2	34.2	43.1	26.8						
	90	41.0	41.0	41.5	41.5	46.7	34.8	38.5	38.5	38.6	38.6	43.2	33.3						
1440	75	37.6	34.1	42.5	25.4	47.5	16.0	34.6	32.5	39.2	23.8	43.8	14.4						
	80	38.7	38.7	42.6	33.1	47.8	23.8	36.1	36.1	39.3	31.6	44.2	22.3						
	85	41.4	41.4	42.8	40.5	48.0	31.6	38.7	38.7	39.6	38.9	44.4	30.1						
	90	44.1	44.1	44.2	44.2	48.1	39.4	41.4	41.4	41.5	41.5	44.5	37.5						
1600	75	38.4	36.6	43.2	26.8	48.2	16.4	35.3	34.9	39.8	25.3	44.4	14.8						
	80	40.2	40.2	43.3	35.5	48.5	25.1	37.5	37.5	40.0	33.5	44.8	23.6						
	85	43.0	43.0	43.7	43.6	48.7	33.8	40.2	40.2	40.4	40.4	45.0	32.2						
	90	45.9	45.9	46.0	46.0	48.9	42.0	43.0	43.0	43.1	43.1	45.2	40.4						
1760	75	39.1	39.0	43.7	28.3	48.7	16.8	36.0	36.0	40.3	26.7	44.9	15.2						
	80	41.5	41.5	44.0	37.4	49.1	26.4	38.7	38.7	40.5	35.7	45.3	24.8						
	85	44.4	44.4	44.5	44.5	49.3	35.9	41.5	41.5	41.6	41.6	45.5	34.4						
	90	47.4	47.4	47.5	47.5	49.6	44.9	44.4	44.4	44.5	44.5	45.9	43.3						
1920	75	39.7	39.7	44.2	29.7	49.2	17.2	36.8	36.8	40.7	28.1	45.3	15.6						
	80	42.6	42.6	44.5	39.6	49.6	27.7	39.7	39.7	41.0	37.9	45.8	26.1						
	85	45.7	45.7	45.7	45.7	49.8	38.1	42.7	42.7	42.7	42.7	46.0	36.5						
	90	48.8	48.8	48.8	48.8	50.2	47.8	45.6	45.6	45.7	45.7	46.4	46.2						

Notes:

1. All capacities shown are gross and have not considered indoor fan heat. To obtain NET cooling capacity subtract indoor fan heat. For indoor fan heat formula, refer to appropriate airflow table notes.
2. MBh = Total gross capacity
3. SHC = Sensible heat capacity

Table 24. Gross cooling capacities — 5 tons high efficiency, heat pump

CFM	Ent DB (° F)	Entering Wet Bulb Temp (°F)						Entering Wet Bulb Temp (°F)						Entering Wet Bulb Temp (°F)					
		61		67		73		61		67		73		61		67		73	
		MBh	SHC	MBh	SHC	MBh	SHC	MBh	SHC	MBh	SHC	MBh	SHC	MBh	SHC	MBh	SHC	MBh	SHC
		Ambient Temperature 85°F						Ambient Temperature 95°F						Ambient Temperature 105°F					
1500	75	54.8	44.0	61.5	34.3	68.7	24.2	51.7	42.2	58.0	32.5	64.9	22.5	48.4	40.5	54.5	30.8	60.9	20.7
	80	54.8	51.6	61.6	42.5	68.8	32.5	51.7	49.9	58.2	40.8	65.1	30.8	48.5	48.0	54.7	39.0	61.2	29.1
	85	55.2	55.2	61.8	50.7	69.0	40.8	52.7	52.7	58.4	49.0	65.3	39.1	50.0	50.0	54.9	47.3	61.4	37.4
	90	58.4	58.4	61.8	58.3	69.1	49.1	55.8	55.8	58.4	56.6	65.5	47.4	53.1	53.1	54.9	54.7	61.6	45.7

Table 24. Gross cooling capacities — 5 tons high efficiency, heat pump (continued)

CFM	Ent DB (° F)	Entering Wet Bulb Temp (°F)						Entering Wet Bulb Temp (°F)						Entering Wet Bulb Temp (°F)					
		61		67		73		61		67		73		61		67		73	
		MBh	SHC	MBh	SHC	MBh	SHC	MBh	SHC	MBh	SHC	MBh	SHC	MBh	SHC	MBh	SHC	MBh	SHC
1800	75	56.9	49.0	63.6	37.2	70.7	25.1	53.6	47.2	60.0	35.5	66.7	23.4	50.1	45.4	56.3	33.7	62.5	21.6
	80	57.1	57.1	63.8	47.1	71.0	35.1	53.8	53.8	60.2	45.4	67.1	33.4	50.5	50.5	56.5	43.6	63.0	31.6
	85	59.4	59.4	64.0	57.0	71.3	45.1	56.7	56.7	60.4	55.2	67.4	43.4	53.8	53.8	56.7	52.7	63.3	41.6
	90	62.9	62.9	64.2	64.2	71.4	55.0	60.1	60.1	60.8	60.8	67.6	53.3	57.1	57.1	57.2	57.2	63.5	51.5
2000	75	57.9	52.2	64.7	39.1	71.8	25.6	54.5	49.7	61.0	37.4	67.7	23.9	51.1	47.8	57.2	35.6	63.4	22.1
	80	58.4	58.4	65.0	50.1	72.2	36.8	55.2	55.2	61.3	48.4	68.2	35.0	52.3	52.3	57.5	46.6	64.0	33.3
	85	61.8	61.8	65.1	60.3	72.4	47.8	58.9	58.9	61.5	58.5	68.5	46.1	55.8	55.8	57.7	56.6	64.3	44.4
	90	65.5	65.5	65.7	65.7	72.6	58.8	62.5	62.5	62.6	62.6	68.7	57.1	59.3	59.3	59.4	59.4	64.5	55.4
2200	75	58.9	54.7	65.7	41.0	72.6	26.1	55.4	52.8	61.9	39.2	68.4	24.4	51.9	50.9	58.0	37.4	64.0	22.6
	80	60.1	60.1	65.9	53.1	73.1	38.4	57.1	57.1	62.2	51.4	69.0	36.7	54.0	54.0	58.2	49.5	64.8	34.9
	85	63.9	63.9	66.2	64.3	73.4	50.6	60.8	60.8	62.5	62.4	69.4	48.9	57.6	57.6	58.7	58.7	65.1	47.1
	90	67.7	67.7	67.8	67.8	73.6	62.7	64.6	64.6	64.7	64.7	69.6	61.0	61.3	61.3	61.4	61.4	65.3	58.1
2400	75	59.7	57.7	66.5	42.9	73.4	26.7	56.2	55.8	62.6	41.1	69.1	24.9	52.6	52.6	58.6	39.3	64.6	23.1
	80	61.8	61.8	66.7	56.1	74.0	40.0	58.7	58.7	62.9	54.3	69.8	38.3	55.5	55.5	58.9	51.4	65.4	36.5
	85	65.7	65.7	67.2	67.2	74.3	53.3	62.5	62.5	63.5	63.5	70.1	51.6	59.2	59.2	59.6	59.6	65.8	49.8
	90	69.7	69.7	69.8	69.8	74.5	66.5	66.4	66.4	66.5	66.5	70.4	63.7	63.0	63.0	63.1	63.1	66.1	61.8
		Ambient Temperature 115°F						Ambient Temperature 125°F											
1500	75	45.2	38.7	50.8	29.0	56.8	19.0	41.8	36.9	47.1	27.2	52.6	17.2						
	80	45.3	45.3	51.1	37.3	57.2	27.3	42.0	42.0	47.4	35.5	53.0	25.5						
	85	47.3	47.3	51.2	45.5	57.4	35.6	44.5	44.5	47.5	43.0	53.3	33.9						
	90	50.3	50.3	51.3	51.3	57.6	43.9	47.4	47.4	47.7	47.7	53.5	42.1						
1800	75	46.7	42.9	52.4	31.9	58.2	19.8	43.2	40.9	48.5	30.0	53.8	17.9						
	80	47.5	47.5	52.7	41.8	58.8	29.8	44.6	44.6	48.8	40.0	54.5	28.0						
	85	50.8	50.8	52.9	50.8	59.1	39.8	47.7	47.7	49.1	48.9	54.8	38.0						
	90	54.0	54.0	54.1	54.1	59.3	49.7	50.8	50.8	50.9	50.9	55.0	47.0						
2000	75	47.5	45.9	53.2	33.7	58.9	20.3	44.0	43.9	49.3	31.9	54.4	18.4						
	80	49.3	49.3	53.5	44.8	59.6	31.5	46.2	46.2	49.5	42.0	55.2	29.6						
	85	52.7	52.7	53.9	53.9	60.0	42.6	49.4	49.4	50.0	50.0	55.6	40.7						
	90	56.1	56.1	56.2	56.2	60.2	52.6	52.7	52.7	52.8	52.8	55.9	50.6						
2200	75	48.3	48.3	53.9	35.6	59.5	20.8	44.7	44.7	49.9	33.7	54.9	18.9						
	80	50.8	50.8	54.2	46.7	60.3	33.1	47.6	47.6	50.2	44.7	55.8	31.2						
	85	54.3	54.3	54.8	54.8	60.7	45.3	50.9	50.9	50.9	50.9	56.2	43.4						
	90	57.9	57.9	58.0	58.0	61.0	56.2	54.3	54.3	54.4	54.4	56.6	54.2						
2400	75	49.0	49.0	54.5	37.4	60.0	21.2	45.4	45.4	50.4	35.6	55.3	19.4						
	80	52.2	52.2	54.9	49.4	60.9	34.7	48.8	48.8	50.8	47.4	56.4	32.8						
	85	55.8	55.8	55.8	55.8	61.3	48.0	52.3	52.3	52.3	52.3	56.8	46.1						
	90	59.5	59.5	59.6	59.6	61.7	59.8	55.8	55.8	55.8	55.8	57.2	57.2						

Notes:

1. All capacities shown are gross and have not considered indoor fan heat. To obtain NET cooling capacity subtract indoor fan heat. For indoor fan heat formula, refer to appropriate airflow table notes.
2. MBh = Total gross capacity
3. SHC = Sensible heat capacity

Table 25. Gross cooling capacities — 6 tons high efficiency, heat pump

CFM	Ent DB (° F)	Entering Wet Bulb Temp (°F)						Entering Wet Bulb Temp (°F)						Entering Wet Bulb Temp (°F)					
		61		67		73		61		67		73		61		67		73	
		MBh	SHC	MBh	SHC	MBh	SHC	MBh	SHC	MBh	SHC	MBh	SHC	MBh	SHC	MBh	SHC	MBh	SHC
		Ambient Temperature 85°F						Ambient Temperature 95°F						Ambient Temperature 105°F					
1800	75	77.0	58.9	76.0	42.1	84.6	30.0	64.9	51.9	72.7	40.4	80.8	28.3	61.6	50.0	69.0	38.6	76.7	26.5
	80	68.4	63.3	76.3	52.0	85.0	40.0	65.5	61.6	72.9	50.3	81.2	38.2	62.3	59.7	69.3	48.5	77.7	36.7
	85	70.5	70.5	76.6	61.8	85.2	49.8	68.0	68.0	73.3	59.9	81.5	48.2	65.2	65.2	69.7	58.0	77.5	46.3
	90	74.6	74.6	77.1	71.3	85.5	59.7	72.0	72.0	73.9	69.6	81.8	58.0	69.1	69.1	70.3	67.7	77.8	56.2
2160	75	70.8	59.4	78.8	45.7	87.3	31.1	67.6	57.6	75.2	43.9	83.2	29.3	64.2	55.7	71.3	42.1	78.9	27.5
	80	71.7	71.2	79.1	57.5	87.8	43.0	68.7	68.7	75.6	55.8	83.9	41.3	65.7	65.7	71.8	53.6	79.5	39.5
	85	75.8	75.8	79.7	68.9	88.2	54.9	73.0	73.0	76.2	67.1	84.2	53.2	69.9	69.9	72.4	65.2	79.9	51.3
	90	80.3	80.3	80.7	80.7	88.6	66.5	77.4	77.4	77.6	77.6	84.6	64.7	74.2	74.2	74.3	74.3	80.8	63.0

Table 25. Gross cooling capacities — 6 tons high efficiency, heat pump (continued)

CFM	Ent DB (° F)	Entering Wet Bulb Temp (°F)						Entering Wet Bulb Temp (°F)						Entering Wet Bulb Temp (°F)					
		61		67		73		61		67		73		61		67		73	
		MBh	SHC	MBh	SHC	MBh	SHC	MBh	SHC	MBh	SHC	MBh	SHC	MBh	SHC	MBh	SHC	MBh	SHC
2400	75	72.3	63.2	80.2	48.0	88.6	31.7	69.1	61.4	76.5	46.2	85.1	30.2	65.5	59.4	72.5	44.3	79.9	28.1
	80	74.1	74.1	80.7	60.7	89.3	45.0	71.3	71.3	77.0	58.9	85.2	43.3	68.1	68.1	73.1	56.9	80.7	41.4
	85	78.8	78.8	81.5	73.7	89.7	58.3	75.8	75.8	77.9	71.9	85.6	56.5	72.5	72.5	73.9	69.9	81.1	54.6
	90	83.5	83.5	83.7	83.7	90.3	71.0	80.4	80.4	80.6	80.6	86.2	69.1	77.0	77.0	77.1	77.1	82.2	67.3
2640	75	73.7	66.9	81.3	50.2	89.7	32.4	70.4	65.1	77.5	48.4	85.4	30.6	66.7	63.1	73.4	46.5	80.8	28.7
	80	76.6	76.6	82.0	64.1	90.5	47.0	73.6	73.6	78.3	62.2	86.2	45.2	70.2	70.2	74.2	60.3	81.6	43.3
	85	81.4	81.4	83.0	78.4	91.0	61.6	78.3	78.3	79.3	76.6	86.7	59.3	74.8	74.8	75.3	74.6	82.2	57.2
	90	86.3	86.3	86.5	86.5	91.6	75.3	83.1	83.1	83.2	83.2	87.5	73.5	79.8	79.8	79.6	79.6	83.4	71.6
2880	75	74.9	70.5	82.3	52.4	90.6	33.0	71.6	68.7	78.4	50.6	86.9	31.4	67.8	66.7	74.2	48.0	81.5	29.3
	80	78.7	78.7	83.1	67.4	91.5	48.9	75.6	75.6	79.3	65.6	87.1	47.1	72.1	72.1	75.2	63.5	82.4	45.2
	85	83.7	83.7	84.4	83.1	92.5	64.3	80.4	80.4	80.7	80.7	87.8	62.2	76.8	76.8	77.5	77.5	83.1	60.2
	90	88.8	88.8	89.0	89.0	92.9	79.7	85.4	85.4	85.5	85.5	89.0	78.0	81.6	81.6	81.7	81.7	84.4	75.9
		Ambient Temperature 115°F						Ambient Temperature 125°F											
1800	75	58.1	48.0	65.0	36.6	72.2	24.5	54.1	45.9	60.6	34.6	67.3	22.5						
	80	58.7	57.8	65.3	46.5	72.7	34.5	55.0	55.0	60.9	44.4	67.8	32.4						
	85	62.1	62.1	65.7	56.0	73.0	44.4	58.6	58.6	61.4	53.9	68.2	42.3						
	90	65.9	65.9	66.4	65.8	73.3	54.3	62.3	62.3	62.5	62.5	68.5	51.9						
2160	75	60.4	53.7	67.1	40.1	74.1	25.5	56.2	51.4	62.4	38.0	69.4	23.6						
	80	62.4	62.4	67.6	51.5	74.8	37.5	58.7	58.7	63.0	49.3	69.7	35.4						
	85	66.5	66.5	68.3	63.1	75.2	49.4	62.7	62.7	63.7	60.9	70.1	47.3						
	90	70.6	70.6	70.8	70.8	75.7	60.7	66.7	66.7	66.8	66.8	71.0	58.6						
2400	75	61.6	57.3	68.1	42.3	75.0	26.1	57.4	55.1	63.3	39.7	70.3	24.2						
	80	64.6	64.6	68.7	54.8	75.8	39.4	60.8	60.8	64.0	52.5	70.6	37.3						
	85	68.9	68.9	69.7	67.8	76.3	52.1	64.9	64.9	65.0	65.0	71.1	49.8						
	90	73.2	73.2	73.3	73.3	77.0	65.1	69.0	69.0	69.2	69.2	72.1	62.9						
2640	75	62.8	60.9	68.9	43.9	75.8	26.7	58.4	58.4	64.1	41.6	70.3	24.6						
	80	66.6	66.6	69.8	58.1	76.8	41.4	62.6	62.6	65.0	55.8	71.2	39.2						
	85	71.0	71.0	71.1	71.1	77.3	55.1	66.8	66.8	66.9	66.9	72.0	52.8						
	90	75.5	75.5	75.6	75.6	78.1	69.4	71.1	71.1	71.5	71.5	72.9	67.1						
2880	75	63.8	63.8	69.7	45.8	76.3	27.3	59.8	59.8	64.8	43.4	70.6	25.1						
	80	68.3	68.3	70.7	61.4	77.3	42.6	64.1	64.1	65.8	59.0	71.8	41.1						
	85	72.9	72.9	73.0	73.0	78.1	58.0	68.5	68.5	68.6	68.6	72.8	55.7						
	90	77.4	77.4	77.6	77.6	79.1	73.7	73.1	73.1	73.0	73.0	73.8	71.4						

Notes:

1. All capacities shown are gross and have not considered indoor fan heat. To obtain NET cooling capacity subtract indoor fan heat. For indoor fan heat formula, refer to appropriate airflow table notes.
2. MBh = Total gross capacity
3. SHC = Sensible heat capacity

Table 26. Gross cooling capacities — 7.5 tons high efficiency, heat pump

CFM	Ent DB (° F)	Entering Wet Bulb Temp (°F)						Entering Wet Bulb Temp (°F)						Entering Wet Bulb Temp (°F)					
		61		67		73		61		67		73		61		67		73	
		MBh	SHC	MBh	SHC	MBh	SHC	MBh	SHC	MBh	SHC	MBh	SHC	MBh	SHC	MBh	SHC	MBh	SHC
		Ambient Temperature 85°F						Ambient Temperature 95°F						Ambient Temperature 105°F					
2250	75	89.4	71.0	88.8	49.8	99.3	34.8	75.6	62.4	84.8	47.8	94.9	32.7	71.6	60.2	80.5	45.6	90.1	30.6
	80	79.9	76.5	88.9	62.2	99.4	47.2	76.4	74.5	85.0	60.1	95.1	45.2	72.5	72.2	80.7	57.9	90.4	43.0
	85	83.2	83.2	89.3	74.5	99.6	59.6	80.2	80.2	85.4	72.2	95.3	57.6	76.8	76.8	81.2	70.0	90.6	55.4
	90	88.2	88.2	90.1	86.5	99.8	71.9	85.0	85.0	86.3	84.5	95.5	69.9	81.6	81.6	82.2	82.2	90.8	67.8
2700	75	82.3	71.5	91.8	54.2	102.2	36.1	78.6	69.5	87.6	52.1	97.6	34.0	74.4	67.1	83.1	49.9	92.7	31.8
	80	83.9	83.9	92.1	69.0	102.5	51.0	80.7	80.7	87.9	67.0	97.9	48.9	77.1	77.1	83.4	64.7	93.0	46.7
	85	89.3	89.3	92.8	83.5	102.7	65.9	85.9	85.9	88.7	81.3	98.2	63.8	82.2	82.2	84.3	79.1	93.2	61.6
	90	94.6	94.6	94.8	94.8	103.1	80.7	91.2	91.2	91.4	91.4	98.6	78.7	87.4	87.4	87.6	87.6	93.7	76.1
3000	75	84.0	76.3	93.3	57.1	103.8	36.9	80.2	74.2	89.0	55.0	99.0	34.8	76.0	71.9	84.4	52.7	93.9	32.6
	80	87.0	87.0	93.7	73.5	104.1	53.5	83.6	83.6	89.4	71.0	99.4	51.4	79.8	79.8	84.9	68.8	94.3	49.2
	85	92.6	92.6	94.7	89.5	104.3	70.0	89.1	89.1	90.6	87.4	99.6	67.9	85.2	85.2	86.1	85.1	94.6	65.7
	90	98.2	98.2	98.4	98.4	104.9	86.1	94.6	94.6	94.8	94.8	100.1	83.9	90.6	90.6	90.8	90.8	95.3	81.7

Table 26. Gross cooling capacities — 7.5 tons high efficiency, heat pump (continued)

CFM	Ent DB (° F)	Entering Wet Bulb Temp (°F)						Entering Wet Bulb Temp (°F)						Entering Wet Bulb Temp (°F)					
		61		67		73		61		67		73		61		67		73	
		MBh	SHC	MBh	SHC	MBh	SHC	MBh	SHC	MBh	SHC	MBh	SHC	MBh	SHC	MBh	SHC	MBh	SHC
3300	75	85.5	81.0	94.6	59.9	105.0	37.7	81.7	78.5	90.2	57.7	100.2	35.5	77.4	76.5	85.5	55.5	95.0	33.3
	80	89.7	89.7	95.1	77.5	105.4	55.9	86.2	86.2	90.8	75.3	100.4	53.8	82.3	82.3	86.2	73.0	95.4	51.6
	85	95.5	95.5	96.5	95.5	105.7	74.1	91.8	91.8	92.4	92.4	100.8	71.9	87.8	87.8	87.9	87.9	95.8	69.8
	90	101.4	101.4	101.6	101.6	106.4	91.7	97.6	97.6	97.7	97.7	101.6	89.5	93.4	93.4	93.6	93.6	96.7	87.2
3600	75	86.9	85.7	95.7	62.6	106.1	38.4	83.0	83.0	91.2	60.5	101.0	36.2	78.8	78.8	86.4	58.2	95.9	34.0
	80	92.1	92.1	96.4	81.8	106.5	58.3	88.4	88.4	92.0	79.6	101.5	56.2	84.4	84.4	87.3	77.2	96.4	54.0
	85	98.1	98.1	98.3	98.3	106.8	78.2	94.3	94.3	94.4	94.4	101.9	76.0	90.1	90.1	90.2	90.2	96.8	73.8
	90	104.2	104.2	104.3	104.3	107.8	97.2	100.2	100.2	100.2	100.2	103.0	95.0	95.9	95.9	96.0	96.0	98.0	92.8
		Ambient Temperature 115°F						Ambient Temperature 125°F											
2250	75	67.5	57.7	76.0	43.4	85.2	28.3	63.1	55.2	71.2	41.0	79.9	26.0						
	80	68.6	68.6	76.3	55.7	85.4	40.8	64.8	64.8	71.5	53.3	80.2	38.4						
	85	73.2	73.2	76.8	67.7	85.7	53.2	69.4	69.4	72.1	65.3	80.4	50.8						
	90	77.9	77.9	78.1	78.1	86.0	65.5	73.9	73.9	74.1	74.1	80.8	63.2						
2700	75	70.2	64.8	78.4	47.6	87.5	29.5	65.6	62.3	73.3	45.2	82.0	27.2						
	80	73.3	73.3	78.8	62.1	87.8	44.5	69.2	69.2	73.8	59.6	82.4	42.1						
	85	78.3	78.3	79.7	76.8	88.1	59.3	74.1	74.1	74.9	74.3	82.6	57.0						
	90	83.4	83.4	83.5	83.5	88.7	73.8	79.1	79.1	79.2	79.2	83.3	71.3						
3000	75	71.7	69.5	79.6	50.4	88.6	30.3	67.1	67.0	74.4	48.0	83.0	27.9						
	80	75.9	75.9	80.1	66.4	89.1	46.9	71.7	71.7	75.1	63.9	83.5	44.5						
	85	81.1	81.1	81.5	81.5	89.4	63.4	76.7	76.7	76.9	76.9	83.8	61.0						
	90	86.4	86.4	86.5	86.5	90.1	79.3	81.9	81.9	82.0	82.0	84.7	76.9						
3300	75	73.1	73.1	80.6	53.2	89.6	31.0	68.6	68.6	75.3	50.7	83.9	28.6						
	80	78.2	78.2	81.3	70.6	90.1	49.3	73.8	73.8	76.2	68.1	84.4	46.9						
	85	83.6	83.6	83.7	83.7	90.5	67.5	79.0	79.0	79.1	79.1	84.8	64.5						
	90	89.0	89.0	89.2	89.2	91.5	84.9	84.3	84.3	84.4	84.4	85.9	82.4						
3600	75	74.6	74.6	81.4	55.9	90.4	31.7	70.2	70.2	76.1	53.4	84.6	29.3						
	80	80.1	80.1	82.4	74.8	90.9	51.7	75.6	75.6	77.2	72.3	85.1	49.3						
	85	85.7	85.7	85.8	85.8	91.4	70.8	81.0	81.0	81.1	81.1	85.7	68.3						
	90	91.3	91.3	91.4	91.4	92.7	90.4	86.4	86.4	86.5	86.5	87.1	87.1						

Notes:

1. All capacities shown are gross and have not considered indoor fan heat. To obtain NET cooling capacity subtract indoor fan heat. For indoor fan heat formula, refer to appropriate airflow table notes.
2. MBh = Total gross capacity
3. SHC = Sensible heat capacity

Table 27. Gross cooling capacities — 8.5 tons high efficiency, heat pump

CFM	Ent DB (° F)	Entering Wet Bulb Temp (°F)						Entering Wet Bulb Temp (°F)						Entering Wet Bulb Temp (°F)					
		61		67		73		61		67		73		61		67		73	
		MBh	SHC	MBh	SHC	MBh	SHC	MBh	SHC	MBh	SHC	MBh	SHC	MBh	SHC	MBh	SHC	MBh	SHC
		Ambient Temperature 85°F						Ambient Temperature 95°F						Ambient Temperature 105°F					
2550	75	107.8	84.0	107.2	60.0	118.9	42.6	91.9	74.6	102.2	57.7	113.3	40.2	87.2	71.9	97.0	55.2	107.4	37.8
	80	97.2	90.7	107.5	74.1	119.2	56.7	92.8	88.3	102.5	71.7	113.6	54.3	88.2	85.8	97.3	69.3	107.8	51.9
	85	100.4	100.4	107.9	88.1	119.4	70.8	96.6	96.6	103.0	85.5	113.9	68.4	92.6	92.6	97.9	83.0	108.1	66.0
	90	106.0	106.0	108.8	101.7	119.8	84.8	102.0	102.0	104.0	99.4	114.3	82.5	97.9	97.9	98.9	96.9	108.5	80.0
3060	75	100.1	85.0	110.8	65.0	122.5	44.1	95.4	82.6	105.5	62.6	116.5	41.6	90.5	80.0	99.9	60.1	110.3	39.1
	80	101.7	101.7	111.2	81.8	122.9	61.0	97.4	97.4	106.0	79.4	117.0	58.6	93.1	93.1	100.5	76.9	110.8	56.1
	85	107.5	107.5	112.1	98.2	123.3	77.9	103.3	103.3	106.9	95.7	117.4	75.5	98.8	98.8	101.4	93.2	111.2	73.0
	90	113.5	113.5	113.8	113.8	123.8	94.8	109.2	109.2	109.4	109.4	118.0	92.4	104.5	104.5	104.7	104.7	111.9	89.4
3400	75	102.2	90.4	112.6	68.2	124.3	45.0	97.4	87.9	107.1	65.7	118.1	42.5	92.3	85.2	101.4	63.2	111.7	40.0
	80	105.1	105.1	113.2	86.9	124.8	63.8	100.8	100.8	107.8	84.0	118.7	61.3	96.3	96.3	102.2	81.4	112.3	58.8
	85	111.4	111.4	114.3	105.0	125.3	82.6	106.9	106.9	109.0	102.5	119.2	80.1	102.2	102.2	103.5	99.9	112.8	77.6
	90	117.8	117.8	118.0	118.0	126.0	100.9	113.1	113.1	113.3	113.3	120.0	98.3	108.2	108.2	108.4	108.4	113.7	95.7
3740	75	104.0	95.6	114.1	71.3	125.8	45.8	99.1	93.1	108.5	68.8	119.5	43.3	93.9	90.4	102.7	66.3	112.9	40.8
	80	108.3	108.3	114.9	91.3	126.4	66.6	103.8	103.8	109.4	88.8	120.1	64.1	99.0	99.0	103.6	86.1	113.6	61.5
	85	114.8	114.8	116.4	111.7	126.9	87.2	110.1	110.1	111.0	109.2	120.7	84.8	105.2	105.2	105.4	105.4	114.2	82.2
	90	121.5	121.5	121.7	121.7	127.9	107.2	116.6	116.6	116.8	116.8	121.8	104.6	111.4	111.4	111.6	111.6	115.4	101.9

Table 27. Gross cooling capacities — 8.5 tons high efficiency, heat pump (continued)

CFM	Ent DB (° F)	Entering Wet Bulb Temp (°F)						Entering Wet Bulb Temp (°F)						Entering Wet Bulb Temp (°F)					
		61		67		73		61		67		73		61		67		73	
		MBh	SHC	MBh	SHC	MBh	SHC	MBh	SHC	MBh	SHC	MBh	SHC	MBh	SHC	MBh	SHC	MBh	SHC
4080	75	105.6	100.9	115.4	74.4	127.1	46.6	100.6	98.3	109.7	71.9	120.6	44.1	95.4	95.4	103.8	69.4	113.9	41.6
	80	111.1	111.1	116.4	96.1	127.7	69.3	106.4	106.4	110.7	93.5	121.3	66.8	101.4	101.4	104.9	90.8	114.7	64.2
	85	117.9	117.9	118.4	118.4	128.4	91.8	112.9	112.9	113.1	113.1	122.0	88.7	107.7	107.7	107.9	107.9	115.4	85.9
	90	124.8	124.8	125.1	125.1	129.6	113.4	119.7	119.7	119.9	119.9	123.3	110.8	114.2	114.2	114.4	114.4	116.9	108.1
		Ambient Temperature 115°F						Ambient Temperature 125°F											
2550	75	82.3	69.3	91.5	52.7	101.3	35.2	77.0	66.5	85.6	50.0	94.7	32.6						
	80	83.4	83.2	91.8	66.7	101.7	49.4	78.6	78.6	86.0	64.1	95.2	46.8						
	85	88.2	88.2	92.4	80.4	102.0	63.5	83.6	83.6	86.7	77.6	95.5	60.8						
	90	93.4	93.4	93.6	93.6	102.4	77.5	88.6	88.6	88.8	88.8	95.9	74.9						
3060	75	85.3	77.3	94.1	57.5	103.8	36.6	79.8	74.4	88.0	54.8	96.9	33.9						
	80	88.5	88.5	94.7	73.9	104.3	53.5	83.6	83.6	88.6	71.1	97.5	50.9						
	85	94.0	94.0	95.7	90.5	104.8	70.4	88.9	88.9	89.8	87.7	98.0	67.8						
	90	99.5	99.5	99.7	99.7	105.5	86.8	94.2	94.2	94.4	94.4	98.8	84.0						
3400	75	87.0	82.5	95.5	60.6	105.1	37.4	81.4	79.6	89.2	57.9	98.0	34.7						
	80	91.4	91.4	96.2	78.6	105.7	56.3	86.3	86.3	90.0	75.8	98.7	53.6						
	85	97.2	97.2	97.7	97.2	106.2	75.1	91.8	91.8	91.9	91.9	99.3	71.8						
	90	102.9	102.9	103.1	103.1	107.2	93.0	97.3	97.3	97.4	97.4	100.3	90.2						
3740	75	88.5	87.7	96.6	63.7	106.1	38.2	82.9	82.9	90.1	61.0	98.9	35.5						
	80	94.0	94.0	97.6	83.4	106.8	59.0	88.6	88.6	91.2	80.5	99.7	56.3						
	85	99.9	99.9	100.1	100.1	107.5	78.9	94.2	94.2	94.4	94.4	100.5	76.0						
	90	105.9	105.9	106.1	106.1	108.7	99.2	100.0	100.0	100.1	100.1	101.7	96.3						
4080	75	90.2	90.2	97.5	66.8	107.0	39.0	84.8	84.8	91.0	63.1	99.7	36.3						
	80	96.2	96.2	98.8	88.0	107.8	61.6	90.6	90.6	92.3	85.1	100.5	58.9						
	85	102.3	102.3	102.4	102.4	108.6	83.2	96.4	96.4	96.5	96.5	101.4	80.3						
	90	108.5	108.5	108.6	108.6	110.1	105.4	102.4	102.4	102.5	102.5	103.1	102.5						

Notes:

1. All capacities shown are gross and have not considered indoor fan heat. To obtain NET cooling capacity subtract indoor fan heat. For indoor fan heat formula, refer to appropriate airflow table notes.
2. MBh = Total gross capacity
3. SHC = Sensible heat capacity

Table 28. Gross cooling capacities — 10 tons high efficiency, heat pump

CFM	Ent DB (° F)	Entering Wet Bulb Temp (°F)						Entering Wet Bulb Temp (°F)						Entering Wet Bulb Temp (°F)					
		61		67		73		61		67		73		61		67		73	
		MBh	SHC	MBh	SHC	MBh	SHC	MBh	SHC	MBh	SHC	MBh	SHC	MBh	SHC	MBh	SHC	MBh	SHC
		Ambient Temperature 85°F						Ambient Temperature 95°F						Ambient Temperature 105°F					
3000	75	107.9	87.7	120.3	68.0	133.3	47.6	102.8	85.0	114.7	65.3	126.8	44.8	97.5	82.2	108.8	62.4	120.1	42.0
	80	108.5	102.9	120.8	84.6	134.1	64.3	103.6	100.1	115.3	81.8	127.9	61.6	98.4	97.2	109.4	79.0	121.3	58.8
	85	111.5	111.5	121.2	101.0	134.7	80.9	107.3	107.3	115.6	98.3	128.5	78.2	102.7	102.7	109.8	94.1	122.0	75.4
	90	117.8	117.8	121.9	116.1	135.1	97.5	113.5	113.5	116.5	113.3	129.0	94.8	108.8	108.8	110.8	110.3	122.5	92.0
3600	75	111.7	96.2	124.3	73.9	136.9	49.2	106.4	93.3	118.4	71.1	130.2	46.5	100.9	90.2	112.1	68.2	123.1	43.6
	80	113.3	113.3	124.9	93.7	138.2	69.4	108.2	108.2	119.0	90.9	131.6	66.6	103.0	103.0	112.8	88.0	124.7	63.7
	85	119.2	119.2	125.4	111.8	139.0	89.3	114.6	114.6	119.7	108.8	132.5	86.6	109.6	109.6	113.6	105.8	125.6	83.7
	90	126.1	126.1	127.1	127.1	139.4	109.2	121.3	121.3	121.6	121.6	133.0	106.4	116.2	116.2	116.4	116.4	126.1	103.5
4000	75	113.9	102.3	126.4	77.6	138.8	50.3	108.5	99.3	120.3	74.8	131.8	47.5	102.8	96.1	113.9	71.9	124.5	44.5
	80	116.3	116.3	127.1	99.7	140.4	72.7	111.7	111.7	121.0	96.9	133.6	69.9	106.6	106.6	114.6	93.9	126.5	67.0
	85	123.5	123.5	127.9	119.5	141.2	94.8	118.6	118.6	122.0	116.5	134.5	92.1	113.4	113.4	115.8	113.4	127.4	89.2
	90	130.7	130.7	130.8	130.8	141.7	116.9	125.7	125.7	125.8	125.8	135.0	112.0	120.2	120.2	120.4	120.4	128.0	108.8
4400	75	115.8	108.3	128.1	81.4	140.3	51.3	110.3	105.2	121.9	78.5	133.2	48.4	104.5	102.0	115.3	75.6	125.7	45.5
	80	119.9	119.9	128.9	105.6	142.2	75.9	114.9	114.9	122.6	100.5	135.2	73.1	109.6	109.6	116.1	97.3	128.0	70.2
	85	127.3	127.3	130.0	127.2	143.0	100.3	122.1	122.1	124.1	124.1	136.2	97.5	116.6	116.6	117.8	117.8	128.9	94.6
	90	134.8	134.8	135.0	135.0	143.6	122.1	129.5	129.5	129.6	129.6	136.8	119.1	123.8	123.8	123.9	123.9	129.7	115.9
4800	75	117.5	114.2	129.6	85.1	141.6	52.3	111.9	111.1	123.2	82.2	134.3	49.4	106.1	106.1	116.5	79.2	126.7	46.4
	80	122.9	122.9	130.4	109.0	143.7	79.2	117.8	117.8	124.1	105.9	136.6	76.3	112.3	112.3	117.5	102.6	129.2	73.4
	85	130.6	130.6	132.1	132.1	144.6	105.7	125.2	125.2	126.0	126.0	137.6	102.9	119.5	119.5	119.8	119.8	130.2	100.0
	90	138.3	138.3	138.5	138.5	145.3	129.2	132.8	132.8	133.0	133.0	138.5	126.2	126.9	126.9	127.0	127.0	131.3	122.9
		Ambient Temperature 115°F						Ambient Temperature 125°F											

Table 28. Gross cooling capacities — 10 tons high efficiency, heat pump (continued)

CFM	Ent DB (° F)	Entering Wet Bulb Temp (°F)						Entering Wet Bulb Temp (°F)						Entering Wet Bulb Temp (°F)					
		61		67		73		61		67		73		61		67		73	
		MBh	SHC	MBh	SHC	MBh	SHC	MBh	SHC	MBh	SHC	MBh	SHC	MBh	SHC	MBh	SHC	MBh	SHC
3000	75	91.8	77.9	102.5	59.5	113.0	39.0	85.8	74.6	95.9	56.4	105.5	35.9						
	80	93.0	93.0	103.1	76.0	114.4	55.8	87.2	87.2	96.5	72.9	107.0	52.8						
	85	97.9	97.9	103.6	91.0	115.1	72.5	92.7	92.7	97.2	87.7	107.8	69.4						
	90	103.8	103.8	104.9	104.9	115.6	89.0	98.4	98.4	98.6	98.6	108.3	86.0						
3600	75	95.0	86.9	105.5	65.2	115.6	40.6	88.8	83.5	98.6	62.0	107.7	37.4						
	80	98.0	98.0	106.2	85.0	117.5	60.8	92.5	92.5	99.3	79.8	109.8	57.7						
	85	104.3	104.3	107.2	102.6	118.3	80.7	98.6	98.6	100.5	99.2	110.7	77.6						
	90	110.7	110.7	110.8	110.8	118.9	98.5	104.8	104.8	104.9	104.9	111.3	95.1						
4000	75	96.8	92.8	107.1	68.9	116.9	41.5	90.5	89.4	99.9	65.7	108.8	38.4						
	80	101.2	101.2	107.8	88.6	119.0	64.0	95.4	95.4	100.8	85.1	111.2	60.9						
	85	107.8	107.8	109.3	109.3	120.0	86.2	101.8	101.8	102.4	102.4	112.1	83.1						
	90	114.4	114.4	114.6	114.6	120.7	105.5	108.2	108.2	108.4	108.4	113.0	102.1						
4400	75	98.4	98.4	108.4	72.5	117.9	42.5	92.0	92.0	101.0	69.3	109.6	39.3						
	80	104.0	104.0	109.3	93.9	120.3	67.2	98.0	98.0	102.1	90.3	112.3	64.0						
	85	110.8	110.8	111.2	111.2	121.3	91.6	104.6	104.6	104.5	104.5	113.3	88.4						
	90	117.7	117.7	117.9	117.9	122.3	112.6	111.2	111.2	111.3	111.3	114.5	109.1						
4800	75	99.9	99.9	109.4	76.1	118.6	43.4	93.5	93.5	102.0	72.9	110.1	40.2						
	80	106.4	106.4	110.5	99.2	121.4	70.4	100.2	100.2	103.2	95.5	113.2	67.2						
	85	113.5	113.5	113.6	113.6	122.5	97.0	107.0	107.0	107.1	107.1	114.4	90.0						
	90	120.5	120.5	120.7	120.7	123.7	119.6	113.8	113.8	113.9	113.9	115.8	115.8						

Notes:

1. All capacities shown are gross and have not considered indoor fan heat. To obtain NET cooling capacity subtract indoor fan heat. For indoor fan heat formula, refer to appropriate airflow table notes.
2. MBh = Total gross capacity
3. SHC = Sensible heat capacity

Table 29. Gross cooling capacities — 12.5 tons high efficiency, heat pump

CFM	Ent DB (° F)	Entering Wet Bulb Temp (°F)						Entering Wet Bulb Temp (°F)						Entering Wet Bulb Temp (°F)					
		61		67		73		61		67		73		61		67		73	
		MBh	SHC	MBh	SHC	MBh	SHC	MBh	SHC	MBh	SHC	MBh	SHC	MBh	SHC	MBh	SHC	MBh	SHC
		Ambient Temperature 85°F						Ambient Temperature 95°F						Ambient Temperature 105°F					
3750	75	136.7	107.4	153.6	84.0	171.2	59.5	128.5	102.6	144.6	79.2	161.2	54.6	119.8	97.5	135.1	74.1	150.7	49.6
	80	137.2	126.7	154.0	103.9	171.5	79.6	129.2	121.8	145.1	99.1	161.7	74.7	120.7	116.7	135.6	94.0	151.3	69.7
	85	141.0	141.0	154.3	123.7	171.9	99.5	134.1	134.1	145.5	118.9	162.2	94.7	126.7	126.7	136.0	113.9	151.8	89.7
	90	149.4	149.4	154.9	143.0	172.2	119.4	144.4	144.4	146.2	138.1	162.6	114.6	134.7	134.7	137.0	133.0	152.2	109.6
4500	75	142.0	119.2	159.1	91.1	176.4	61.7	133.4	114.3	149.6	86.1	165.9	56.8	124.3	108.4	139.6	81.0	154.8	51.6
	80	143.5	142.3	159.6	114.8	177.0	85.7	135.3	135.3	150.1	109.9	166.7	80.7	127.4	127.4	140.2	104.7	155.8	75.6
	85	151.6	151.6	160.1	138.5	177.5	109.5	144.1	144.1	150.8	132.9	167.3	104.6	136.1	136.1	140.6	127.4	156.4	99.5
	90	160.8	160.8	161.8	161.5	177.9	133.2	153.1	153.1	153.4	153.4	167.7	128.3	144.8	144.8	144.6	144.6	156.9	123.3
5000	75	144.9	126.2	161.9	95.6	179.0	63.0	136.1	121.0	152.2	90.6	168.3	58.1	126.8	115.7	141.9	85.4	157.0	52.9
	80	148.1	148.1	162.4	121.9	179.9	89.5	140.5	140.5	152.8	116.9	169.3	84.6	132.2	132.2	142.5	111.7	158.1	79.4
	85	157.6	157.6	162.8	147.0	180.4	115.9	149.7	149.7	153.9	142.2	169.9	111.0	141.2	141.2	143.4	136.6	158.8	105.8
	90	167.2	167.2	167.0	167.0	180.8	142.1	159.0	159.0	159.3	159.3	170.4	137.2	150.3	150.3	150.1	150.1	159.4	132.1
5500	75	147.5	133.4	164.3	100.0	181.2	64.3	138.5	128.2	154.4	94.9	170.2	59.3	129.1	122.9	143.8	89.7	158.7	54.1
	80	153.0	153.0	164.8	128.7	182.2	93.3	144.9	144.9	155.0	123.7	171.4	88.3	136.4	136.4	144.6	118.5	160.0	83.2
	85	162.8	162.8	166.2	156.5	182.8	122.2	154.6	154.6	156.7	151.4	172.0	117.2	145.7	145.7	146.6	146.1	160.7	112.0
	90	172.8	172.8	172.5	172.5	183.4	151.0	164.3	164.3	164.5	164.5	172.8	146.0	155.2	155.2	154.8	154.8	161.6	139.7
6000	75	149.8	140.5	166.3	104.2	183.1	65.5	140.7	135.3	156.1	99.1	171.9	60.5	131.3	129.9	145.5	93.9	160.2	55.3
	80	157.2	157.2	166.9	135.5	184.2	97.0	148.9	148.9	156.9	130.4	173.2	92.0	140.1	140.1	146.3	123.9	161.6	86.8
	85	167.4	167.4	168.3	165.2	184.8	128.3	158.8	158.8	158.8	158.8	173.9	123.3	149.7	149.7	149.4	149.4	162.3	118.2
	90	177.7	177.7	177.3	177.3	185.6	158.5	168.9	168.9	168.5	168.5	174.9	153.3	159.4	159.4	159.0	159.0	163.6	148.0
		Ambient Temperature 115°F						Ambient Temperature 125°F											
3750	75	110.5	92.3	125.0	68.9	139.5	44.4	100.6	86.1	114.2	63.3	127.7	38.9						
	80	111.6	111.4	125.5	88.8	140.3	64.5	102.7	102.7	114.8	83.3	128.6	59.0						
	85	118.8	118.8	126.0	108.6	140.9	84.5	110.2	110.2	115.0	102.2	129.2	79.1						
	90	126.6	126.6	127.3	127.3	141.3	104.4	117.8	117.8	117.7	117.7	129.7	99.0						

Table 29. Gross cooling capacities — 12.5 tons high efficiency, heat pump (continued)

CFM	Ent DB (° F)	Entering Wet Bulb Temp (°F)						Entering Wet Bulb Temp (°F)						Entering Wet Bulb Temp (°F)					
		61		67		73		61		67		73		61		67		73	
		MBh	SHC	MBh	SHC	MBh	SHC	MBh	SHC	MBh	SHC	MBh	SHC	MBh	SHC	MBh	SHC	MBh	SHC
4500	75	114.7	102.9	129.0	75.6	143.2	46.3	104.5	97.1	117.7	70.0	130.9	40.8						
	80	119.0	119.0	129.6	99.4	144.3	70.3	110.0	110.0	118.4	93.8	132.1	64.8						
	85	127.4	127.4	130.2	121.9	145.0	94.2	118.1	118.1	119.3	116.2	132.8	88.7						
	90	135.9	135.9	136.1	136.1	145.5	118.0	126.3	126.3	126.1	126.1	133.5	111.5						
5000	75	117.0	110.2	131.1	80.0	145.1	47.6	106.7	104.3	119.5	74.4	138.3	44.6						
	80	123.4	123.4	131.7	106.3	146.3	74.1	114.0	114.0	120.3	99.5	133.9	68.6						
	85	132.2	132.2	132.9	131.2	147.0	100.5	122.5	122.5	122.3	122.3	134.6	95.0						
	90	141.0	141.0	140.7	140.7	147.8	125.7	131.0	131.0	130.7	130.7	135.6	120.0						
5500	75	119.2	117.3	132.8	84.2	147.3	48.9	108.9	108.9	121.0	78.6	133.8	43.2						
	80	127.3	127.3	133.6	111.9	148.0	77.8	117.5	117.5	122.1	106.0	135.4	72.3						
	85	136.3	136.3	136.5	136.5	148.7	106.7	126.2	126.2	126.4	126.4	136.1	101.2						
	90	145.5	145.5	145.1	145.1	149.9	134.1	135.0	135.0	134.6	134.6	137.5	128.4						
6000	75	121.4	121.4	134.2	88.4	147.9	49.9	111.7	111.7	122.3	82.7	134.8	44.3						
	80	130.6	130.6	134.8	117.9	149.5	81.4	120.5	120.5	123.6	112.3	136.6	75.9						
	85	139.9	139.9	139.6	139.6	150.2	112.8	129.5	129.5	129.7	129.7	137.4	105.7						
	90	149.4	149.4	148.9	148.9	151.7	142.4	138.6	138.6	138.8	138.8	139.4	136.6						

Notes:

1. All capacities shown are gross and have not considered indoor fan heat. To obtain NET cooling capacity subtract indoor fan heat. For indoor fan heat formula, refer to appropriate airflow table notes.
2. MBh = Total gross capacity
3. SHC = Sensible heat capacity

Table 30. Gross cooling capacities — 15 tons high efficiency, heat pump

CFM	Ent DB (° F)	Entering Wet Bulb Temp (°F)						Entering Wet Bulb Temp (°F)						Entering Wet Bulb Temp (°F)					
		61		67		73		61		67		73		61		67		73	
		MBh	SHC	MBh	SHC	MBh	SHC	MBh	SHC	MBh	SHC	MBh	SHC	MBh	SHC	MBh	SHC	MBh	SHC
		Ambient Temperature 85°F						Ambient Temperature 95°F						Ambient Temperature 105°F					
4500	75	165.6	131.5	185.1	103.1	205.6	73.1	156.7	126.6	175.4	98.3	194.8	68.9	147.2	121.5	165.1	93.2	183.3	63.9
	80	166.4	154.4	185.7	127.1	206.4	97.8	157.7	149.4	176.1	122.2	195.9	93.1	148.6	144.2	165.9	117.2	184.8	88.1
	85	171.5	171.5	186.2	150.9	207.1	121.8	164.1	164.1	176.7	146.1	196.7	117.1	156.2	156.2	166.5	141.1	185.7	112.2
	90	181.4	181.4	187.1	173.7	207.6	145.7	173.8	173.8	177.9	168.8	197.3	141.1	165.7	165.7	168.1	163.7	186.3	136.1
5400	75	171.7	145.4	191.3	111.4	211.3	76.1	162.4	140.4	181.1	106.5	200.0	71.3	152.5	133.8	170.3	101.3	188.0	66.2
	80	173.9	172.7	192.0	139.9	212.7	104.9	165.2	165.2	181.9	135.0	201.7	100.1	156.8	156.8	171.2	129.8	190.0	95.1
	85	183.7	183.7	192.9	168.3	213.6	133.5	175.7	175.7	182.9	162.1	202.7	128.8	167.0	167.0	172.4	156.8	191.1	123.8
	90	194.5	194.5	195.5	195.5	214.1	162.0	186.2	186.2	186.5	186.5	203.3	157.2	177.4	177.4	177.7	177.7	191.9	152.3
6000	75	175.0	153.0	194.5	116.6	214.2	77.6	165.5	147.8	184.0	111.7	202.6	72.7	155.5	142.3	173.0	106.5	188.8	67.1
	80	179.4	179.4	195.3	148.1	215.9	109.5	171.1	171.1	184.9	143.1	204.6	104.6	162.3	162.3	173.9	138.0	192.7	99.6
	85	190.5	190.5	196.6	178.0	216.9	141.1	182.1	182.1	186.5	172.9	205.7	136.3	173.0	173.0	175.9	167.6	193.8	131.3
	90	201.7	201.7	202.0	202.0	216.5	172.1	193.1	193.1	193.4	193.4	206.5	167.8	183.8	183.8	184.1	184.1	194.8	162.8
6600	75	178.0	161.4	197.1	121.7	216.6	79.0	168.4	156.1	186.5	116.7	204.8	74.1	158.2	150.6	175.2	111.5	192.3	69.1
	80	184.9	184.9	198.0	156.1	218.6	113.9	176.3	176.3	187.4	151.2	207.1	109.0	167.1	167.1	176.2	146.0	195.0	104.0
	85	196.4	196.4	200.0	188.7	218.5	148.0	187.6	187.6	189.8	183.6	208.2	143.6	178.2	178.2	179.2	178.2	196.1	138.6
	90	208.0	208.0	208.4	208.4	219.4	182.5	199.0	199.0	199.3	199.3	209.3	178.1	189.3	189.3	189.6	189.6	197.4	170.9
7200	75	180.7	169.6	199.4	126.7	218.7	80.4	171.0	164.3	188.5	121.6	206.6	75.5	160.8	158.7	177.0	116.4	193.9	70.4
	80	189.7	189.7	200.4	164.0	220.9	118.2	180.8	180.8	189.6	156.9	209.2	113.3	170.9	170.9	178.4	151.4	196.8	108.3
	85	201.6	201.6	203.2	199.2	220.8	155.2	192.5	192.5	193.1	193.1	210.3	150.8	182.7	182.7	182.8	182.8	198.0	145.8
	90	213.6	213.6	213.9	213.9	222.0	190.5	204.2	204.2	204.5	204.5	211.8	185.9	194.2	194.2	194.5	194.5	199.9	180.6
		Ambient Temperature 115°F						Ambient Temperature 125°F											
4500	75	137.2	116.1	154.2	88	171.3	58.7	126.4	109.3	142.6	82.5	158.4	53.3						
	80	138.9	138.8	155.0	111.9	173.0	83.0	129.5	129.5	143.5	106.5	160.5	77.7						
	85	147.7	147.7	155.8	135.8	174.0	107.1	138.6	138.6	144.4	129.0	161.5	101.8						
	90	157.1	157.1	157.8	157.8	174.7	131.1	147.8	147.8	148.1	148.1	162.3	125.8						
5400	75	142.1	128.1	158.9	96.0	175.4	61.0	131.1	122.2	146.8	90.4	162.0	55.5						
	80	147.8	147.8	159.9	124.5	177.8	90.0	138.1	138.1	147.8	119.0	164.7	84.6						
	85	157.8	157.8	161.4	151.2	178.9	118.6	148.0	148.0	149.8	145.5	165.9	113.3						
	90	168.0	168.0	168.3	168.3	179.7	147.2	157.8	157.8	158.1	158.1	166.9	140.0						

Table 30. Gross cooling capacities — 15 tons high efficiency, heat pump (continued)

CFM	Ent DB (° F)	Entering Wet Bulb Temp (°F)						Entering Wet Bulb Temp (°F)						Entering Wet Bulb Temp (°F)					
		61		67		73		61		67		73		61		67		73	
		MBh	SHC	MBh	SHC	MBh	SHC	MBh	SHC	MBh	SHC	MBh	SHC	MBh	SHC	MBh	SHC	MBh	SHC
6000	75	144.9	136.5	161.3	101.1	177.5	62.4	133.8	130.5	148.9	95.5	163.8	56.9						
	80	152.9	152.9	162.3	132.7	180.2	94.4	142.8	142.8	150.1	124.9	166.8	89.0						
	85	163.4	163.4	164.7	162.0	181.3	126.1	153.1	153.1	153.3	153.3	168.1	120.7						
	90	173.9	173.9	174.2	174.2	182.5	155.6	163.3	163.3	163.6	163.6	169.5	149.9						
6600	75	147.6	144.8	163.3	106.1	177.6	63.2	136.5	136.5	150.6	100.5	165.1	58.2						
	80	157.4	157.4	164.5	138.3	182.2	98.8	146.9	146.9	152.2	132.3	168.6	93.4						
	85	168.2	168.2	168.3	168.3	183.4	133.4	157.5	157.5	157.7	157.7	169.9	128.0						
	90	179.1	179.1	179.3	179.3	185.0	165.4	168.1	168.1	168.3	168.3	171.9	159.6						
7200	75	150.2	150.2	164.9	111.0	180.4	65.0	139.7	139.7	152.0	105.3	166.0	59.5						
	80	161.3	161.3	166.6	145.6	183.8	103.0	150.5	150.5	154.1	139.5	170.0	97.6						
	85	172.4	172.4	172.6	172.6	185.2	140.6	161.3	161.3	161.5	161.5	171.5	135.1						
	90	183.6	183.6	183.8	183.8	187.4	175.0	172.2	172.2	171.7	171.7	174.2	169.2						

Notes:

1. All capacities shown are gross and have not considered indoor fan heat. To obtain NET cooling capacity subtract indoor fan heat. For indoor fan heat formula, refer to appropriate airflow table notes.
2. MBh = Total gross capacity
3. SHC = Sensible heat capacity

Table 31. Gross cooling capacities — 17.5 tons high efficiency, heat pump

CFM	Ent DB (° F)	Entering Wet Bulb Temp (°F)						Entering Wet Bulb Temp (°F)						Entering Wet Bulb Temp (°F)					
		61		67		73		61		67		73		61		67		73	
		MBh	SHC	MBh	SHC	MBh	SHC	MBh	SHC	MBh	SHC	MBh	SHC	MBh	SHC	MBh	SHC	MBh	SHC
		Ambient Temperature 85°F						Ambient Temperature 95°F						Ambient Temperature 105°F					
5250	75	190.0	151.5	210.9	118.3	232.1	83.7	180.3	146.3	200.3	113.0	220.1	78.5	170.3	140.8	189.3	107.7	206.0	72.0
	80	191.2	177.4	211.9	145.9	234.1	111.7	181.9	172.0	201.5	140.7	222.5	106.6	172.2	166.4	190.5	135.3	208.7	100.6
	85	197.2	197.2	212.7	173.3	235.3	139.5	189.1	189.1	202.3	168.2	222.0	133.6	180.5	180.5	190.2	162.3	210.1	128.4
	90	208.2	208.2	214.1	199.2	236.2	167.0	199.9	199.9	204.1	193.8	222.9	161.2	191.1	191.1	192.4	187.7	211.0	155.9
6300	75	196.6	167.2	217.5	127.5	238.1	86.4	186.4	159.6	206.4	122.2	223.6	80.4	176.0	153.8	194.8	116.7	210.6	75.1
	80	199.6	197.8	218.7	160.3	240.9	119.7	190.1	190.1	207.6	155.0	226.7	113.7	180.9	180.9	196.1	149.6	214.1	108.4
	85	210.4	210.4	219.9	190.9	242.3	152.7	201.5	201.5	209.1	185.3	228.2	146.7	192.2	192.2	196.5	178.9	215.6	141.3
	90	222.4	222.4	223.5	223.5	241.0	184.5	213.2	213.2	213.5	213.5	229.1	179.4	202.3	202.3	202.6	202.6	216.7	174.1
7000	75	200.1	174.8	221.0	133.4	239.0	87.3	189.9	169.0	209.5	128.0	226.2	82.0	179.3	163.0	197.6	122.5	212.8	76.6
	80	205.3	205.3	222.2	169.5	242.2	124.0	196.3	196.3	210.8	164.2	229.8	118.8	186.8	186.8	199.0	158.7	216.8	113.4
	85	217.7	217.7	224.1	203.0	243.6	160.3	208.4	208.4	213.1	197.4	231.3	155.1	198.5	198.5	200.2	190.8	218.4	149.7
	90	228.7	228.7	230.6	230.6	244.6	196.4	219.1	219.1	220.9	220.9	232.5	191.3	208.9	208.9	209.2	209.2	219.7	182.7
7700	75	203.5	184.0	223.8	139.1	241.4	88.9	193.0	178.1	212.1	133.7	228.3	83.5	182.2	172.0	199.9	128.1	214.5	77.9
	80	211.3	211.3	225.1	178.5	245.0	128.9	201.8	201.8	213.6	173.2	232.3	123.7	191.9	191.9	201.5	167.7	219.0	118.3
	85	224.0	224.0	227.9	214.8	246.5	168.5	214.3	214.3	216.8	209.1	233.9	163.3	204.0	204.0	203.7	202.4	220.8	157.9
	90	235.3	235.3	237.3	237.3	247.8	208.0	225.2	225.2	227.2	227.2	235.4	202.9	214.6	214.6	214.9	214.9	222.6	193.4
8400	75	206.5	193.0	226.2	144.6	243.3	90.3	195.9	187.0	214.2	139.2	229.9	85.0	185.0	180.8	201.8	133.6	215.8	79.5
	80	216.4	216.4	227.7	187.4	247.3	133.7	206.6	206.6	215.9	178.2	234.4	128.4	196.3	196.3	203.8	172.0	220.9	123.0
	85	229.6	229.6	231.5	226.4	248.9	176.6	219.4	219.4	220.3	220.3	236.1	171.3	208.8	208.8	207.4	207.4	222.7	165.9
	90	241.1	241.0	243.2	243.2	250.6	215.6	230.6	230.6	232.8	232.8	238.1	209.9	219.6	219.6	219.8	219.8	225.1	203.9
		Ambient Temperature 115°F						Ambient Temperature 125°F											
5250	75	159.9	135.3	177.9	102.2	194.7	67.7	148.9	127.2	165.8	96.5	181.2	62.1						
	80	162.2	160.6	179.1	129.8	197.9	95.9	152.0	152.0	167.1	124.1	184.7	90.3						
	85	171.5	171.5	180.1	155.3	199.4	123.7	161.9	161.9	168.3	149.2	186.3	118.1						
	90	181.8	181.8	182.8	182.6	200.4	151.3	171.9	171.9	172.2	172.2	185.6	145.0						
6300	75	165.2	147.7	182.8	111.1	198.9	70.2	154.0	141.3	170.1	105.4	192.4	67.3						
	80	171.3	171.3	184.1	144.0	202.9	103.7	161.2	161.2	171.6	138.2	189.0	98.0						
	85	182.3	182.3	186.3	173.6	204.6	136.7	171.8	171.8	174.1	167.4	190.9	131.0						
	90	192.1	192.1	193.7	193.7	205.8	169.5	181.3	181.3	182.9	182.9	192.2	160.4						
7000	75	168.3	156.8	185.2	116.9	200.7	71.7	156.8	150.3	172.2	111.0	194.1	68.7						
	80	176.8	176.8	186.7	149.7	205.4	108.7	166.2	166.2	174.0	143.2	191.2	103.0						
	85	188.2	188.2	189.9	185.4	207.2	145.0	177.2	177.2	177.8	177.8	193.2	139.4						
	90	198.2	198.2	200.0	200.0	208.8	177.6	188.4	188.4	188.6	188.6	195.1	171.3						

Table 31. Gross cooling capacities — 17.5 tons high efficiency, heat pump (continued)

CFM	Ent DB (° F)	Entering Wet Bulb Temp (°F)						Entering Wet Bulb Temp (°F)						Entering Wet Bulb Temp (°F)					
		61		67		73		61		67		73		61		67		73	
		MBh	SHC	MBh	SHC	MBh	SHC	MBh	SHC	MBh	SHC	MBh	SHC	MBh	SHC	MBh	SHC	MBh	SHC
7700	75	171.1	165.7	187.3	122.4	202.1	73.1	159.5	159.1	174.0	116.6	186.9	67.3						
	80	181.4	181.4	189.2	157.8	207.4	113.5	170.4	170.4	176.3	151.1	192.9	107.8						
	85	191.9	191.9	193.6	193.6	209.4	153.2	181.8	181.8	182.1	182.1	195.1	147.5						
	90	205.2	205.2	205.4	205.4	211.5	188.3	193.3	193.3	193.6	193.6	197.7	181.9						
8400	75	173.8	173.8	188.9	127.9	203.0	74.5	162.4	162.4	175.4	121.9	187.5	68.6						
	80	185.5	185.5	191.4	165.6	209.1	118.3	174.1	174.1	178.3	158.9	194.4	112.5						
	85	156.6	156.6	197.9	197.9	211.2	161.2	185.8	185.8	186.0	186.0	196.7	155.5						
	90	209.9	209.9	210.1	210.1	214.1	198.7	197.6	197.6	197.8	197.8	200.1	192.2						

Notes:

1. All capacities shown are gross and have not considered indoor fan heat. To obtain NET cooling capacity subtract indoor fan heat. For indoor fan heat formula, refer to appropriate airflow table notes.
2. MBh = Total gross capacity
3. SHC = Sensible heat capacity

Table 32. Gross cooling capacities — 20 tons high efficiency, heat pump

CFM	Ent DB (° F)	Entering Wet Bulb Temp (°F)						Entering Wet Bulb Temp (°F)						Entering Wet Bulb Temp (°F)					
		61		67		73		61		67		73		61		67		73	
		MBh	SHC	MBh	SHC	MBh	SHC	MBh	SHC	MBh	SHC	MBh	SHC	MBh	SHC	MBh	SHC	MBh	SHC
		Ambient Temperature 85°F						Ambient Temperature 95°F						Ambient Temperature 105°F					
6000	75	220.7	177.3	246.6	138.5	272.3	97.8	208.9	170.9	233.7	132.1	257.0	91.1	196.3	164.2	219.9	125.4	242.3	84.8
	80	222.5	208.5	247.7	171.2	274.4	130.9	211.1	201.9	234.9	164.9	260.4	124.7	198.9	195.0	221.1	158.2	245.3	118.1
	85	230.8	230.8	248.7	203.9	274.7	163.4	220.9	220.9	236.1	197.6	260.9	157.3	210.2	210.2	222.3	189.3	246.8	151.1
	90	244.3	244.3	250.0	234.7	276.5	196.5	234.2	234.2	238.4	228.6	262.8	190.4	223.2	223.2	225.3	221.8	247.9	183.9
7200	75	228.9	194.8	254.9	150.0	279.8	101.1	216.7	188.0	241.3	143.5	264.6	94.8	203.6	180.7	226.7	136.7	248.3	88.0
	80	233.2	233.2	256.2	189.1	282.8	140.8	222.2	222.2	242.7	182.6	268.1	134.5	210.7	210.7	228.2	175.8	252.2	127.8
	85	247.3	247.3	257.2	225.8	284.2	180.1	236.5	236.5	244.9	219.5	269.6	173.8	224.7	224.7	230.0	212.0	252.9	166.8
	90	262.1	262.1	262.0	262.0	285.4	219.2	251.0	251.0	250.8	250.8	271.0	213.0	238.9	238.9	238.6	238.6	255.3	206.4
8000	75	233.7	206.8	259.1	157.3	283.6	103.2	221.2	199.8	245.2	150.8	268.0	96.1	207.7	192.4	230.1	143.9	251.2	90.0
	80	241.2	241.2	259.8	200.2	287.1	147.2	230.1	230.1	246.8	194.1	271.9	140.8	218.1	218.1	231.8	184.4	255.6	134.1
	85	256.4	256.4	262.5	241.0	288.5	190.6	245.1	245.1	249.1	234.2	273.5	184.3	232.7	232.7	235.6	227.4	257.4	177.6
	90	270.3	270.3	271.6	271.6	290.1	234.0	258.7	258.7	259.9	259.9	275.3	227.8	245.9	245.9	247.1	247.1	259.4	218.0
8800	75	237.8	218.4	262.6	164.4	296.3	108.8	225.1	211.4	248.3	157.8	270.7	98.7	211.5	203.8	232.9	150.9	253.4	91.9
	80	248.5	248.5	263.5	211.6	290.6	153.3	237.0	237.0	250.2	202.3	275.1	147.0	224.5	224.5	235.3	194.8	258.5	140.2
	85	264.4	264.4	267.3	255.9	292.1	200.9	252.6	252.6	253.9	249.1	276.9	194.6	239.7	239.7	239.6	239.6	260.4	187.9
	90	278.6	278.6	280.0	280.0	294.3	245.7	267.4	267.4	267.8	267.8	279.3	238.9	254.0	254.0	254.4	254.4	263.2	231.7
9600	75	241.7	229.9	265.6	171.4	288.1	106.7	228.8	222.7	250.9	164.8	272.8	100.6	215.1	215.1	235.2	157.8	254.9	93.6
	80	255.0	255.0	266.7	219.3	293.5	159.4	243.0	243.0	253.5	212.6	277.7	153.0	230.1	230.1	238.3	205.0	260.8	146.2
	85	271.4	271.4	272.0	270.6	295.3	211.2	259.1	259.1	258.7	258.7	279.7	204.8	244.1	244.1	246.1	246.1	263.0	198.1
	90	285.9	285.9	287.4	287.4	298.2	259.4	274.3	274.3	274.7	274.7	282.8	252.4	259.6	259.5	260.8	260.8	266.6	245.1
		Ambient Temperature 115°F						Ambient Temperature 125°F											
6000	75	182.7	155.2	205.0	118.4	225.6	77.8	168.4	147.2	189.0	111.0	207.7	70.5						
	80	186.1	186.1	206.3	151.2	229.1	111.2	173.8	173.8	190.4	143.8	211.7	104.0						
	85	198.5	198.5	207.8	181.9	230.7	144.2	185.9	185.9	192.3	174.1	213.3	137.0						
	90	211.3	211.3	211.2	211.2	231.8	177.0	198.3	198.3	198.2	198.2	214.6	169.8						
7200	75	189.6	173.0	211.0	129.5	230.7	80.9	174.7	164.8	194.1	121.9	211.1	73.2						
	80	198.4	198.4	211.8	165.8	235.2	120.9	185.0	185.0	196.0	157.9	216.9	113.5						
	85	212.0	212.0	215.0	204.5	236.9	160.2	198.2	198.2	199.7	196.8	218.8	152.9						
	90	225.8	225.8	225.5	225.5	238.6	196.7	211.6	211.6	211.2	211.2	220.9	188.7						
8000	75	193.5	184.5	214.0	136.6	233.0	82.8	178.4	176.2	196.6	129.0	213.3	75.3						
	80	205.2	205.2	215.4	176.3	238.2	127.1	191.1	191.1	199.3	168.3	219.4	119.7						
	85	219.4	219.4	220.5	219.7	240.2	170.6	204.9	204.9	205.2	205.2	221.6	163.3						
	90	233.8	233.8	233.3	233.3	242.6	210.4	218.8	218.8	218.3	218.3	223.6	202.0						
8800	75	197.1	195.9	216.4	143.6	233.7	84.3	182.2	182.2	198.5	135.9	214.2	77.0						
	80	211.0	211.0	218.5	186.5	240.6	133.1	196.4	196.4	202.2	178.4	221.4	125.7						
	85	225.8	225.8	225.3	225.3	242.8	180.9	210.7	210.7	210.2	210.2	224.0	168.6						
	90	240.7	240.7	240.0	240.0	246.0	224.0	225.1	225.1	224.4	224.4	226.8	215.4						

Table 32. Gross cooling capacities — 20 tons high efficiency, heat pump (continued)

CFM	Ent DB (° F)	Entering Wet Bulb Temp (°F)						Entering Wet Bulb Temp (°F)						Entering Wet Bulb Temp (°F)					
		61		67		73		61		67		73		61		67		73	
		MBh	SHC	MBh	SHC	MBh	SHC	MBh	SHC	MBh	SHC	MBh	SHC	MBh	SHC	MBh	SHC	MBh	SHC
9600	75	201.0	201.0	218.3	150.4	234.7	86.0	186.5	186.5	200.1	142.6	214.1	78.3						
	80	216.1	216.1	222.0	197.0	242.6	139.1	201.0	201.0	204.7	188.3	223.0	131.6						
	85	230.5	230.5	230.8	230.8	244.0	185.6	215.7	215.7	216.0	216.0	226.2	177.5						
	90	246.7	246.7	245.9	245.9	249.3	237.3	230.5	230.5	229.7	229.7	230.0	228.6						

Notes:

1. All capacities shown are gross and have not considered indoor fan heat. To obtain NET cooling capacity subtract indoor fan heat. For indoor fan heat formula, refer to appropriate airflow table notes.
2. MBh = Total gross capacity
3. SHC = Sensible heat capacity

Table 33. Gross cooling capacities — 25 tons high efficiency, heat pump

CFM	Ent DB (° F)	Entering Wet Bulb Temp (°F)						Entering Wet Bulb Temp (°F)						Entering Wet Bulb Temp (°F)					
		61		67		73		61		67		73		61		67		73	
		MBh	SHC	MBh	SHC	MBh	SHC	MBh	SHC	MBh	SHC	MBh	SHC	MBh	SHC	MBh	SHC	MBh	SHC
		Ambient Temperature 85°F						Ambient Temperature 95°F						Ambient Temperature 105°F					
7500	75	246.3	201.7	273.9	155.8	303.7	108.7	233.3	194.6	259.6	148.9	287.9	101.8	219.2	187.2	244.2	141.5	271.1	94.6
	80	248.9	239.1	274.5	193.7	304.1	146.8	236.3	232.0	260.3	186.8	288.4	140.0	223.1	223.1	245.0	179.4	271.7	132.8
	85	259.8	259.8	275.4	231.5	304.7	184.8	248.6	248.6	261.4	224.7	289.1	178.0	236.3	236.3	246.3	217.4	272.5	170.8
	90	274.3	274.3	278.4	268.9	305.2	222.7	262.8	262.8	265.0	262.0	289.7	215.9	250.2	250.2	250.9	250.9	273.2	208.7
9000	75	254.4	222.3	281.7	167.9	311.5	112.2	240.9	215.2	266.7	160.8	295.0	105.3	226.3	207.7	250.7	153.3	277.4	98.0
	80	260.3	260.3	282.4	212.5	312.0	157.2	248.6	248.6	267.5	205.5	295.7	150.3	235.7	235.7	251.5	198.1	278.2	143.0
	85	275.8	275.8	284.4	257.5	312.7	202.0	263.6	263.6	269.9	250.6	296.5	195.1	250.4	250.4	254.4	241.7	279.1	187.9
	90	291.4	291.4	291.6	291.6	313.4	246.7	278.9	278.9	279.3	279.3	297.4	239.9	265.3	265.3	265.7	265.7	280.3	232.8
10000	75	259.0	235.4	285.8	175.5	315.5	114.4	245.2	226.8	270.4	168.3	298.6	107.4	230.5	219.0	254.0	160.8	280.5	100.5
	80	268.6	268.6	286.6	224.5	316.1	163.8	256.2	256.2	271.3	217.4	299.4	156.8	242.8	242.8	255.1	210.0	281.6	149.5
	85	284.6	284.6	289.7	272.7	316.9	213.0	271.8	271.8	275.0	265.5	300.3	206.1	258.0	258.0	259.5	257.9	282.5	198.8
	90	300.8	300.8	301.2	301.2	318.0	262.2	287.7	287.7	288.1	288.1	301.7	255.4	273.5	273.5	273.8	273.8	284.3	248.2
11000	75	263.1	246.6	289.2	182.8	318.9	116.5	249.2	239.2	273.5	175.6	301.6	109.4	234.4	231.3	256.9	168.1	283.2	102.0
	80	275.6	275.6	290.1	236.1	319.6	170.2	262.7	262.7	274.7	229.0	302.6	163.1	248.9	248.9	258.3	221.6	284.4	155.8
	85	292.1	292.1	294.6	288.5	320.4	223.7	278.9	278.9	280.0	280.0	303.5	216.7	264.6	264.6	264.7	264.7	285.4	209.4
	90	308.9	308.9	309.3	309.3	322.1	277.3	295.3	295.3	295.6	295.6	305.5	270.4	280.5	280.5	280.8	280.8	287.9	263.2
12000	75	267.0	258.6	292.1	189.8	321.7	118.5	253.0	251.1	276.2	182.6	304.1	111.4	238.3	238.3	259.3	175.0	285.4	103.9
	80	281.7	281.7	293.4	247.4	322.6	176.3	268.4	268.4	277.8	240.3	305.2	169.3	254.2	254.2	261.2	232.8	286.9	161.9
	85	298.7	298.7	299.5	299.5	323.4	233.9	285.1	285.1	285.1	285.1	306.2	226.9	270.3	270.3	270.6	270.6	287.9	219.6
	90	316.0	316.0	316.4	316.4	325.8	291.9	301.9	301.9	302.3	302.3	309.1	285.1	286.6	286.6	284.4	284.4	291.4	275.3
		Ambient Temperature 115°F						Ambient Temperature 125°F											
7500	75	204.2	179.4	227.8	133.8	253.1	87.1	188.1	171.2	210.2	125.7	233.7	79.1						
	80	209.7	209.7	228.6	171.7	253.8	125.2	195.8	195.8	211.1	163.7	234.8	117.4						
	85	223.1	223.1	230.2	209.8	254.7	163.3	208.9	208.9	213.1	200.4	235.7	155.5						
	90	236.7	236.7	237.1	237.1	255.5	201.3	222.0	222.0	222.4	222.4	236.7	193.5						
9000	75	210.9	198.2	233.6	145.5	258.6	90.3	194.6	189.6	215.3	137.4	238.5	82.4						
	80	221.8	221.8	234.6	190.3	259.7	135.4	206.9	206.9	216.5	182.2	240.0	127.5						
	85	236.2	236.2	238.1	233.8	260.7	180.3	220.8	220.8	221.2	221.2	241.0	172.4						
	90	250.6	250.6	251.0	251.0	262.1	225.3	234.8	234.8	235.1	235.1	242.8	217.5						
10000	75	215.0	210.8	236.6	153.0	261.3	92.4	198.7	198.7	218.0	144.8	241.0	84.4						
	80	228.4	228.4	237.9	202.2	262.7	141.9	212.9	212.9	219.6	194.1	242.6	133.9						
	85	243.2	243.2	243.4	243.4	263.7	191.2	227.2	227.2	227.5	227.5	243.7	183.2						
	90	258.2	258.2	258.5	258.5	265.9	240.7	241.7	241.7	242.0	242.0	246.4	230.5						
11000	75	218.9	218.9	239.1	160.2	263.7	94.3	203.4	203.4	220.2	151.9	243.1	86.3						
	80	234.0	234.0	240.9	213.8	265.3	148.2	218.0	218.0	222.4	203.2	244.9	140.2						
	85	249.2	249.2	249.5	249.5	266.3	201.7	232.7	232.7	233.0	233.0	246.0	193.8						
	90	264.7	264.7	265.0	265.0	269.4	253.3	247.6	247.6	247.8	247.8	249.9	244.9						
12000	75	223.2	223.2	241.3	167.1	265.7	96.2	207.4	207.4	222.1	158.8	244.8	88.1						
	80	238.8	238.8	243.6	222.6	267.4	154.2	222.4	222.4	225.0	213.9	246.8	146.2						
	85	254.5	254.5	253.7	253.7	268.5	211.9	237.5	237.5	237.7	237.7	248.1	204.0						
	90	270.3	270.3	270.5	270.5	272.8	267.3	-	-	-	-	-	-						

Table 33. Gross cooling capacities — 25 tons high efficiency, heat pump (continued)

CFM	Ent DB (° F)	Entering Wet Bulb Temp (°F)						Entering Wet Bulb Temp (°F)						Entering Wet Bulb Temp (°F)					
		61		67		73		61		67		73		61		67		73	
		MBh	SHC	MBh	SHC	MBh	SHC	MBh	SHC	MBh	SHC	MBh	SHC	MBh	SHC	MBh	SHC	MBh	SHC

Notes:

1. All capacities shown are gross and have not considered indoor fan heat. To obtain NET cooling capacity subtract indoor fan heat. For indoor fan heat formula, refer to appropriate airflow table notes.
2. MBh = Total gross capacity
3. SHC = Sensible heat capacity

Table 34. Gross cooling capacities — 3 tons standard efficiency, dual fuel

CFM	Ent DB (° F)	Entering Wet Bulb Temp (°F)						Entering Wet Bulb Temp (°F)						Entering Wet Bulb Temp (°F)					
		61		67		73		61		67		73		61		67		73	
		MBh	SHC	MBh	SHC	MBh	SHC	MBh	SHC	MBh	SHC	MBh	SHC	MBh	SHC	MBh	SHC	MBh	SHC
		Ambient Temperature 85°F						Ambient Temperature 95°F						Ambient Temperature 105°F					
900	75	33.6	26.3	38.0	20.5	42.7	14.6	31.5	25.0	35.7	19.3	40.2	13.4	29.2	23.7	33.2	18.0	37.5	12.1
	80	33.7	31.1	38.1	25.5	42.7	19.6	31.6	29.8	35.8	24.3	40.3	18.4	29.4	28.5	33.3	23.0	37.6	17.1
	85	34.5	34.5	38.1	30.4	42.8	24.6	32.7	32.7	35.9	29.2	40.4	23.4	30.8	30.8	33.4	27.9	37.7	22.1
	90	36.6	36.6	38.2	35.2	42.9	29.5	34.8	34.8	36.0	34.0	40.4	28.3	32.9	32.9	33.6	32.7	37.8	27.1
1080	75	35.0	29.3	39.4	22.4	44.1	15.2	32.8	27.9	37.0	21.1	41.5	13.9	30.4	26.6	34.4	19.8	38.7	12.6
	80	35.3	35.1	39.5	28.3	44.2	21.2	33.1	33.1	37.1	27.1	41.6	20.0	31.1	31.1	34.6	25.8	38.8	18.7
	85	37.2	37.2	39.6	34.1	44.3	27.2	35.3	35.3	37.3	32.9	41.7	25.9	33.3	33.3	34.8	31.5	39.0	24.6
	90	39.5	39.5	40.0	40.0	44.4	33.1	37.6	37.6	37.7	37.7	41.9	31.9	35.5	35.5	35.6	35.6	39.1	30.6
1200	75	35.8	31.2	40.2	23.6	44.9	15.5	33.5	29.9	37.7	22.3	42.1	14.3	31.1	28.5	35.0	20.9	39.3	13.0
	80	36.4	36.4	40.3	30.2	45.0	22.2	34.4	34.4	37.8	28.9	42.3	21.0	32.3	32.3	35.2	27.6	39.5	19.7
	85	38.8	38.8	40.5	36.6	45.1	28.9	36.8	36.8	38.1	35.3	42.4	27.6	34.7	34.7	35.5	33.9	39.6	26.3
	90	41.2	41.2	41.3	41.3	45.2	35.5	39.2	39.2	39.3	39.3	42.6	34.2	37.0	37.0	37.1	37.1	39.8	32.8
1320	75	36.5	33.1	40.8	24.7	45.5	15.9	34.1	31.8	38.3	23.4	42.7	14.6	31.7	30.4	35.6	22.1	39.8	13.3
	80	37.7	37.7	40.9	32.0	45.6	23.2	36.5	36.5	38.4	30.7	42.9	22.0	34.3	34.3	35.7	29.2	40.0	20.6
	85	40.2	40.2	41.2	39.0	45.7	30.5	38.1	38.1	38.8	37.7	43.0	29.3	35.9	35.9	36.2	36.2	40.1	28.0
	90	42.7	42.7	42.8	42.8	45.9	37.8	40.6	40.6	42.0	42.0	43.2	36.3	38.3	38.3	38.4	38.4	40.4	35.0
1440	75	37.1	35.0	41.3	25.8	46.0	16.2	34.7	33.7	38.7	24.5	43.2	14.9	32.2	32.2	36.0	23.2	40.2	13.6
	80	38.8	38.8	41.5	33.6	46.2	24.2	36.7	36.7	38.9	32.3	43.4	22.9	34.4	34.4	36.2	30.9	40.4	21.6
	85	41.4	41.4	41.9	41.4	46.3	32.2	39.2	39.2	39.5	39.5	43.5	30.9	36.9	36.9	37.0	37.0	40.6	29.6
	90	44.0	44.0	44.1	44.1	46.5	39.9	41.8	41.8	41.9	41.9	43.8	38.6	39.4	39.4	39.5	39.5	40.9	37.2
		Ambient Temperature 115°F						Ambient Temperature 125°F											
900	75	26.7	22.3	30.6	16.6	34.6	10.7	24.1	20.7	27.7	15.2	31.5	9.3						
	80	26.9	26.9	30.7	21.6	34.8	15.8	24.6	24.6	27.8	20.2	31.7	14.4						
	85	28.8	28.8	30.8	26.4	34.9	20.8	26.5	26.5	28.0	25.0	31.8	19.4						
	90	30.8	30.8	31.1	31.1	35.0	25.7	28.5	28.5	28.6	28.6	32.0	24.3						
1080	75	27.9	25.1	31.7	18.4	35.7	11.3	25.1	23.6	28.7	16.9	32.5	9.9						
	80	28.9	28.9	31.8	24.4	35.9	17.3	26.5	26.5	28.8	22.8	32.7	15.9						
	85	31.1	31.1	32.1	30.1	36.0	23.3	28.7	28.7	29.1	28.6	32.8	21.9						
	90	33.3	33.3	33.3	33.3	36.2	29.3	30.8	30.8	30.9	30.9	33.0	27.6						
1200	75	28.5	27.0	32.2	19.5	36.2	11.6	25.7	25.5	29.2	18.1	32.9	10.2						
	80	30.8	30.8	32.4	26.0	36.4	18.3	27.6	27.6	29.4	24.5	33.2	16.9						
	85	32.3	32.3	32.8	32.5	36.6	25.0	29.8	29.8	29.9	29.9	33.3	23.5						
	90	34.6	34.6	34.7	34.7	36.8	31.4	32.1	32.1	32.1	32.1	33.6	29.9						
1320	75	29.0	28.9	32.7	20.7	36.6	11.9	26.3	26.3	29.6	19.2	33.3	10.5						
	80	31.1	31.1	32.9	27.7	36.9	19.3	28.5	28.5	29.8	26.2	33.6	17.8						
	85	33.5	33.5	33.5	33.5	37.0	26.6	32.0	32.0	30.9	30.9	33.7	25.2						
	90	37.2	37.2	35.9	35.9	37.3	33.6	33.1	33.1	33.2	33.2	34.1	32.1						
1440	75	29.6	29.6	33.0	21.8	37.0	12.2	27.0	27.0	29.9	20.3	33.6	10.8						
	80	32.0	32.0	33.3	29.4	37.3	20.3	29.4	29.4	30.2	27.9	33.9	18.8						
	85	34.4	34.4	34.5	34.5	37.4	28.2	31.7	31.7	31.8	31.8	34.1	26.5						
	90	36.9	36.9	36.9	36.9	37.8	35.8	35.7	35.7	34.1	34.1	34.6	34.3						

Notes:

1. All capacities shown are gross and have not considered indoor fan heat. To obtain NET cooling capacity subtract indoor fan heat. For indoor fan heat formula, refer to appropriate airflow table notes.
2. MBh = Total gross capacity
3. SHC = Sensible heat capacity

Gross Cooling Capacities

Table 35. Gross cooling capacities — 4 tons standard efficiency, dual fuel

CFM	Ent DB (° F)	Entering Wet Bulb Temp (°F)						Entering Wet Bulb Temp (°F)						Entering Wet Bulb Temp (°F)					
		61		67		73		61		67		73		61		67		73	
		MBh	SHC	MBh	SHC	MBh	SHC	MBh	SHC	MBh	SHC	MBh	SHC	MBh	SHC	MBh	SHC	MBh	SHC
		Ambient Temperature 85°F						Ambient Temperature 95°F						Ambient Temperature 105°F					
1200	75	45.4	35.6	51.0	27.9	57.0	19.8	42.6	34.1	48.0	26.4	53.7	18.3	39.7	32.5	44.8	24.7	50.1	16.7
	80	45.5	42.1	51.1	34.5	57.1	26.5	42.9	40.5	48.1	33.0	53.8	25.0	40.0	38.9	44.9	31.3	50.3	23.4
	85	46.6	46.6	51.2	41.1	57.2	33.1	44.4	44.4	48.2	39.6	53.9	31.6	41.9	41.9	45.0	37.9	50.4	30.0
	90	49.3	49.3	51.4	47.5	57.2	39.8	47.1	47.1	48.5	46.0	54.1	38.3	44.5	44.5	45.4	44.3	50.5	36.6
1440	75	47.2	39.7	52.8	30.3	58.8	20.6	44.3	38.1	49.7	28.7	55.4	19.0	41.2	36.3	46.3	27.1	51.6	17.4
	80	47.7	47.4	52.9	38.2	59.0	28.6	44.9	44.9	49.8	36.7	55.5	27.0	42.2	42.2	46.4	35.0	51.8	25.4
	85	50.2	50.2	53.1	46.1	59.1	36.5	47.7	47.7	50.1	44.4	55.7	35.0	45.0	45.0	46.7	42.7	51.9	33.4
	90	53.2	53.2	53.7	53.7	59.2	44.5	50.6	50.6	50.8	50.8	55.8	43.0	47.8	47.8	47.9	47.9	52.1	41.3
1600	75	48.2	42.1	53.8	31.8	59.8	21.0	45.2	40.5	50.5	30.3	56.2	19.5	42.1	38.8	47.0	28.6	52.3	17.8
	80	49.0	49.0	53.9	40.6	59.9	29.9	46.5	46.5	50.7	39.1	56.4	28.4	43.8	43.8	47.2	37.4	52.5	26.7
	85	52.2	52.2	54.2	49.2	60.0	38.8	49.6	49.6	51.1	47.6	56.5	37.2	46.7	46.7	47.7	45.9	52.7	35.6
	90	55.3	55.3	55.4	55.4	60.2	47.6	52.6	52.6	52.7	52.7	56.7	46.1	49.7	49.7	49.8	49.8	52.9	44.4
1760	75	49.0	44.7	54.5	33.3	60.5	21.4	46.0	43.0	51.2	31.8	56.9	19.9	42.8	41.3	47.6	30.1	52.9	18.2
	80	50.7	50.7	54.7	43.0	60.7	31.2	48.0	48.0	51.4	41.5	57.1	29.7	45.2	45.2	47.9	39.5	53.2	28.0
	85	53.9	53.9	55.2	52.4	60.8	41.0	51.2	51.2	52.0	50.8	57.3	39.4	48.2	48.2	48.6	48.6	53.3	37.8
	90	57.2	57.2	57.3	57.3	61.0	50.7	54.4	54.4	54.5	54.5	57.5	48.8	51.3	51.3	51.4	51.4	53.7	47.1
1920	75	49.8	47.2	55.2	34.8	61.2	21.8	46.8	45.5	51.8	33.2	57.4	20.3	43.5	43.5	48.2	31.5	53.4	18.6
	80	52.1	52.1	55.4	45.4	61.4	32.5	49.4	49.4	52.1	43.5	57.7	31.0	46.4	46.4	48.5	41.8	53.7	29.3
	85	55.4	55.4	56.1	55.7	61.5	43.1	52.6	52.6	52.9	52.9	57.9	41.6	49.5	49.5	49.6	49.6	53.9	39.9
	90	58.8	58.8	58.9	58.9	61.8	53.4	55.9	55.9	56.0	56.0	58.2	51.8	52.7	52.7	52.8	52.8	54.3	50.1
		Ambient Temperature 115°F						Ambient Temperature 125°F											
1200	75	36.5	30.7	41.2	23.0	46.3	15.0	33.0	28.7	37.4	21.2	42.0	13.2						
	80	36.8	36.8	41.4	29.6	46.4	21.7	33.7	33.7	37.6	27.8	42.2	19.9						
	85	39.2	39.2	41.6	36.1	46.6	28.3	36.2	36.2	37.8	34.2	42.4	26.5						
	90	41.7	41.7	42.0	42.0	46.7	34.9	38.7	38.7	38.7	38.7	42.6	33.2						
1440	75	37.9	34.4	42.5	25.3	47.5	15.6	34.2	32.5	38.5	23.4	43.1	13.8						
	80	39.3	39.3	42.7	33.2	47.7	23.7	36.1	36.1	38.7	31.4	43.4	21.8						
	85	42.0	42.0	43.1	40.9	47.9	31.6	38.8	38.8	39.2	39.0	43.5	29.8						
	90	44.8	44.8	44.9	44.9	48.1	39.6	41.4	41.4	41.5	41.5	43.8	37.5						
1600	75	38.6	36.9	43.2	26.8	48.2	16.1	35.0	35.0	39.1	24.9	43.7	14.2						
	80	40.7	40.7	43.4	35.6	48.4	25.0	37.4	37.4	39.4	33.5	43.9	23.1						
	85	43.6	43.6	44.0	44.0	48.6	33.8	40.2	40.2	40.2	40.2	44.1	32.0						
	90	46.4	46.4	46.5	46.5	48.9	42.4	42.9	42.9	43.0	43.0	44.5	40.5						
1760	75	39.4	39.4	43.8	28.3	48.7	16.5	35.8	35.8	39.6	26.4	44.1	14.6						
	80	42.0	42.0	44.1	37.7	49.0	26.3	39.8	39.8	39.9	35.7	44.4	24.4						
	85	44.9	44.9	45.0	45.0	49.1	36.0	41.4	41.4	41.4	41.4	44.6	34.2						
	90	47.9	47.9	48.0	48.0	49.6	45.3	46.0	46.0	44.3	44.3	45.1	43.4						
1920	75	40.1	40.1	44.2	29.7	49.1	16.8	36.7	36.7	40.0	27.9	44.5	15.0						
	80	43.1	43.1	44.6	39.9	49.4	27.5	39.5	39.5	40.5	38.0	44.8	25.7						
	85	46.1	46.1	46.2	46.2	49.6	38.2	42.4	42.4	42.5	42.5	45.1	35.9						
	90	49.2	49.2	49.2	49.2	50.2	48.3	45.3	45.3	45.4	45.4	45.7	45.7						

Notes:

1. All capacities shown are gross and have not considered indoor fan heat. To obtain NET cooling capacity subtract indoor fan heat. For indoor fan heat formula, refer to appropriate airflow table notes.
2. MBh = Total gross capacity
3. SHC = Sensible heat capacity

Table 36. Gross cooling capacities — 5 tons standard efficiency, dual fuel

CFM	Ent DB (° F)	Entering Wet Bulb Temp (°F)						Entering Wet Bulb Temp (°F)						Entering Wet Bulb Temp (°F)					
		61		67		73		61		67		73		61		67		73	
		MBh	SHC	MBh	SHC	MBh	SHC	MBh	SHC	MBh	SHC	MBh	SHC	MBh	SHC	MBh	SHC	MBh	SHC
		Ambient Temperature 85°F						Ambient Temperature 95°F						Ambient Temperature 105°F					
1500	75	54.6	43.8	60.9	33.9	67.5	23.6	51.4	42.1	57.5	32.2	63.8	21.9	48.1	40.2	53.8	30.4	59.8	20.2
	80	54.9	51.8	61.0	42.2	67.6	31.9	51.8	50.1	57.6	40.4	63.9	30.3	48.5	48.2	54.0	38.7	59.9	28.5
	85	56.6	56.6	61.1	50.4	67.7	40.2	53.9	53.9	57.8	48.7	64.0	38.5	51.1	51.1	54.2	46.9	60.1	36.8
	90	59.8	59.8	61.5	58.4	67.8	48.5	57.1	57.1	58.2	56.6	64.1	46.8	54.2	54.2	54.7	54.7	60.2	45.1

Table 36. Gross cooling capacities — 5 tons standard efficiency, dual fuel (continued)

CFM	Ent DB (° F)	Entering Wet Bulb Temp (°F)						Entering Wet Bulb Temp (°F)						Entering Wet Bulb Temp (°F)					
		61		67		73		61		67		73		61		67		73	
		MBh	SHC	MBh	SHC	MBh	SHC	MBh	SHC	MBh	SHC	MBh	SHC	MBh	SHC	MBh	SHC	MBh	SHC
1800	75	56.6	48.8	62.8	36.8	69.4	24.4	53.3	46.7	59.3	35.1	65.4	22.7	49.8	44.9	55.4	33.3	61.3	21.0
	80	57.3	57.3	63.0	46.7	69.5	34.4	54.3	54.3	59.4	45.0	65.6	32.7	51.3	51.3	55.6	43.2	61.5	30.9
	85	60.5	60.5	63.3	56.3	69.6	44.3	57.7	57.7	59.8	54.5	65.7	42.7	54.6	54.6	56.0	52.7	61.6	40.9
	90	64.0	64.0	64.1	64.1	69.7	54.2	61.0	61.0	61.1	61.1	65.9	52.6	57.8	57.8	57.9	57.9	61.8	50.8
2000	75	57.7	51.7	63.8	38.7	70.3	24.9	54.3	49.9	60.1	36.9	66.3	23.2	50.8	48.0	56.2	35.1	62.0	21.5
	80	59.2	59.2	64.0	49.7	70.4	36.0	56.2	56.2	60.3	47.9	66.5	34.3	53.1	53.1	56.5	46.1	62.2	32.5
	85	62.7	62.7	64.4	60.3	70.6	47.1	59.7	59.7	60.9	58.5	66.6	45.4	56.5	56.5	57.1	56.7	62.4	43.6
	90	66.3	66.3	66.4	66.4	70.8	58.1	63.1	63.1	63.3	63.3	66.9	56.0	59.8	59.8	59.9	59.9	62.7	54.2
2200	75	58.6	54.8	64.6	40.5	71.0	25.4	55.2	53.0	60.9	38.8	67.0	23.7	51.7	51.1	56.9	36.9	62.6	21.9
	80	61.0	61.0	64.9	52.6	71.2	37.6	59.8	59.8	61.1	50.5	67.2	35.9	54.6	54.6	57.2	48.6	62.9	34.1
	85	64.6	64.6	65.5	64.3	71.4	49.8	61.5	61.5	61.9	61.9	67.3	48.1	58.1	58.1	58.2	58.2	63.1	46.3
	90	68.2	68.2	68.3	68.3	71.7	61.5	65.0	65.0	65.1	65.1	67.7	59.7	61.5	61.5	61.6	61.6	63.5	57.9
2400	75	59.5	57.9	65.3	42.3	71.7	25.9	56.1	56.1	61.5	40.6	67.5	24.2	52.5	52.5	57.5	38.7	63.1	22.4
	80	62.5	62.5	65.6	55.1	71.9	39.2	59.3	59.3	61.9	53.3	67.8	37.5	55.9	55.9	57.9	51.4	63.4	35.7
	85	66.2	66.2	66.5	66.5	72.0	52.4	63.0	63.0	63.0	63.0	68.0	50.7	59.5	59.5	59.5	59.5	63.6	49.0
	90	70.0	70.0	70.1	70.1	72.5	65.2	66.6	66.6	66.7	66.7	68.5	63.4	63.0	63.0	63.0	63.0	64.2	61.6
		Ambient Temperature 115°F						Ambient Temperature 125°F											
1500	75	44.5	38.1	50.0	28.5	55.5	18.4	40.7	36.1	45.8	26.6	51.1	16.5						
	80	45.0	45.0	50.1	36.8	55.7	26.7	41.8	41.8	46.0	34.9	51.3	24.8						
	85	48.0	48.0	50.4	44.8	55.9	35.0	44.8	44.8	46.3	42.8	51.4	33.1						
	90	51.0	51.0	51.1	51.1	56.0	43.3	47.6	47.6	47.7	47.7	51.6	41.4						
1800	75	46.1	42.9	51.4	31.4	56.9	19.1	42.2	40.8	47.1	29.4	52.2	17.2						
	80	48.1	48.1	51.6	41.3	57.1	29.1	44.6	44.6	47.3	39.0	52.5	27.2						
	85	51.2	51.2	52.1	50.8	57.3	39.1	47.7	47.7	48.0	48.0	52.6	37.2						
	90	54.4	54.4	54.5	54.5	57.5	48.6	50.7	50.7	50.8	50.8	53.0	46.7						
2000	75	47.0	46.0	52.1	33.2	57.5	19.6	43.1	43.1	47.7	31.2	52.8	17.7						
	80	49.7	49.7	52.4	43.8	57.8	30.7	46.1	46.1	48.1	41.8	53.1	28.8						
	85	53.0	53.0	53.1	53.1	58.0	41.8	49.2	49.2	49.3	49.3	53.3	39.9						
	90	56.2	56.2	56.3	56.3	58.3	52.3	52.3	52.3	52.4	52.4	53.7	50.3						
2200	75	47.9	47.9	52.7	35.0	58.1	20.1	44.1	44.1	48.2	33.0	53.3	18.2						
	80	51.1	51.1	53.1	46.7	58.3	32.3	47.4	47.4	48.7	44.6	53.6	30.4						
	85	54.4	54.4	54.5	54.5	58.6	44.5	50.6	50.6	50.6	50.6	53.8	42.0						
	90	57.7	57.7	57.8	57.8	59.1	56.0	53.7	53.7	53.8	53.8	54.4	54.0						
2400	75	48.9	48.9	53.2	36.8	58.5	20.6	45.1	45.1	48.7	34.8	53.7	18.6						
	80	52.3	52.3	53.7	49.4	58.8	33.9	48.5	48.5	49.3	47.4	54.0	32.0						
	85	55.7	55.7	55.8	55.8	59.1	46.6	51.7	51.7	51.8	51.8	54.3	44.6						
	90	59.1	59.1	59.2	59.2	59.7	59.6	54.9	54.9	55.0	55.0	55.1	55.1						

Notes:

1. All capacities shown are gross and have not considered indoor fan heat. To obtain NET cooling capacity subtract indoor fan heat. For indoor fan heat formula, refer to appropriate airflow table notes.
2. MBh = Total gross capacity
3. SHC = Sensible heat capacity

Table 37. Gross cooling capacities — 6 tons standard efficiency, dual fuel

CFM	Ent DB (° F)	Entering Wet Bulb Temp (°F)						Entering Wet Bulb Temp (°F)						Entering Wet Bulb Temp (°F)					
		61		67		73		61		67		73		61		67		73	
		MBh	SHC	MBh	SHC	MBh	SHC	MBh	SHC	MBh	SHC	MBh	SHC	MBh	SHC	MBh	SHC	MBh	SHC
		Ambient Temperature 85°F						Ambient Temperature 95°F						Ambient Temperature 105°F					
1800	75	77.3	59.1	76.2	42.2	84.9	30.1	65.1	52.1	72.9	40.5	81.1	28.4	61.8	50.2	69.2	38.7	76.9	26.5
	80	68.6	63.5	76.5	52.1	85.3	40.1	65.7	61.8	73.2	50.4	81.5	38.4	62.5	59.9	69.5	48.6	78.0	36.8
	85	70.7	70.7	76.8	62.0	85.5	50.0	68.2	68.2	73.5	60.1	81.8	48.3	65.4	65.4	69.9	58.2	77.7	46.5
	90	74.8	74.8	77.3	71.5	85.8	59.9	72.2	72.2	74.1	69.8	82.1	58.2	69.3	69.3	70.5	68.0	78.0	56.4
2160	75	71.0	59.6	79.0	45.8	87.5	31.2	67.9	57.8	75.5	44.1	83.5	29.4	64.4	55.9	71.6	42.2	79.1	27.6
	80	72.0	71.4	79.4	57.7	88.1	43.2	68.9	68.9	75.8	56.0	84.1	41.4	65.9	65.9	72.0	53.7	79.8	39.6
	85	76.1	76.1	80.0	69.1	88.4	55.1	73.3	73.3	76.5	67.3	84.5	53.4	70.1	70.1	72.7	65.4	80.1	51.5
	90	80.6	80.6	81.0	80.9	88.8	66.7	77.7	77.7	77.8	77.8	84.9	64.9	74.4	74.4	74.6	74.6	81.1	63.2

Table 37. Gross cooling capacities — 6 tons standard efficiency, dual fuel (continued)

CFM	Ent DB (° F)	Entering Wet Bulb Temp (°F)						Entering Wet Bulb Temp (°F)						Entering Wet Bulb Temp (°F)					
		61		67		73		61		67		73		61		67		73	
		MBh	SHC	MBh	SHC	MBh	SHC	MBh	SHC	MBh	SHC	MBh	SHC	MBh	SHC	MBh	SHC	MBh	SHC
2400	75	72.6	63.4	80.4	48.1	88.9	31.9	69.3	61.6	76.7	46.3	85.4	30.3	65.7	59.6	72.7	44.5	80.2	28.2
	80	74.4	74.4	80.9	60.9	89.6	45.2	71.5	71.5	77.3	59.1	85.4	43.4	68.3	68.3	73.3	57.1	80.9	41.5
	85	79.1	79.1	81.7	73.9	89.9	58.4	76.1	76.1	78.1	72.1	85.8	56.7	72.8	72.8	74.2	70.1	81.4	54.8
	90	83.8	83.8	84.0	84.0	90.6	71.2	80.7	80.7	80.8	80.8	86.5	69.3	77.2	77.2	77.4	77.4	82.5	67.5
2640	75	73.9	67.1	81.6	50.4	90.0	32.5	70.6	65.3	77.8	48.6	86.3	30.9	67.0	63.3	73.7	46.7	81.1	28.8
	80	76.8	76.8	82.2	64.3	90.7	47.1	73.8	73.8	78.5	62.4	86.5	45.4	70.5	70.5	74.4	60.4	81.9	43.5
	85	81.7	81.7	83.2	78.7	91.3	61.8	78.5	78.5	79.5	76.8	87.0	59.4	75.1	75.1	75.6	74.8	82.9	57.6
	90	86.6	86.6	86.8	86.8	91.9	75.6	83.3	83.3	83.5	83.5	87.8	73.7	79.7	79.7	79.8	79.8	83.6	71.9
2880	75	75.2	70.8	82.6	52.6	90.9	33.1	71.8	68.9	78.7	50.8	86.5	31.3	68.1	66.9	74.5	48.2	81.7	29.4
	80	79.0	79.0	83.4	67.7	91.8	49.1	75.8	75.8	79.6	65.8	87.4	47.3	72.3	72.3	75.4	63.7	82.7	45.4
	85	84.0	84.0	84.7	83.4	92.8	64.5	80.7	80.7	80.9	80.9	88.0	62.4	77.1	77.1	77.2	77.2	83.4	60.4
	90	89.1	89.1	89.3	89.3	93.2	80.0	85.7	85.7	85.8	85.8	89.3	78.2	81.9	81.9	82.0	82.0	84.7	76.2
		Ambient Temperature 115°F						Ambient Temperature 125°F											
1800	75	58.2	48.2	65.2	36.8	73.1	24.9	54.3	46.0	60.8	34.7	67.5	22.5						
	80	58.9	58.0	65.5	46.7	73.4	34.8	55.1	55.1	61.1	44.6	68.1	32.5						
	85	62.3	62.3	66.0	56.2	73.2	44.5	58.8	58.8	61.6	54.0	68.4	42.5						
	90	66.1	66.1	66.7	66.0	73.6	54.5	62.5	62.5	62.7	62.7	68.7	52.1						
2160	75	60.6	53.8	67.3	40.2	74.4	25.6	56.4	51.6	62.6	38.1	69.7	23.7						
	80	62.6	62.6	67.8	51.7	75.0	37.6	58.9	58.9	63.2	49.4	69.9	35.5						
	85	66.7	66.7	68.5	63.3	75.4	49.5	62.9	62.9	63.9	61.1	70.3	47.0						
	90	70.8	70.8	71.0	71.0	76.0	60.9	66.9	66.9	67.0	67.0	71.2	58.8						
2400	75	61.8	57.5	68.3	42.5	75.3	26.2	57.6	55.2	63.5	39.8	70.0	24.1						
	80	64.8	64.8	69.0	55.0	76.1	39.5	61.0	61.0	64.3	52.7	70.8	37.4						
	85	69.1	69.1	69.9	68.0	76.6	52.3	65.1	65.1	65.2	65.2	71.3	50.0						
	90	73.4	73.4	73.6	73.6	77.2	65.3	69.3	69.3	69.4	69.4	72.4	63.1						
2640	75	63.0	61.1	69.1	44.1	76.0	26.8	58.6	58.6	64.3	41.7	71.1	24.9						
	80	66.8	66.8	70.0	58.3	76.9	41.5	62.8	62.8	65.2	56.0	71.5	39.3						
	85	71.2	71.2	71.4	71.4	77.5	55.3	67.0	67.0	67.1	67.1	72.2	53.0						
	90	75.7	75.7	75.8	75.8	78.4	69.6	71.3	71.3	71.7	71.7	73.1	67.3						
2880	75	64.0	64.0	69.9	46.0	76.5	27.4	60.0	60.0	65.0	43.6	70.9	25.2						
	80	68.5	68.5	70.9	61.6	77.6	43.4	64.3	64.3	66.0	59.2	72.5	40.4						
	85	73.1	73.1	73.2	73.2	78.4	58.2	68.7	68.7	68.8	68.8	73.0	55.9						
	90	77.7	77.7	77.8	77.8	79.4	73.9	73.3	73.3	73.2	73.2	74.0	71.6						

Notes:

1. All capacities shown are gross and have not considered indoor fan heat. To obtain NET cooling capacity subtract indoor fan heat. For indoor fan heat formula, refer to appropriate airflow table notes.
2. MBh = Total gross capacity
3. SHC = Sensible heat capacity

Table 38. Gross cooling capacities — 7.5 tons standard efficiency, dual fuel

CFM	Ent DB (° F)	Entering Wet Bulb Temp (°F)						Entering Wet Bulb Temp (°F)						Entering Wet Bulb Temp (°F)					
		61		67		73		61		67		73		61		67		73	
		MBh	SHC	MBh	SHC	MBh	SHC	MBh	SHC	MBh	SHC	MBh	SHC	MBh	SHC	MBh	SHC	MBh	SHC
		Ambient Temperature 85°F						Ambient Temperature 95°F						Ambient Temperature 105°F					
2250	75	89.8	71.4	89.2	50.1	99.7	34.9	75.9	62.7	85.2	48.0	95.3	32.9	71.9	60.5	80.9	45.8	90.5	30.7
	80	80.2	76.8	89.3	62.4	99.8	47.4	76.8	74.8	85.4	60.4	95.5	45.4	72.9	72.6	81.1	58.2	90.8	43.2
	85	83.6	83.6	89.7	74.8	100.0	59.8	80.6	80.6	85.8	72.5	95.7	57.8	77.1	77.1	81.6	70.3	91.0	55.6
	90	88.5	88.5	90.5	86.9	100.2	72.2	85.4	85.4	86.7	84.9	95.9	70.2	81.9	81.9	82.6	82.6	91.2	68.1
2700	75	82.6	71.9	92.2	54.5	102.7	36.2	78.9	69.8	88.0	52.4	98.0	34.1	74.7	67.4	83.5	50.1	93.1	31.9
	80	84.3	84.3	92.4	69.3	102.9	51.2	81.1	81.1	88.3	67.2	98.3	49.1	77.4	77.4	83.8	65.0	93.4	46.9
	85	89.6	89.6	93.2	83.8	103.1	66.2	86.2	86.2	89.1	81.7	98.6	64.1	82.6	82.6	84.7	79.4	93.6	61.9
	90	95.0	95.0	95.2	95.2	103.5	81.1	91.6	91.6	91.7	91.7	99.0	79.0	87.8	87.8	87.9	87.9	94.1	76.4
3000	75	84.3	76.6	93.7	57.3	104.2	37.1	80.6	74.5	89.4	55.2	99.4	34.9	76.3	72.2	84.8	53.0	94.3	32.7
	80	87.4	87.4	94.1	73.9	104.5	53.7	84.0	84.0	89.8	71.4	99.8	51.6	80.2	80.2	85.3	69.1	94.7	49.4
	85	93.0	93.0	95.1	89.9	104.7	70.3	89.4	89.4	91.0	87.7	100.0	68.2	85.6	85.6	86.5	85.5	95.0	66.0
	90	98.7	98.7	98.8	98.8	105.3	86.4	95.0	95.0	95.2	95.2	100.5	84.2	91.0	91.0	91.2	91.2	95.7	82.0

Table 38. Gross cooling capacities — 7.5 tons standard efficiency, dual fuel (continued)

CFM	Ent DB (° F)	Entering Wet Bulb Temp (°F)						Entering Wet Bulb Temp (°F)						Entering Wet Bulb Temp (°F)					
		61		67		73		61		67		73		61		67		73	
		MBh	SHC	MBh	SHC	MBh	SHC	MBh	SHC	MBh	SHC	MBh	SHC	MBh	SHC	MBh	SHC	MBh	SHC
3300	75	85.9	81.4	95.0	60.1	105.5	37.8	82.0	79.2	90.6	58.0	100.6	35.7	77.8	76.9	85.9	55.7	95.4	33.5
	80	90.1	90.1	95.5	77.8	105.8	56.2	86.5	86.5	91.2	75.6	100.9	54.0	82.6	82.6	86.5	73.3	95.8	51.8
	85	95.9	95.9	96.9	95.9	106.1	74.4	92.2	92.2	92.7	92.7	101.2	72.3	88.2	88.2	88.3	88.3	96.2	70.1
	90	101.8	101.8	102.0	102.0	106.9	92.1	98.0	98.0	98.1	98.1	102.1	89.9	93.8	93.8	94.0	94.0	97.1	87.6
3600	75	87.3	86.1	96.1	62.9	106.5	38.6	83.4	83.4	91.6	60.7	101.4	36.4	79.1	79.1	86.8	58.5	96.3	34.2
	80	92.5	92.5	96.8	82.1	106.9	58.6	88.8	88.8	92.4	79.9	101.9	56.4	84.7	84.7	87.7	77.6	96.8	54.2
	85	98.5	98.5	98.7	98.7	107.3	78.5	94.7	94.7	94.8	94.8	102.3	76.3	90.5	90.5	90.6	90.6	97.2	74.2
	90	104.6	104.6	104.8	104.8	108.3	97.6	100.6	100.6	100.6	100.6	103.4	95.4	96.3	96.3	96.4	96.4	98.4	93.2
		Ambient Temperature 115°F						Ambient Temperature 125°F											
2250	75	67.8	57.9	76.4	43.6	85.6	28.4	63.4	55.5	71.5	41.2	80.3	26.1						
	80	68.9	68.9	76.6	55.9	85.8	40.9	65.1	65.1	71.8	53.6	80.5	38.6						
	85	73.5	73.5	77.1	68.0	86.0	53.4	69.7	69.7	72.4	65.6	80.8	51.0						
	90	78.2	78.2	78.4	78.4	86.3	65.8	74.3	74.3	74.4	74.4	81.1	63.5						
2700	75	70.5	65.1	78.7	47.8	87.9	29.7	65.9	62.6	73.7	45.4	82.3	27.3						
	80	73.6	73.6	79.1	62.4	88.2	44.7	69.6	69.6	74.1	59.9	82.7	42.3						
	85	78.7	78.7	80.1	77.1	88.5	59.6	74.5	74.5	75.2	74.7	83.0	57.2						
	90	83.7	83.7	83.9	83.9	89.0	74.1	79.4	79.4	79.6	79.6	83.6	71.6						
3000	75	72.0	69.8	79.9	50.6	89.0	30.4	67.4	67.3	74.8	48.2	83.4	28.0						
	80	76.2	76.2	80.5	66.7	89.4	47.1	72.0	72.0	75.4	64.2	83.8	44.7						
	85	81.5	81.5	81.9	81.9	89.8	63.7	77.1	77.1	77.2	77.2	84.2	61.3						
	90	86.8	86.8	86.9	86.9	90.5	79.7	82.2	82.2	82.4	82.4	85.0	77.2						
3300	75	73.4	73.4	80.9	53.4	90.0	31.2	68.9	68.9	75.7	50.9	84.2	28.8						
	80	78.5	78.5	81.7	70.9	90.5	49.5	74.1	74.1	76.5	68.4	84.7	47.1						
	85	83.9	83.9	84.1	84.1	90.8	67.8	79.4	79.4	79.5	79.5	85.2	64.7						
	90	89.4	89.4	89.5	89.5	91.9	85.2	84.7	84.7	84.8	84.8	86.3	82.7						
3600	75	75.0	75.0	81.8	56.1	90.8	31.9	70.6	70.6	76.4	53.7	84.9	29.5						
	80	80.5	80.5	82.7	75.2	91.3	51.9	75.9	75.9	77.5	72.6	85.5	49.5						
	85	86.1	86.1	86.2	86.2	91.8	71.1	81.3	81.3	81.5	81.5	86.1	68.6						
	90	91.7	91.7	91.8	91.8	93.1	90.8	86.8	86.8	86.9	86.9	87.5	87.5						

Notes:

1. All capacities shown are gross and have not considered indoor fan heat. To obtain NET cooling capacity subtract indoor fan heat. For indoor fan heat formula, refer to appropriate airflow table notes.
2. MBh = Total gross capacity
3. SHC = Sensible heat capacity

Table 39. Gross cooling capacities — 8.5 tons standard efficiency, dual fuel

CFM	Ent DB (° F)	Entering Wet Bulb Temp (°F)						Entering Wet Bulb Temp (°F)						Entering Wet Bulb Temp (°F)					
		61		67		73		61		67		73		61		67		73	
		MBh	SHC	MBh	SHC	MBh	SHC	MBh	SHC	MBh	SHC	MBh	SHC	MBh	SHC	MBh	SHC	MBh	SHC
		Ambient Temperature 85°F						Ambient Temperature 95°F						Ambient Temperature 105°F					
2550	75	108.3	84.4	107.8	60.4	119.6	42.8	92.4	75.0	102.8	58.0	113.9	40.4	87.7	72.3	97.5	55.5	108.0	38.0
	80	97.7	91.1	108.0	74.4	119.8	57.0	93.3	88.7	103.1	72.1	114.2	54.6	88.7	86.2	97.8	69.6	108.3	52.2
	85	100.9	100.9	108.5	88.6	120.1	71.1	97.1	97.1	103.6	85.9	114.5	68.8	93.0	93.0	98.4	83.4	108.6	66.3
	90	106.5	106.5	109.3	102.3	120.4	85.3	102.6	102.6	104.5	99.9	114.9	82.9	98.4	98.4	99.4	97.4	109.0	80.5
3060	75	100.7	85.5	111.4	65.3	123.2	44.3	95.9	83.0	106.0	62.9	117.1	41.8	91.0	80.4	100.5	60.4	110.9	39.3
	80	102.2	102.2	111.8	82.3	123.6	61.3	97.9	97.9	106.5	79.8	117.6	58.9	93.6	93.6	101.0	77.3	111.4	56.4
	85	108.0	108.0	112.6	98.7	123.9	78.3	103.8	103.8	107.4	96.2	118.0	75.9	99.3	99.3	102.0	93.6	111.8	73.4
	90	114.1	114.1	114.4	114.4	124.5	95.3	109.7	109.7	110.0	110.0	118.6	92.9	105.0	105.0	105.3	105.3	112.5	89.9
3400	75	102.7	90.8	113.2	68.5	125.0	45.2	97.9	88.3	107.7	66.1	118.8	42.7	92.8	85.7	102.0	63.5	112.3	40.2
	80	105.7	105.7	113.8	87.4	125.5	64.1	101.4	101.4	108.3	84.4	119.3	61.7	96.8	96.8	102.7	81.8	112.9	59.1
	85	112.0	112.0	114.9	105.5	125.9	83.0	107.5	107.5	109.6	103.0	119.8	80.6	102.7	102.7	104.0	100.4	113.4	78.0
	90	118.4	118.4	118.6	118.6	126.7	101.4	113.7	113.7	113.9	113.9	120.6	98.8	108.7	108.7	108.9	108.9	114.3	96.2
3740	75	104.5	96.1	114.7	71.7	126.5	46.0	99.6	93.6	109.1	69.2	120.1	43.6	94.4	90.9	103.2	66.7	113.5	41.0
	80	108.9	108.9	115.5	91.8	127.1	66.9	104.3	104.3	109.9	89.2	120.7	64.4	99.6	99.6	104.2	86.6	114.2	61.9
	85	115.4	115.4	117.0	112.3	127.6	87.7	110.7	110.7	111.6	109.8	121.3	85.2	105.7	105.7	106.0	106.0	114.8	82.7
	90	122.2	122.1	122.4	122.4	128.6	107.7	117.2	117.2	117.4	117.4	122.4	105.1	112.0	112.0	112.2	112.2	116.0	102.5

Table 39. Gross cooling capacities — 8.5 tons standard efficiency, dual fuel (continued)

CFM	Ent DB (° F)	Entering Wet Bulb Temp (°F)						Entering Wet Bulb Temp (°F)						Entering Wet Bulb Temp (°F)					
		61		67		73		61		67		73		61		67		73	
		MBh	SHC	MBh	SHC	MBh	SHC	MBh	SHC	MBh	SHC	MBh	SHC	MBh	SHC	MBh	SHC	MBh	SHC
4080	75	106.2	101.4	116.0	74.8	127.7	46.9	101.2	98.8	110.3	72.3	121.2	44.4	95.9	95.9	104.3	69.8	114.5	41.8
	80	111.7	111.7	117.0	96.6	128.4	69.6	107.0	107.0	111.3	94.0	121.9	67.1	102.0	102.0	105.4	91.3	115.3	64.6
	85	118.5	118.5	119.0	119.0	129.0	92.3	113.5	113.5	113.7	113.7	122.6	89.1	108.3	108.3	108.5	108.5	116.0	86.4
	90	125.5	125.5	125.7	125.7	130.3	114.0	120.3	120.3	120.5	120.5	124.0	111.4	114.8	114.8	115.0	115.0	117.5	108.7
		Ambient Temperature 115°F						Ambient Temperature 125°F											
2550	75	82.7	69.7	91.9	53.0	101.8	35.4	77.4	66.9	86.1	50.3	95.2	32.8						
	80	83.8	83.6	92.3	67.1	102.2	49.6	79.1	79.1	86.4	64.4	95.7	47.0						
	85	88.7	88.7	92.9	80.8	102.5	63.8	84.0	84.0	87.1	78.0	96.0	61.2						
	90	93.9	93.9	94.1	94.1	102.9	77.9	89.0	89.0	89.2	89.2	96.5	75.3						
3060	75	85.8	77.7	94.6	57.8	104.3	36.8	80.2	74.8	88.4	55.1	97.5	34.1						
	80	89.0	89.0	95.2	74.3	104.9	53.8	84.0	84.0	89.1	71.4	98.0	51.2						
	85	94.5	94.5	96.3	91.0	105.3	70.8	89.4	89.4	90.2	88.1	98.5	68.2						
	90	100.1	100.1	100.3	100.3	106.0	87.2	94.7	94.7	94.9	94.9	99.3	84.4						
3400	75	87.4	82.9	96.0	60.9	105.6	37.6	81.8	80.1	89.6	58.2	98.6	34.9						
	80	91.9	91.9	96.8	79.1	106.3	56.6	86.7	86.7	90.5	76.2	99.2	53.9						
	85	97.7	97.7	98.2	97.7	106.8	75.5	92.2	92.2	92.4	92.4	99.8	72.1						
	90	103.4	103.4	103.6	103.6	107.8	93.5	97.8	97.8	98.0	98.0	100.8	90.6						
3740	75	89.0	88.2	97.1	64.0	106.7	38.4	83.4	83.4	90.6	61.3	99.5	35.7						
	80	94.5	94.5	98.1	83.8	107.4	59.3	89.1	89.1	91.7	80.9	100.2	56.6						
	85	100.4	100.4	100.6	100.6	108.1	79.3	94.7	94.7	94.9	94.9	101.0	76.4						
	90	106.4	106.4	106.6	106.6	109.3	99.7	100.5	100.5	100.7	100.7	102.3	96.9						
4080	75	90.6	90.6	98.1	67.1	107.5	39.2	85.3	85.3	91.5	63.4	100.2	36.5						
	80	96.7	96.7	99.3	88.5	108.3	62.0	91.1	91.1	92.8	85.6	101.0	59.2						
	85	102.8	102.8	102.9	102.9	109.2	83.6	96.9	96.9	97.0	97.0	102.0	80.7						
	90	109.0	109.0	109.2	109.2	110.7	105.9	102.9	102.9	103.1	103.1	103.6	103.0						

Notes:

1. All capacities shown are gross and have not considered indoor fan heat. To obtain NET cooling capacity subtract indoor fan heat. For indoor fan heat formula, refer to appropriate airflow table notes.
2. MBh = Total gross capacity
3. SHC = Sensible heat capacity

Table 40. Gross cooling capacities — 10 tons standard efficiency, dual fuel

CFM	Ent DB (° F)	Entering Wet Bulb Temp (°F)						Entering Wet Bulb Temp (°F)						Entering Wet Bulb Temp (°F)					
		61		67		73		61		67		73		61		67		73	
		MBh	SHC	MBh	SHC	MBh	SHC	MBh	SHC	MBh	SHC	MBh	SHC	MBh	SHC	MBh	SHC	MBh	SHC
		Ambient Temperature 85°F						Ambient Temperature 95°F						Ambient Temperature 105°F					
3000	75	107.6	87.6	120.0	67.9	133.0	47.5	102.6	84.8	114.5	65.2	126.6	44.7	97.3	82.0	108.6	62.3	119.9	41.9
	80	108.3	102.7	120.6	84.4	133.8	64.2	103.4	99.9	115.0	81.7	127.6	61.5	98.2	97.0	109.1	78.8	121.0	58.6
	85	111.2	111.2	120.9	100.8	134.4	80.8	107.0	107.0	115.4	98.1	128.3	78.1	102.5	102.5	109.5	94.0	121.8	75.3
	90	117.6	117.6	121.6	115.8	134.9	97.3	113.2	113.2	116.3	113.0	128.7	94.6	108.6	108.6	110.6	110.1	122.3	91.8
3600	75	111.5	96.0	124.0	73.7	136.6	49.2	106.2	93.1	118.1	70.9	129.9	46.4	100.7	90.0	111.9	68.0	122.8	43.5
	80	113.0	113.0	124.7	93.5	137.9	69.2	108.0	108.0	118.8	90.7	131.4	66.5	102.8	102.8	112.6	87.8	124.5	63.6
	85	119.0	119.0	125.2	111.5	138.7	89.2	114.3	114.3	119.5	108.6	132.2	86.4	109.4	109.4	113.4	105.6	125.3	83.5
	90	125.9	125.9	126.9	126.9	139.2	108.9	121.0	121.0	121.4	121.4	132.7	106.2	115.9	115.9	116.1	116.1	125.9	103.3
4000	75	113.7	102.1	126.1	77.5	138.5	50.2	108.3	99.1	120.1	74.7	131.6	47.4	102.6	95.9	113.6	71.8	124.3	44.5
	80	116.1	116.1	126.8	99.5	140.1	72.5	111.4	111.4	120.8	96.7	133.3	69.8	106.4	106.4	114.4	93.8	126.2	66.9
	85	123.3	123.3	127.6	119.3	140.9	94.7	118.4	118.4	121.7	116.3	134.2	91.9	113.1	113.1	115.6	113.2	127.1	89.0
	90	130.5	130.5	130.5	130.5	141.4	116.6	125.4	125.4	125.6	125.6	134.7	111.7	120.0	120.0	120.2	120.2	127.7	108.6
4400	75	115.6	108.1	127.9	81.2	140.0	51.2	110.1	105.0	121.7	78.4	132.9	48.4	104.3	101.8	115.1	75.4	125.5	45.4
	80	119.6	119.6	128.6	105.4	141.9	75.8	114.7	114.7	122.4	100.3	135.0	73.0	109.4	109.4	115.9	97.1	127.7	70.1
	85	127.0	127.0	129.8	127.0	142.8	100.1	121.9	121.9	123.8	123.8	135.9	97.3	116.4	116.4	117.5	117.5	128.7	94.4
	90	134.5	134.5	134.7	134.7	143.3	121.9	129.2	129.2	129.4	129.4	136.5	118.8	123.5	123.5	123.7	123.7	129.5	115.7
4800	75	117.3	114.0	129.4	84.9	141.3	52.2	111.7	110.9	123.0	82.0	134.1	49.3	105.8	105.8	116.3	79.1	126.4	46.4
	80	122.7	122.7	130.1	108.8	143.4	79.0	117.5	117.5	123.8	105.7	136.4	76.2	112.1	112.1	117.2	102.4	128.9	73.3
	85	130.3	130.3	131.8	131.8	144.3	105.5	125.0	125.0	125.8	125.8	137.3	102.7	119.3	119.3	119.5	119.5	130.0	99.8
	90	138.1	138.1	138.2	138.2	145.0	129.0	132.5	132.5	132.7	132.7	138.2	125.9	126.6	126.6	126.7	126.7	131.0	122.7
		Ambient Temperature 115°F						Ambient Temperature 125°F											

Table 40. Gross cooling capacities — 10 tons standard efficiency, dual fuel (continued)

CFM	Ent DB (° F)	Entering Wet Bulb Temp (°F)						Entering Wet Bulb Temp (°F)						Entering Wet Bulb Temp (°F)					
		61		67		73		61		67		73		61		67		73	
		MBh	SHC	MBh	SHC	MBh	SHC	MBh	SHC	MBh	SHC	MBh	SHC	MBh	SHC	MBh	SHC	MBh	SHC
3000	75	91.6	77.8	102.3	59.4	112.8	38.9	85.7	74.5	95.7	56.3	105.3	35.9						
	80	92.8	92.8	102.9	75.9	114.1	55.7	87.0	87.0	96.3	72.8	106.8	52.7						
	85	97.7	97.7	103.4	90.8	114.9	72.3	92.5	92.5	96.9	87.6	107.6	69.3						
	90	103.6	103.6	104.7	104.7	115.4	88.8	98.2	98.2	98.4	98.4	108.1	85.8						
3600	75	94.8	86.8	105.3	65.0	115.4	40.5	88.6	83.4	98.4	61.9	107.5	37.4						
	80	97.8	97.8	106.0	84.8	117.2	60.6	92.3	92.3	99.1	79.7	109.5	57.6						
	85	104.1	104.1	107.0	102.3	118.1	80.6	98.4	98.4	100.3	99.0	110.4	77.5						
	90	110.4	110.4	110.6	110.6	118.6	98.3	104.5	104.5	104.7	104.7	111.1	94.9						
4000	75	96.6	92.7	106.9	68.7	116.7	41.5	90.3	89.2	99.7	65.6	108.5	38.3						
	80	101.0	101.0	107.6	88.4	118.8	63.9	95.2	95.2	100.6	84.9	110.9	60.8						
	85	107.6	107.6	109.0	109.0	119.7	86.0	101.6	101.6	102.2	102.2	111.9	82.9						
	90	114.2	114.2	114.4	114.4	120.4	105.3	108.0	108.0	108.1	108.1	112.7	101.9						
4400	75	98.2	98.2	108.2	72.4	117.7	42.4	91.8	91.8	100.8	69.2	109.3	39.2						
	80	103.8	103.8	109.1	93.7	120.1	67.1	97.8	97.8	101.9	90.2	112.0	63.9						
	85	110.6	110.6	111.0	111.0	121.1	91.4	104.3	104.3	104.3	104.3	113.1	88.3						
	90	117.5	117.5	117.6	117.6	122.0	112.3	111.0	111.0	111.1	111.1	114.2	108.8						
4800	75	99.7	99.7	109.2	76.0	118.4	43.3	93.3	93.3	101.8	72.8	109.9	40.1						
	80	106.2	106.2	110.3	99.0	121.2	70.2	100.0	100.0	103.0	95.4	113.0	67.1						
	85	113.2	113.2	113.4	113.4	122.3	96.8	106.8	106.8	106.9	106.9	114.2	89.8						
	90	120.3	120.3	120.4	120.4	123.5	119.3	113.6	113.6	113.7	113.7	115.6	115.6						

Notes:

1. All capacities shown are gross and have not considered indoor fan heat. To obtain NET cooling capacity subtract indoor fan heat. For indoor fan heat formula, refer to appropriate airflow table notes.
2. MBh = Total gross capacity
3. SHC = Sensible heat capacity

Table 41. Gross cooling capacities — 12.5 tons standard efficiency, dual fuel

CFM	Ent DB (° F)	Entering Wet Bulb Temp (°F)						Entering Wet Bulb Temp (°F)						Entering Wet Bulb Temp (°F)					
		61		67		73		61		67		73		61		67		73	
		MBh	SHC	MBh	SHC	MBh	SHC	MBh	SHC	MBh	SHC	MBh	SHC	MBh	SHC	MBh	SHC	MBh	SHC
		Ambient Temperature 85°F						Ambient Temperature 95°F						Ambient Temperature 105°F					
3750	75	136.7	107.4	153.6	84.0	171.2	59.5	128.5	102.6	144.6	79.2	161.2	54.6	119.8	97.5	135.1	74.1	150.7	49.6
	80	137.2	126.7	154.0	103.9	171.5	79.6	129.2	121.8	145.1	99.1	161.7	74.7	120.7	116.7	135.6	94.0	151.3	69.7
	85	141.0	141.0	154.3	123.7	171.9	99.5	134.1	134.1	145.5	118.9	162.2	94.7	126.7	126.7	136.0	113.9	151.8	89.7
	90	149.4	149.4	154.9	143.0	172.2	119.4	144.4	144.4	146.2	138.1	162.6	114.6	134.7	134.7	137.0	133.0	152.2	109.6
4500	75	142.0	119.2	159.1	91.1	176.4	61.7	133.4	114.3	149.6	86.1	165.9	56.8	124.3	108.4	139.6	81.0	154.8	51.6
	80	143.5	142.3	159.6	114.8	177.0	85.7	135.3	135.3	150.1	109.9	166.7	80.7	127.4	127.4	140.2	104.7	155.8	75.6
	85	151.6	151.6	160.1	138.5	177.5	109.5	144.1	144.1	150.8	132.9	167.3	104.6	136.1	136.1	140.6	127.4	156.4	99.5
	90	160.8	160.8	161.8	161.5	177.9	133.2	153.1	153.1	153.4	153.4	167.7	128.3	144.8	144.8	144.6	144.6	156.9	123.3
5000	75	144.9	126.2	161.9	95.6	179.0	63.0	136.1	121.0	152.2	90.6	168.3	58.1	126.8	115.7	141.9	85.4	157.0	52.9
	80	148.1	148.1	162.4	121.9	179.9	89.5	140.5	140.5	152.8	116.9	169.3	84.6	132.2	132.2	142.5	111.7	158.1	79.4
	85	157.6	157.6	162.8	147.0	180.4	115.9	149.7	149.7	153.9	142.2	169.9	111.0	141.2	141.2	143.4	136.6	158.8	105.8
	90	167.2	167.2	167.0	167.0	180.8	142.1	159.0	159.0	159.3	159.3	170.4	137.2	150.3	150.3	150.1	150.1	159.4	132.1
5500	75	147.5	133.4	164.3	100.0	181.2	64.3	138.5	128.2	154.4	94.9	170.2	59.3	129.1	122.9	143.8	89.7	158.7	54.1
	80	153.0	153.0	164.8	128.7	182.2	93.3	144.9	144.9	155.0	123.7	171.4	88.3	136.4	136.4	144.6	118.5	160.0	83.2
	85	162.8	162.8	166.2	156.5	182.8	122.2	154.6	154.6	156.7	151.4	172.0	117.2	145.7	145.7	146.6	146.1	160.7	112.0
	90	172.8	172.8	172.5	172.5	183.4	151.0	164.3	164.3	164.5	164.5	172.8	146.0	155.2	155.2	154.8	154.8	161.6	139.7
6000	75	149.8	140.5	166.3	104.2	183.1	65.5	140.7	135.3	156.1	99.1	171.9	60.5	131.3	129.9	145.5	93.9	160.2	55.3
	80	157.2	157.2	166.9	135.5	184.2	97.0	148.9	148.9	156.9	130.4	173.2	92.0	140.1	140.1	146.3	123.9	161.6	86.8
	85	167.4	167.4	168.3	165.2	184.8	128.3	158.8	158.8	158.8	158.8	173.9	123.3	149.7	149.7	149.4	149.4	162.3	118.2
	90	177.7	177.7	177.3	177.3	185.6	158.5	168.9	168.9	168.5	168.5	174.9	153.3	159.4	159.4	159.0	159.0	163.6	148.0
		Ambient Temperature 115°F						Ambient Temperature 125°F											
3750	75	110.5	92.3	125.0	68.9	139.5	44.4	100.6	86.1	114.2	63.3	127.7	38.9						
	80	111.6	111.4	125.5	88.8	140.3	64.5	102.7	102.7	114.8	83.3	128.6	59.0						
	85	118.8	118.8	126.0	108.6	140.9	84.5	110.2	110.2	115.0	102.2	129.2	79.1						
	90	126.6	126.6	127.3	127.3	141.3	104.4	117.8	117.8	117.7	117.7	129.7	99.0						

Table 41. Gross cooling capacities — 12.5 tons standard efficiency, dual fuel (continued)

CFM	Ent DB (° F)	Entering Wet Bulb Temp (°F)						Entering Wet Bulb Temp (°F)						Entering Wet Bulb Temp (°F)					
		61		67		73		61		67		73		61		67		73	
		MBh	SHC	MBh	SHC	MBh	SHC	MBh	SHC	MBh	SHC	MBh	SHC	MBh	SHC	MBh	SHC	MBh	SHC
4500	75	114.7	102.9	129.0	75.6	143.2	46.3	104.5	97.1	117.7	70.0	130.9	40.8						
	80	119.0	119.0	129.6	99.4	144.3	70.3	110.0	110.0	118.4	93.8	132.1	64.8						
	85	127.4	127.4	130.2	121.9	145.0	94.2	118.1	118.1	119.3	116.2	132.8	88.7						
	90	135.9	135.9	136.1	136.1	145.5	118.0	126.3	126.3	126.1	126.1	133.5	111.5						
5000	75	117.0	110.2	131.1	80.0	145.1	47.6	106.7	104.3	119.5	74.4	138.3	44.6						
	80	123.4	123.4	131.7	106.3	146.3	74.1	114.0	114.0	120.3	99.5	133.9	68.6						
	85	132.2	132.2	132.9	131.2	147.0	100.5	122.5	122.5	122.3	122.3	134.6	95.0						
	90	141.0	141.0	140.7	140.7	147.8	125.7	131.0	131.0	130.7	130.7	135.6	120.0						
5500	75	119.2	117.3	132.8	84.2	147.3	48.9	108.9	108.9	121.0	78.6	133.8	43.2						
	80	127.3	127.3	133.6	111.9	148.0	77.8	117.5	117.5	122.1	106.0	135.4	72.3						
	85	136.3	136.3	136.5	136.5	148.7	106.7	126.2	126.2	126.4	126.4	136.1	101.2						
	90	145.5	145.5	145.1	145.1	149.9	134.1	135.0	135.0	134.6	134.6	137.5	128.4						
6000	75	121.4	121.4	134.2	88.4	147.9	49.9	111.7	111.7	122.3	82.7	134.8	44.3						
	80	130.6	130.6	134.8	117.9	149.5	81.4	120.5	120.5	123.6	112.3	136.6	75.9						
	85	139.9	139.9	139.6	139.6	150.2	112.8	129.5	129.5	129.7	129.7	137.4	105.7						
	90	149.4	149.4	148.9	148.9	151.7	142.4	138.6	138.6	138.8	138.8	139.4	136.6						

Notes:

1. All capacities shown are gross and have not considered indoor fan heat. To obtain NET cooling capacity subtract indoor fan heat. For indoor fan heat formula, refer to appropriate airflow table notes.
2. MBh = Total gross capacity
3. SHC = Sensible heat capacity

Table 42. Gross cooling capacities — 15 tons standard efficiency, dual fuel

CFM	Ent DB (° F)	Entering Wet Bulb Temp (°F)						Entering Wet Bulb Temp (°F)						Entering Wet Bulb Temp (°F)					
		61		67		73		61		67		73		61		67		73	
		MBh	SHC	MBh	SHC	MBh	SHC	MBh	SHC	MBh	SHC	MBh	SHC	MBh	SHC	MBh	SHC	MBh	SHC
		Ambient Temperature 85°F						Ambient Temperature 95°F						Ambient Temperature 105°F					
4500	75	165.6	131.5	185.1	103.1	205.6	73.1	156.7	126.6	175.4	98.3	194.8	68.9	147.2	121.5	165.1	93.2	183.3	63.9
	80	166.4	154.4	185.7	127.1	206.4	97.8	157.7	149.4	176.1	122.2	195.9	93.1	148.6	144.2	165.9	117.2	184.8	88.1
	85	171.5	171.5	186.2	150.9	207.1	121.8	164.1	164.1	176.7	146.1	196.7	117.1	156.2	156.2	166.5	141.1	185.7	112.2
	90	181.4	181.4	187.1	173.7	207.6	145.7	173.8	173.8	177.9	168.8	197.3	141.1	165.7	165.7	168.1	163.7	186.3	136.1
5400	75	171.7	145.4	191.3	111.4	211.3	76.1	162.4	140.4	181.1	106.5	200.0	71.3	152.5	133.8	170.3	101.3	188.0	66.2
	80	173.9	172.7	192.0	139.9	212.7	104.9	165.2	165.2	181.9	135.0	201.7	100.1	156.8	156.8	171.2	129.8	190.0	95.1
	85	183.7	183.7	192.9	168.3	213.6	133.5	175.7	175.7	182.9	162.1	202.7	128.8	167.0	167.0	172.4	156.8	191.1	123.8
	90	194.5	194.5	195.5	195.5	214.1	162.0	186.2	186.2	186.5	186.5	203.3	157.2	177.4	177.4	177.7	177.7	191.9	152.3
6000	75	175.0	153.0	194.5	116.6	214.2	77.6	165.5	147.8	184.0	111.7	202.6	72.7	155.5	142.3	173.0	106.5	188.8	67.1
	80	179.4	179.4	195.3	148.1	215.9	109.5	171.1	171.1	184.9	143.1	204.6	104.6	162.3	162.3	173.9	138.0	192.7	99.6
	85	190.5	190.5	196.6	178.0	216.9	141.1	182.1	182.1	186.5	172.9	205.7	136.3	173.0	173.0	175.9	167.6	193.8	131.3
	90	201.7	201.7	202.0	202.0	216.5	172.1	193.1	193.1	193.4	193.4	206.5	167.8	183.8	183.8	184.1	184.1	194.8	162.8
6600	75	178.0	161.4	197.1	121.7	216.6	79.0	168.4	156.1	186.5	116.7	204.8	74.1	158.2	150.6	175.2	111.5	192.3	69.1
	80	184.9	184.9	198.0	156.1	218.6	113.9	176.3	176.3	187.4	151.2	207.1	109.0	167.1	167.1	176.2	146.0	195.0	104.0
	85	196.4	196.4	200.0	188.7	218.5	148.0	187.6	187.6	189.8	183.6	208.2	143.6	178.2	178.2	179.2	178.2	196.1	138.6
	90	208.0	208.0	208.4	208.4	219.4	182.5	199.0	199.0	199.3	199.3	209.3	178.1	189.3	189.3	189.6	189.6	197.4	170.9
7200	75	180.7	169.6	199.4	126.7	218.7	80.4	171.0	164.3	188.5	121.6	206.6	75.5	160.8	158.7	177.0	116.4	193.9	70.4
	80	189.7	189.7	200.4	164.0	220.9	118.2	180.8	180.8	189.6	156.9	209.2	113.3	170.9	170.9	178.4	151.4	196.8	108.3
	85	201.6	201.6	203.2	199.2	220.8	155.2	192.5	192.5	193.1	193.1	210.3	150.8	182.7	182.7	182.8	182.8	198.0	145.8
	90	213.6	213.6	213.9	213.9	222.0	190.5	204.2	204.2	204.5	204.5	211.8	185.9	194.2	194.2	194.5	194.5	199.9	180.6
		Ambient Temperature 115°F						Ambient Temperature 125°F											
4500	75	137.2	116.1	154.2	88.0	171.3	58.7	126.4	109.3	142.6	82.5	158.4	53.3						
	80	138.9	138.8	155.0	111.9	173.0	83.0	129.5	129.5	143.5	106.5	160.5	77.7						
	85	147.7	147.7	155.8	135.8	174.0	107.1	138.6	138.6	144.4	129.0	161.5	101.8						
	90	157.1	157.1	157.8	157.8	174.7	131.1	147.8	147.8	148.1	148.1	162.3	125.8						
5400	75	142.1	128.1	158.9	96.0	175.4	61.0	131.1	122.2	146.8	90.4	162.0	55.5						
	80	147.8	147.8	159.9	124.5	177.8	90.0	138.1	138.1	147.8	119.0	164.7	84.6						
	85	157.8	157.8	161.4	151.2	178.9	118.6	148.0	148.0	149.8	145.5	165.9	113.3						
	90	168.0	168.0	168.3	168.3	179.7	147.2	157.8	157.8	158.1	158.1	166.9	140.0						

Table 42. Gross cooling capacities — 15 tons standard efficiency, dual fuel (continued)

CFM	Ent DB (° F)	Entering Wet Bulb Temp (°F)						Entering Wet Bulb Temp (°F)						Entering Wet Bulb Temp (°F)					
		61		67		73		61		67		73		61		67		73	
		MBh	SHC	MBh	SHC	MBh	SHC	MBh	SHC	MBh	SHC	MBh	SHC	MBh	SHC	MBh	SHC	MBh	SHC
6000	75	144.9	136.5	161.3	101.1	177.5	62.4	133.8	130.5	148.9	95.5	163.8	56.9						
	80	152.9	152.9	162.3	132.7	180.2	94.4	142.8	142.8	150.1	124.9	166.8	89.0						
	85	163.4	163.4	164.7	162.0	181.3	126.1	153.1	153.1	153.3	153.3	168.1	120.7						
	90	173.9	173.9	174.2	174.2	182.5	155.6	163.3	163.3	163.6	163.6	169.5	149.9						
6600	75	147.6	144.8	163.3	106.1	177.6	63.2	136.5	136.5	150.6	100.5	165.1	58.2						
	80	157.4	157.4	164.5	138.3	182.2	98.8	146.9	146.9	152.2	132.3	168.6	93.4						
	85	168.2	168.2	168.3	168.3	183.4	133.4	157.5	157.5	157.7	157.7	169.9	128.0						
	90	179.1	179.1	179.3	179.3	185.0	165.4	168.1	168.1	168.3	168.3	171.9	159.6						
7200	75	150.2	150.2	164.9	111.0	180.4	65.0	139.7	139.7	152.0	105.3	166.0	59.5						
	80	161.3	161.3	166.6	145.6	183.8	103.0	150.5	150.5	154.1	139.5	170.0	97.6						
	85	172.4	172.4	172.6	172.6	185.2	140.6	161.3	161.3	161.5	161.5	171.5	135.1						
	90	183.6	183.6	183.8	183.8	187.4	175.0	172.2	172.2	171.7	171.7	174.2	169.2						

Notes:

1. All capacities shown are gross and have not considered indoor fan heat. To obtain NET cooling capacity subtract indoor fan heat. For indoor fan heat formula, refer to appropriate airflow table notes.
2. MBh = Total gross capacity
3. SHC = Sensible heat capacity

Table 43. Gross cooling capacities — 17.5 tons standard efficiency, dual fuel

CFM	Ent DB (° F)	Entering Wet Bulb Temp (°F)						Entering Wet Bulb Temp (°F)						Entering Wet Bulb Temp (°F)					
		61		67		73		61		67		73		61		67		73	
		MBh	SHC	MBh	SHC	MBh	SHC	MBh	SHC	MBh	SHC	MBh	SHC	MBh	SHC	MBh	SHC	MBh	SHC
		Ambient Temperature 85°F						Ambient Temperature 95°F						Ambient Temperature 105°F					
5250	75	190.0	151.5	210.9	118.3	232.1	83.7	180.3	146.3	200.3	113.0	220.1	78.5	170.3	140.8	189.3	107.7	206.0	72.0
	80	191.2	177.4	211.9	145.9	234.1	111.7	181.9	172.0	201.5	140.7	222.5	106.6	172.2	166.4	190.5	135.3	208.7	100.6
	85	197.2	197.2	212.7	173.3	235.3	139.5	189.1	189.1	202.3	168.2	222.0	133.6	180.5	180.5	190.2	162.3	210.1	128.4
	90	208.2	208.2	214.1	199.2	236.2	167.0	199.9	199.9	204.1	193.8	222.9	161.2	191.1	191.1	192.4	187.7	211.0	155.9
6300	75	196.6	167.2	217.5	127.5	238.1	86.4	186.4	159.6	206.4	122.2	223.6	80.4	176.0	153.8	194.8	116.7	210.6	75.1
	80	199.6	197.8	218.7	160.3	240.9	119.7	190.1	190.1	207.6	155.0	226.7	113.7	180.9	180.9	196.1	149.6	214.1	108.4
	85	210.4	210.4	219.9	190.9	242.3	152.7	201.5	201.5	209.1	185.3	228.2	146.7	192.2	192.2	196.5	178.9	215.6	141.3
	90	222.4	222.4	223.5	223.5	241.0	184.5	213.2	213.2	213.5	213.5	229.1	179.4	202.3	202.3	202.6	202.6	216.7	174.1
7000	75	200.1	174.8	221.0	133.4	239.0	87.3	189.9	169.0	209.5	128.0	226.2	82.0	179.3	163.0	197.6	122.5	212.8	76.6
	80	205.3	205.3	222.2	169.5	242.2	124.0	196.3	196.3	210.8	164.2	229.8	118.8	186.8	186.8	199.0	158.7	216.8	113.4
	85	217.7	217.7	224.1	203.0	243.6	160.3	208.4	208.4	213.1	197.4	231.3	155.1	198.5	198.5	200.2	190.8	218.4	149.7
	90	228.7	228.7	230.6	230.6	244.6	196.4	219.1	219.1	220.9	220.9	232.5	191.3	208.9	208.9	209.2	209.2	219.7	182.7
7700	75	203.5	184.0	223.8	139.1	241.4	88.9	193.0	178.1	212.1	133.7	228.3	83.5	182.2	172.0	199.9	128.1	214.5	77.9
	80	211.3	211.3	225.1	178.5	245.0	128.9	201.8	201.8	213.6	173.2	232.3	123.7	191.9	191.9	201.5	167.7	219.0	118.3
	85	224.0	224.0	227.9	214.8	246.5	168.5	214.3	214.3	216.8	209.1	233.9	163.3	204.0	204.0	203.7	202.4	220.8	157.9
	90	235.3	235.3	237.3	237.3	247.8	208.0	225.2	225.2	227.2	227.2	235.4	202.9	214.6	214.6	214.9	214.9	222.6	193.4
8400	75	206.5	193.0	226.2	144.6	243.3	90.3	195.9	187.0	214.2	139.2	229.9	85.0	185.0	180.8	201.8	133.6	215.8	79.5
	80	216.4	216.4	227.7	187.4	247.3	133.7	206.6	206.6	215.9	178.2	234.4	128.4	196.3	196.3	203.8	172.0	220.9	123.0
	85	229.6	229.6	231.5	226.4	248.9	176.6	219.4	219.4	220.3	220.3	236.1	171.3	208.8	208.8	207.4	207.4	222.7	165.9
	90	241.1	241.0	243.2	243.2	250.6	215.6	230.6	230.6	232.8	232.8	238.1	209.9	219.6	219.6	219.8	219.8	225.1	203.9
		Ambient Temperature 115°F						Ambient Temperature 125°F											
5250	75	159.9	135.3	177.9	102.2	194.7	67.7	148.9	127.2	165.8	96.5	181.2	62.1						
	80	162.2	160.6	179.1	129.8	197.9	95.9	152.0	152.0	167.1	124.1	184.7	90.3						
	85	171.5	171.5	180.1	155.3	199.4	123.7	161.9	161.9	168.3	149.2	186.3	118.1						
	90	181.8	181.8	182.8	182.6	200.4	151.3	171.9	171.9	172.2	172.2	185.6	145.0						
6300	75	165.2	147.7	182.8	111.1	198.9	70.2	154.0	141.3	170.1	105.4	192.4	67.3						
	80	171.3	171.3	184.1	144.0	202.9	103.7	161.2	161.2	171.6	138.2	189.0	98.0						
	85	182.3	182.3	186.3	173.6	204.6	136.7	171.8	171.8	174.1	167.4	190.9	131.0						
	90	192.1	192.1	193.7	193.7	205.8	169.5	181.3	181.3	182.9	182.9	192.2	160.4						
7000	75	168.3	156.8	185.2	116.9	200.7	71.7	156.8	150.3	172.2	111.0	194.1	68.7						
	80	176.8	176.8	186.7	149.7	205.4	108.7	166.2	166.2	174.0	143.2	191.2	103.0						
	85	188.2	188.2	189.9	185.4	207.2	145.0	177.2	177.2	177.8	177.8	193.2	139.4						
	90	198.2	198.2	200.0	200.0	208.8	177.6	188.4	188.4	188.6	188.6	195.1	171.3						

Table 43. Gross cooling capacities — 17.5 tons standard efficiency, dual fuel (continued)

CFM	Ent DB (° F)	Entering Wet Bulb Temp (°F)						Entering Wet Bulb Temp (°F)						Entering Wet Bulb Temp (°F)					
		61		67		73		61		67		73		61		67		73	
		MBh	SHC	MBh	SHC	MBh	SHC	MBh	SHC	MBh	SHC	MBh	SHC	MBh	SHC	MBh	SHC	MBh	SHC
7700	75	171.1	165.7	187.3	122.4	202.1	73.1	159.5	159.1	174.0	116.6	186.9	67.3						
	80	181.4	181.4	189.2	157.8	207.4	113.5	170.4	170.4	176.3	151.1	192.9	107.8						
	85	191.9	191.9	193.6	193.6	209.4	153.2	181.8	181.8	182.1	182.1	195.1	147.5						
	90	205.2	205.2	205.4	205.4	211.5	188.3	193.3	193.3	193.6	193.6	197.7	181.9						
8400	75	173.8	173.8	188.9	127.9	203.0	74.5	162.4	162.4	175.4	121.9	187.5	68.6						
	80	185.5	185.5	191.4	165.6	209.1	118.3	174.1	174.1	178.3	158.9	194.4	112.5						
	85	156.6	156.6	197.9	197.9	211.2	161.2	185.8	185.8	186.0	186.0	196.7	155.5						
	90	209.9	209.9	210.1	210.1	214.1	198.7	197.6	197.6	197.8	197.8	200.1	192.2						

Notes:

1. All capacities shown are gross and have not considered indoor fan heat. To obtain NET cooling capacity subtract indoor fan heat. For indoor fan heat formula, refer to appropriate airflow table notes.
2. MBh = Total gross capacity
3. SHC = Sensible heat capacity

Table 44. Gross cooling capacities — 20 tons standard efficiency, dual fuel

CFM	Ent DB (° F)	Entering Wet Bulb Temp (°F)						Entering Wet Bulb Temp (°F)						Entering Wet Bulb Temp (°F)					
		61		67		73		61		67		73		61		67		73	
		MBh	SHC	MBh	SHC	MBh	SHC	MBh	SHC	MBh	SHC	MBh	SHC	MBh	SHC	MBh	SHC	MBh	SHC
		Ambient Temperature 85°F						Ambient Temperature 95°F						Ambient Temperature 105°F					
6000	75	220.7	177.3	246.6	138.5	272.3	97.8	208.9	170.9	233.7	132.1	257.0	91.1	196.3	164.2	219.9	125.4	242.3	84.8
	80	222.5	208.5	247.7	171.2	274.4	130.9	211.1	201.9	234.9	164.9	260.4	124.7	198.9	195.0	221.1	158.2	245.3	118.1
	85	230.8	230.8	248.7	203.9	274.7	163.4	220.9	220.9	236.1	197.6	260.9	157.3	210.2	210.2	222.3	189.3	246.8	151.1
	90	244.3	244.3	250.0	234.7	276.5	196.5	234.2	234.2	238.4	228.6	262.8	190.4	223.2	223.2	225.3	221.8	247.9	183.9
7200	75	228.9	194.8	254.9	150.0	279.8	101.1	216.7	188.0	241.3	143.5	264.6	94.8	203.6	180.7	226.7	136.7	248.3	88.0
	80	233.2	233.2	256.2	189.1	282.8	140.8	222.2	222.2	242.7	182.6	268.1	134.5	210.7	210.7	228.2	175.8	252.2	127.8
	85	247.3	247.3	257.2	225.8	284.2	180.1	236.5	236.5	244.9	219.5	269.6	173.8	224.7	224.7	230.0	212.0	252.9	166.8
	90	262.1	262.1	262.0	262.0	285.4	219.2	251.0	251.0	250.8	250.8	271.0	213.0	238.9	238.9	238.6	238.6	255.3	206.4
8000	75	233.7	206.8	259.1	157.3	283.6	103.2	221.2	199.8	245.2	150.8	268.0	96.1	207.7	192.4	230.1	143.9	251.2	90.0
	80	241.2	241.2	259.8	200.2	287.1	147.2	230.1	230.1	246.8	194.1	271.9	140.8	218.1	218.1	231.8	184.4	255.6	134.1
	85	256.4	256.4	262.5	241.0	288.5	190.6	245.1	245.1	249.1	234.2	273.5	184.3	232.7	232.7	235.6	227.4	257.4	177.6
	90	270.3	270.3	271.6	271.6	290.1	234.0	258.7	258.7	259.9	259.9	275.3	227.8	245.9	245.9	247.1	247.1	259.4	218.0
8800	75	237.8	218.4	262.6	164.4	296.3	108.8	225.1	211.4	248.3	157.8	270.7	98.7	211.5	203.8	232.9	150.9	253.4	91.9
	80	248.5	248.5	263.5	211.6	290.6	153.3	237.0	237.0	250.2	202.3	275.1	147.0	224.5	224.5	235.3	194.8	258.5	140.2
	85	264.4	264.4	267.3	255.9	292.1	200.9	252.6	252.6	253.9	249.1	276.9	194.6	239.7	239.7	239.6	239.6	260.4	187.9
	90	278.6	278.6	280.0	280.0	294.3	245.7	267.4	267.4	267.8	267.8	279.3	238.9	254.0	254.0	254.4	254.4	263.2	231.7
9600	75	241.7	229.9	265.6	171.4	288.1	106.7	228.8	222.7	250.9	164.8	272.8	100.6	215.1	215.1	235.2	157.8	254.9	93.6
	80	255.0	255.0	266.7	219.3	293.5	159.4	243.0	243.0	253.5	212.6	277.7	153.0	230.1	230.1	238.3	205.0	260.8	146.2
	85	271.4	271.4	272.0	270.6	295.3	211.2	259.1	259.1	258.7	258.7	279.7	204.8	244.1	244.1	246.1	246.1	263.0	198.1
	90	285.9	285.9	287.4	287.4	298.2	259.4	274.3	274.3	274.7	274.7	282.8	252.4	259.6	259.5	260.8	260.8	266.6	245.1
		Ambient Temperature 115°F						Ambient Temperature 125°F											
6000	75	182.7	155.2	205.0	118.4	225.6	77.8	168.4	147.2	189.0	111.0	207.7	70.5						
	80	186.1	186.1	206.3	151.2	229.1	111.2	173.8	173.8	190.4	143.8	211.7	104.0						
	85	198.5	198.5	207.8	181.9	230.7	144.2	185.9	185.9	192.3	174.1	213.3	137.0						
	90	211.3	211.3	211.2	211.2	231.8	177.0	198.3	198.3	198.2	198.2	214.6	169.8						
7200	75	189.6	173.0	211.0	129.5	230.7	80.9	174.7	164.8	194.1	121.9	211.1	73.2						
	80	198.4	198.4	211.8	165.8	235.2	120.9	185.0	185.0	196.0	157.9	216.9	113.5						
	85	212.0	212.0	215.0	204.5	236.9	160.2	198.2	198.2	199.7	196.8	218.8	152.9						
	90	225.8	225.8	225.5	225.5	238.6	196.7	211.6	211.6	211.2	211.2	220.9	188.7						
8000	75	193.5	184.5	214.0	136.6	233.0	82.8	178.4	176.2	196.6	129.0	213.3	75.3						
	80	205.2	205.2	215.4	176.3	238.2	127.1	191.1	191.1	199.3	168.3	219.4	119.7						
	85	219.4	219.4	220.5	219.7	240.2	170.6	204.9	204.9	205.2	205.2	221.6	163.3						
	90	233.8	233.8	233.3	233.3	242.6	210.4	218.8	218.8	218.3	218.3	223.6	202.0						
8800	75	197.1	195.9	216.4	143.6	233.7	84.3	182.2	182.2	198.5	135.9	214.2	77.0						
	80	211.0	211.0	218.5	186.5	240.6	133.1	196.4	196.4	202.2	178.4	221.4	125.7						
	85	225.8	225.8	225.3	225.3	242.8	180.9	210.7	210.7	210.2	210.2	224.0	168.6						
	90	240.7	240.7	240.0	240.0	246.0	224.0	225.1	225.1	224.4	224.4	226.8	215.4						

Table 44. Gross cooling capacities — 20 tons standard efficiency, dual fuel (continued)

CFM	Ent DB (° F)	Entering Wet Bulb Temp (°F)						Entering Wet Bulb Temp (°F)						Entering Wet Bulb Temp (°F)					
		61		67		73		61		67		73		61		67		73	
		MBh	SHC	MBh	SHC	MBh	SHC	MBh	SHC	MBh	SHC	MBh	SHC	MBh	SHC	MBh	SHC	MBh	SHC
9600	75	201.0	201.0	218.3	150.4	234.7	86.0	186.5	186.5	200.1	142.6	214.1	78.3						
	80	216.1	216.1	222.0	197.0	242.6	139.1	201.0	201.0	204.7	188.3	223.0	131.6						
	85	230.5	230.5	230.8	230.8	244.0	185.6	215.7	215.7	216.0	216.0	226.2	177.5						
	90	246.7	246.7	245.9	245.9	249.3	237.3	230.5	230.5	229.7	229.7	230.0	228.6						

Notes:

1. All capacities shown are gross and have not considered indoor fan heat. To obtain NET cooling capacity subtract indoor fan heat. For indoor fan heat formula, refer to appropriate airflow table notes.
2. MBh = Total gross capacity
3. SHC = Sensible heat capacity

Table 45. Gross cooling capacities — 25 tons standard efficiency, dual fuel

CFM	Ent DB (° F)	Entering Wet Bulb Temp (°F)						Entering Wet Bulb Temp (°F)						Entering Wet Bulb Temp (°F)					
		61		67		73		61		67		73		61		67		73	
		MBh	SHC	MBh	SHC	MBh	SHC	MBh	SHC	MBh	SHC	MBh	SHC	MBh	SHC	MBh	SHC	MBh	SHC
		Ambient Temperature 85°F						Ambient Temperature 95°F						Ambient Temperature 105°F					
7500	75	247.0	202.5	274.6	156.4	304.5	109.0	233.9	195.5	260.2	149.4	288.6	102.1	219.9	188.1	244.8	142.1	271.7	94.8
	80	249.6	240.2	275.3	194.5	304.8	147.3	237.1	233.1	261.0	187.6	289.1	140.4	223.8	223.8	245.6	180.2	272.3	133.2
	85	260.7	260.7	276.1	232.6	305.4	185.6	249.4	249.4	262.1	225.7	289.8	178.7	237.2	237.2	247.0	218.5	273.1	171.5
	90	275.3	275.3	279.2	270.2	306.0	223.7	263.7	263.7	265.8	263.3	290.5	216.9	251.1	251.1	251.7	251.7	273.8	209.7
9000	75	255.2	223.3	282.4	168.5	312.3	112.5	241.5	216.2	267.4	161.4	295.7	105.6	227.0	208.7	251.3	154.0	278.0	98.2
	80	261.2	261.2	283.2	213.5	312.8	157.8	249.4	249.4	268.2	206.4	296.4	150.9	236.5	236.5	252.2	199.0	278.9	143.6
	85	276.8	276.8	285.2	258.8	313.5	203.0	264.5	264.5	270.7	251.9	297.2	196.0	251.3	251.3	255.2	242.9	279.8	188.8
	90	292.5	292.5	292.6	292.6	314.2	248.0	279.9	279.9	280.3	280.3	298.2	241.1	266.2	266.2	266.6	266.6	281.0	234.0
10000	75	259.7	236.7	286.5	176.2	316.3	114.7	245.9	228.0	271.1	169.1	299.2	107.7	231.2	220.2	254.7	161.6	281.2	100.3
	80	269.5	269.5	287.3	225.6	316.9	164.5	257.0	257.0	272.0	218.5	300.1	157.5	243.6	243.6	255.8	211.1	282.2	150.2
	85	285.6	285.6	290.5	274.1	317.7	214.1	272.8	272.8	275.8	266.9	301.0	207.1	258.9	258.9	260.3	259.3	283.2	199.8
	90	301.9	301.9	302.3	302.3	318.9	263.6	288.7	288.7	289.1	289.1	302.5	256.8	274.4	274.4	274.7	274.7	285.0	249.6
11000	75	263.9	247.9	289.9	183.6	319.6	116.8	249.9	240.5	274.2	176.4	302.2	110.3	235.1	232.6	257.5	168.9	283.8	102.3
	80	276.5	276.5	290.9	237.4	320.4	170.9	263.6	263.6	275.5	230.3	303.3	163.9	249.7	249.7	259.0	222.8	285.1	156.5
	85	293.2	293.2	295.5	290.1	321.2	224.8	279.9	279.9	280.9	280.9	304.2	217.8	265.5	265.5	265.6	265.6	286.1	210.5
	90	310.0	310.0	310.4	310.4	323.0	278.9	296.3	296.3	296.6	296.6	306.4	272.0	281.5	281.5	281.8	281.8	288.7	264.8
12000	75	267.8	260.1	292.8	190.7	322.4	119.6	253.8	252.6	276.9	183.5	304.8	111.7	239.0	239.0	259.9	175.9	286.1	104.3
	80	282.7	282.7	294.2	248.8	323.3	177.1	269.4	269.4	278.5	241.7	305.9	170.1	255.0	255.0	261.9	234.2	287.5	162.7
	85	299.8	299.8	300.5	300.5	324.2	235.2	286.0	286.0	286.0	286.0	306.9	228.2	271.2	271.2	271.5	271.5	288.5	220.8
	90	317.1	317.1	317.5	317.5	326.7	293.7	302.9	302.9	303.2	303.2	309.9	286.8	287.6	287.6	285.3	285.3	292.2	277.0
		Ambient Temperature 115°F						Ambient Temperature 125°F											
7500	75	204.8	180.2	228.3	134.4	253.7	87.3	188.7	172.0	210.7	126.2	234.3	79.3						
	80	210.5	210.5	229.2	172.5	254.4	125.7	196.5	196.5	211.6	164.4	235.4	117.8						
	85	223.9	223.9	230.8	210.9	255.3	164.0	209.6	209.6	213.7	201.4	236.3	156.2						
	90	237.5	237.5	237.9	237.9	256.2	202.2	222.8	222.8	223.1	223.1	237.3	194.4						
9000	75	211.5	199.2	234.2	146.2	259.1	90.8	195.2	190.6	215.9	138.0	239.0	82.6						
	80	222.6	222.6	235.2	191.3	260.3	136.0	207.6	207.6	217.1	183.1	240.5	128.1						
	85	237.0	237.0	238.8	235.0	261.3	181.2	221.5	221.5	221.8	221.8	241.5	173.3						
	90	251.5	251.5	251.8	251.8	262.8	226.5	235.6	235.6	235.9	235.9	243.4	218.6						
10000	75	215.6	212.0	237.2	153.7	261.9	92.7	199.3	199.3	218.5	145.5	241.5	84.6						
	80	229.1	229.1	238.5	203.3	263.3	142.5	213.6	213.6	220.2	195.2	243.2	134.6						
	85	244.0	244.0	244.2	244.2	264.3	192.2	228.0	228.0	228.2	228.2	244.2	184.2						
	90	259.1	259.1	259.4	259.4	266.6	242.1	242.5	242.5	242.8	242.8	247.1	231.8						
11000	75	219.6	219.6	239.7	161.0	264.3	94.6	204.0	204.0	220.7	152.7	243.6	86.6						
	80	234.8	234.8	241.5	215.0	265.9	148.9	218.7	218.7	223.0	204.4	245.4	140.9						
	85	250.1	250.1	250.3	250.3	266.9	202.8	233.5	233.5	233.7	233.7	246.6	194.9						
	90	265.5	265.5	265.9	265.9	270.1	254.8	248.4	248.4	248.7	248.7	250.6	246.4						
12000	75	224.1	224.1	241.8	168.0	266.3	96.5	208.1	208.1	222.6	159.7	245.3	88.5						
	80	239.6	239.6	244.2	223.9	268.0	155.0	223.1	223.1	225.6	215.2	247.3	147.0						
	85	255.3	255.3	255.6	255.6	269.2	213.2	238.2	238.2	238.5	238.5	248.7	205.2						
	90	271.2	271.2	271.4	271.4	273.5	269.0	253.5	253.5	253.7	253.7	254.1	254.1						

Table 45. Gross cooling capacities — 25 tons standard efficiency, dual fuel (continued)

CFM	Ent DB (° F)	Entering Wet Bulb Temp (°F)						Entering Wet Bulb Temp (°F)						Entering Wet Bulb Temp (°F)					
		61		67		73		61		67		73		61		67		73	
		MBh	SHC	MBh	SHC	MBh	SHC	MBh	SHC	MBh	SHC	MBh	SHC	MBh	SHC	MBh	SHC	MBh	SHC

Notes:

1. All capacities shown are gross and have not considered indoor fan heat. To obtain NET cooling capacity subtract indoor fan heat. For indoor fan heat formula, refer to appropriate airflow table notes.
2. MBh = Total gross capacity
3. SHC = Sensible heat capacity

Table 46. Gross cooling capacities — 3 tons high efficiency, dual fuel

CFM	Ent DB (° F)	Entering Wet Bulb Temp (°F)						Entering Wet Bulb Temp (°F)						Entering Wet Bulb Temp (°F)					
		61		67		73		61		67		73		61		67		73	
		MBh	SHC	MBh	SHC	MBh	SHC	MBh	SHC	MBh	SHC	MBh	SHC	MBh	SHC	MBh	SHC	MBh	SHC
		Ambient Temperature 85°F						Ambient Temperature 95°F						Ambient Temperature 105°F					
900	75	32.6	26.2	36.9	20.5	41.5	14.6	30.6	25.1	34.7	19.4	39.2	13.5	28.6	23.9	32.5	18.2	36.7	12.3
	80	32.6	30.7	36.9	25.4	41.6	19.6	30.6	29.5	34.8	24.3	39.2	18.5	28.5	28.3	32.6	23.2	36.8	17.3
	85	31.7	31.7	37.0	30.4	41.6	24.5	29.5	29.5	34.9	29.3	39.3	23.5	28.0	28.0	32.7	28.1	36.9	22.3
	90	32.9	32.9	37.0	34.8	41.7	29.5	31.4	31.4	34.8	33.7	39.4	28.4	29.8	29.8	32.5	32.5	37.0	27.3
1080	75	33.9	29.2	38.2	22.3	42.9	15.1	31.8	28.1	35.9	21.2	40.4	14.0	29.7	26.9	33.6	20.0	37.7	12.9
	80	33.8	33.8	38.3	28.2	43.0	21.1	31.6	31.6	36.1	27.1	40.5	20.0	29.4	29.4	33.7	26.0	37.9	18.9
	85	33.7	33.7	38.4	34.2	43.1	27.1	32.1	32.1	36.2	32.5	40.7	26.0	30.4	30.4	33.8	31.3	38.1	24.9
	90	35.8	35.8	38.2	38.2	43.2	33.1	34.1	34.1	35.9	35.9	40.8	32.0	32.4	32.4	33.4	33.4	38.2	30.9
1200	75	34.6	31.2	38.9	23.5	43.6	15.5	32.5	30.0	36.6	22.3	41.0	14.4	30.2	28.3	34.2	21.1	38.3	13.2
	80	34.4	34.4	39.0	30.1	43.7	22.2	32.2	32.2	36.7	28.9	41.2	21.1	29.8	29.8	34.3	27.8	38.5	19.9
	85	35.3	35.3	39.1	36.1	43.9	28.8	33.6	33.6	36.9	34.9	41.4	27.7	31.8	31.8	34.4	33.7	38.7	26.6
	90	37.4	37.4	38.8	38.8	44.0	35.4	35.7	35.7	36.5	36.5	41.5	34.3	33.9	33.9	33.9	33.9	38.8	33.2
1320	75	35.1	33.1	39.5	24.6	44.2	15.8	33.0	31.4	37.1	23.5	41.5	14.7	30.7	30.2	34.7	22.3	38.7	13.5
	80	34.9	34.9	39.7	31.9	44.3	23.2	32.6	32.6	37.3	30.7	41.8	22.1	30.8	30.8	34.8	29.6	39.0	20.9
	85	36.6	36.6	39.8	38.5	44.5	30.5	34.9	34.9	37.4	37.3	41.9	29.4	33.0	33.0	34.9	34.9	39.2	28.2
	90	38.9	38.9	39.4	39.4	44.6	37.8	37.1	37.1	37.2	37.2	42.1	36.7	35.2	35.2	35.2	35.2	39.4	34.8
1440	75	35.9	34.6	40.0	25.7	44.6	16.1	33.5	33.3	37.6	24.6	41.9	15.0	31.1	31.1	35.1	23.4	39.1	13.8
	80	35.5	35.5	40.2	33.7	44.9	24.2	33.7	33.7	37.8	32.5	42.2	23.0	31.8	31.8	35.3	31.3	39.5	21.9
	85	37.9	37.9	40.3	40.3	45.1	32.2	36.0	36.0	37.9	37.9	42.5	31.0	34.0	34.0	35.3	35.3	39.7	29.9
	90	40.2	40.2	40.3	40.3	45.2	40.1	38.4	38.4	38.4	38.4	42.6	38.2	36.3	36.3	36.4	36.4	39.9	37.0
		Ambient Temperature 115°F						Ambient Temperature 125°F											
900	75	26.4	22.7	30.1	17.0	34.0	11.1	24.1	21.1	27.5	15.8	31.1	9.9						
	80	26.2	26.2	30.2	22.0	34.1	16.2	23.7	23.7	27.6	20.8	31.3	14.9						
	85	26.3	26.3	30.3	27.0	34.2	21.2	24.5	24.5	27.8	25.2	31.5	19.9						
	90	28.1	28.1	30.0	30.0	34.4	26.1	26.2	26.2	27.3	27.3	31.6	24.9						
1080	75	27.4	25.2	31.0	18.8	34.9	11.7	24.9	23.8	28.4	17.5	31.9	10.4						
	80	26.9	26.9	31.2	24.8	35.1	17.7	24.7	24.7	28.5	23.5	32.2	16.5						
	85	28.5	28.5	31.3	30.1	35.3	23.7	26.6	26.6	28.6	28.6	32.4	22.5						
	90	30.5	30.5	30.8	30.8	35.5	29.7	28.5	28.5	28.5	28.5	32.5	27.8						
1200	75	27.9	27.0	31.6	19.9	35.4	12.0	25.3	25.3	28.8	18.7	32.8	10.9						
	80	27.8	27.8	31.7	26.6	35.7	18.7	25.8	25.8	29.0	24.6	32.7	17.4						
	85	29.8	29.8	31.8	31.8	35.9	25.4	27.7	27.7	29.0	29.0	32.9	24.1						
	90	31.9	31.9	31.9	31.9	36.0	31.3	29.7	29.7	29.7	29.7	33.1	29.9						
1320	75	28.3	28.3	32.0	21.0	35.8	12.3	25.7	25.7	29.2	19.8	32.6	11.0						
	80	28.8	28.8	32.2	28.3	36.1	19.7	26.7	26.7	29.4	26.3	33.1	18.4						
	85	30.9	30.9	32.2	32.2	36.4	27.0	28.7	28.7	29.4	29.4	33.3	25.8						
	90	33.1	33.1	33.1	33.1	36.5	33.5	30.8	30.8	30.8	30.8	33.5	32.1						
1440	75	28.6	28.6	32.4	22.2	36.1	12.6	26.0	26.0	29.5	20.9	32.9	11.3						
	80	29.7	29.7	32.6	29.3	36.5	20.7	27.5	27.5	29.8	28.0	33.4	19.4						
	85	31.9	31.9	32.6	32.6	36.8	28.7	29.6	29.6	29.6	29.6	33.7	27.4						
	90	34.1	34.1	34.2	34.2	36.9	35.7	31.8	31.8	31.8	31.8	33.8	33.8						

Notes:

1. All capacities shown are gross and have not considered indoor fan heat. To obtain NET cooling capacity subtract indoor fan heat. For indoor fan heat formula, refer to appropriate airflow table notes.
2. MBh = Total gross capacity
3. SHC = Sensible heat capacity

Table 47. Gross cooling capacities — 4 tons high efficiency, dual fuel

CFM	Ent DB (°F)	Entering Wet Bulb Temp (°F)						Entering Wet Bulb Temp (°F)						Entering Wet Bulb Temp (°F)					
		61		67		73		61		67		73		61		67		73	
		MBh	SHC	MBh	SHC	MBh	SHC	MBh	SHC	MBh	SHC	MBh	SHC	MBh	SHC	MBh	SHC	MBh	SHC
		Ambient Temperature 85°F						Ambient Temperature 95°F						Ambient Temperature 105°F					
1200	75	44.1	34.9	49.9	27.5	55.7	19.6	41.6	33.5	47.2	26.1	52.7	18.2	39.0	32.1	44.4	24.7	49.5	16.8
	80	44.1	41.1	49.7	33.8	55.8	26.1	41.7	39.7	47.0	32.5	52.8	24.7	39.1	38.2	44.5	31.2	49.7	23.3
	85	44.9	44.9	49.8	40.3	55.9	32.6	42.9	42.9	47.4	39.0	52.9	31.2	40.7	40.7	44.3	37.5	49.8	29.8
	90	47.5	47.5	49.8	46.4	55.9	39.1	45.5	45.5	47.5	45.2	53.0	37.7	43.3	43.3	44.4	43.6	49.9	36.3
1440	75	45.8	38.9	51.8	29.9	57.5	20.3	43.2	37.2	48.6	28.3	54.3	18.9	40.5	35.7	45.9	27.0	51.0	17.5
	80	46.0	46.0	51.6	37.5	57.7	28.2	43.5	43.5	49.1	36.2	54.5	26.8	41.1	41.1	45.8	34.6	51.2	25.3
	85	48.4	48.4	52.0	45.1	57.8	36.0	46.2	46.2	49.2	43.7	54.7	34.6	43.9	43.9	45.9	42.0	51.4	33.1
	90	51.3	51.3	51.9	51.9	57.9	43.7	49.1	49.1	49.5	49.5	54.8	42.3	46.7	46.7	47.1	47.1	51.5	40.9
1600	75	46.7	41.2	52.8	31.4	58.4	20.8	44.1	39.7	49.8	30.0	55.2	19.3	41.3	38.2	46.8	28.5	51.8	17.9
	80	47.3	47.3	52.9	40.0	58.7	29.5	45.1	45.1	50.0	38.6	55.4	28.1	42.7	42.7	46.5	37.0	52.1	26.6
	85	50.4	50.4	52.7	48.1	58.8	38.1	48.3	48.3	50.2	46.9	55.6	36.7	45.9	45.9	46.8	45.2	52.2	35.3
	90	53.5	53.5	53.6	53.6	58.9	46.8	51.1	51.1	51.5	51.5	55.7	45.4	48.6	48.6	48.6	48.6	52.4	43.6
1760	75	47.6	43.6	53.2	32.8	59.2	21.2	44.8	42.2	50.2	31.3	55.9	19.8	42.0	40.6	47.4	30.0	52.4	18.3
	80	49.0	49.0	53.7	42.4	59.5	30.8	46.6	46.6	50.7	41.0	56.2	29.4	44.1	44.1	47.2	39.0	52.7	27.9
	85	52.1	52.1	53.6	51.3	59.6	40.3	50.0	50.0	50.7	49.8	56.4	38.9	47.4	47.4	47.7	47.7	52.9	37.4
	90	55.4	55.4	55.5	55.5	59.8	49.8	52.9	52.9	53.0	53.0	56.5	48.0	50.2	50.2	50.3	50.3	53.1	46.5
1920	75	48.3	46.1	53.9	34.2	59.9	21.6	45.5	44.6	50.8	32.8	56.4	20.2	42.7	42.7	48.0	31.4	52.9	18.7
	80	50.4	50.4	54.0	44.6	60.2	32.1	47.9	47.9	51.4	42.9	56.8	30.6	45.6	45.6	47.8	41.2	53.3	29.2
	85	54.0	54.0	54.5	54.4	60.3	42.5	51.5	51.5	51.6	51.6	57.0	41.0	48.5	48.5	48.6	48.6	53.5	39.6
	90	57.1	57.1	57.1	57.1	60.5	52.4	54.4	54.4	54.5	54.5	57.2	50.9	51.7	51.7	51.8	51.8	53.8	49.4
		Ambient Temperature 115°F						Ambient Temperature 125°F											
1200	75	36.3	30.6	41.1	23.1	46.2	15.3	33.4	28.8	38.0	21.6	42.7	13.8						
	80	36.4	36.4	41.2	29.6	46.4	21.8	33.6	33.6	38.1	28.0	42.9	20.3						
	85	38.5	38.5	41.3	35.8	46.5	28.4	36.1	36.1	38.2	34.2	43.1	26.8						
	90	41.0	41.0	41.5	41.5	46.7	34.8	38.5	38.5	38.6	38.6	43.2	33.3						
1440	75	37.6	34.1	42.5	25.4	47.5	16.0	34.6	32.5	39.2	23.8	43.8	14.4						
	80	38.7	38.7	42.6	33.1	47.8	23.8	36.1	36.1	39.3	31.6	44.2	22.3						
	85	41.4	41.4	42.8	40.5	48.0	31.6	38.7	38.7	39.6	38.9	44.4	30.1						
	90	44.1	44.1	44.2	44.2	48.1	39.4	41.4	41.4	41.5	41.5	44.5	37.5						
1600	75	38.4	36.6	43.2	26.8	48.2	16.4	35.3	34.9	39.8	25.3	44.4	14.8						
	80	40.2	40.2	43.3	35.5	48.5	25.1	37.5	37.5	40.0	33.5	44.8	23.6						
	85	43.0	43.0	43.7	43.6	48.7	33.8	40.2	40.2	40.4	40.4	45.0	32.2						
	90	45.9	45.9	46.0	46.0	48.9	42.0	43.0	43.0	43.1	43.1	45.2	40.4						
1760	75	39.1	39.0	43.7	28.3	48.7	16.8	36.0	36.0	40.3	26.7	44.9	15.2						
	80	41.5	41.5	44.0	37.4	49.1	26.4	38.7	38.7	40.5	35.7	45.3	24.8						
	85	44.4	44.4	44.5	44.5	49.3	35.9	41.5	41.5	41.6	41.6	45.5	34.4						
	90	47.4	47.4	47.5	47.5	49.6	44.9	44.4	44.4	44.5	44.5	45.9	43.3						
1920	75	39.7	39.7	44.2	29.7	49.2	17.2	36.8	36.8	40.7	28.1	45.3	15.6						
	80	42.6	42.6	44.5	39.6	49.6	27.7	39.7	39.7	41.0	37.9	45.8	26.1						
	85	45.7	45.7	45.7	45.7	49.8	38.1	42.7	42.7	42.7	42.7	46.0	36.5						
	90	48.8	48.8	48.8	48.8	50.2	47.8	45.6	45.6	45.7	45.7	46.4	46.2						

Notes:

1. All capacities shown are gross and have not considered indoor fan heat. To obtain NET cooling capacity subtract indoor fan heat. For indoor fan heat formula, refer to appropriate airflow table notes.
2. MBh = Total gross capacity
3. SHC = Sensible heat capacity

Table 48. Gross cooling capacities — 5 tons high efficiency, dual fuel

CFM	Ent DB (°F)	Entering Wet Bulb Temp (°F)						Entering Wet Bulb Temp (°F)						Entering Wet Bulb Temp (°F)					
		61		67		73		61		67		73		61		67		73	
		MBh	SHC	MBh	SHC	MBh	SHC	MBh	SHC	MBh	SHC	MBh	SHC	MBh	SHC	MBh	SHC	MBh	SHC
		Ambient Temperature 85°F						Ambient Temperature 95°F						Ambient Temperature 105°F					
1500	75	54.8	44.0	61.5	34.3	68.7	24.2	51.7	42.2	58.0	32.5	64.9	22.5	48.4	40.5	54.5	30.8	60.9	20.7
	80	54.8	51.6	61.6	42.5	68.8	32.5	51.7	49.9	58.2	40.8	65.1	30.8	48.5	48.0	54.7	39.0	61.2	29.1
	85	55.2	55.2	61.8	50.7	69.0	40.8	52.7	52.7	58.4	49.0	65.3	39.1	50.0	50.0	54.9	47.3	61.4	37.4
	90	58.4	58.4	61.8	58.3	69.1	49.1	55.8	55.8	58.4	56.6	65.5	47.4	53.1	53.1	54.9	54.7	61.6	45.7

Table 48. Gross cooling capacities — 5 tons high efficiency, dual fuel (continued)

CFM	Ent DB (°F)	Entering Wet Bulb Temp (°F)						Entering Wet Bulb Temp (°F)						Entering Wet Bulb Temp (°F)					
		61		67		73		61		67		73		61		67		73	
		MBh	SHC	MBh	SHC	MBh	SHC	MBh	SHC	MBh	SHC	MBh	SHC	MBh	SHC	MBh	SHC	MBh	SHC
1800	75	56.9	49.0	63.6	37.2	70.7	25.1	53.6	47.2	60.0	35.5	66.7	23.4	50.1	45.4	56.3	33.7	62.5	21.6
	80	57.1	57.1	63.8	47.1	71.0	35.1	53.8	53.8	60.2	45.4	67.1	33.4	50.5	50.5	56.5	43.6	63.0	31.6
	85	59.4	59.4	64.0	57.0	71.3	45.1	56.7	56.7	60.4	55.2	67.4	43.4	53.8	53.8	56.7	52.7	63.3	41.6
	90	62.9	62.9	64.2	64.2	71.4	55.0	60.1	60.1	60.8	60.8	67.6	53.3	57.1	57.1	57.2	57.2	63.5	51.5
2000	75	57.9	52.2	64.7	39.1	71.8	25.6	54.5	49.7	61.0	37.4	67.7	23.9	51.1	47.8	57.2	35.6	63.4	22.1
	80	58.4	58.4	65.0	50.1	72.2	36.8	55.2	55.2	61.3	48.4	68.2	35.0	52.3	52.3	57.5	46.6	64.0	33.3
	85	61.8	61.8	65.1	60.3	72.4	47.8	58.9	58.9	61.5	58.5	68.5	46.1	55.8	55.8	57.7	56.6	64.3	44.4
	90	65.5	65.5	65.7	65.7	72.6	58.8	62.5	62.5	62.6	62.6	68.7	57.1	59.3	59.3	59.4	59.4	64.5	55.4
2200	75	58.9	54.7	65.7	41.0	72.6	26.1	55.4	52.8	61.9	39.2	68.4	24.4	51.9	50.9	58.0	37.4	64.0	22.6
	80	60.1	60.1	65.9	53.1	73.1	38.4	57.1	57.1	62.2	51.4	69.0	36.7	54.0	54.0	58.2	49.5	64.8	34.9
	85	63.9	63.9	66.2	64.3	73.4	50.6	60.8	60.8	62.5	62.4	69.4	48.9	57.6	57.6	58.7	58.7	65.1	47.1
	90	67.7	67.7	67.8	67.8	73.6	62.7	64.6	64.6	64.7	64.7	69.6	61.0	61.3	61.3	61.4	61.4	65.3	58.1
2400	75	59.7	57.7	66.5	42.9	73.4	26.7	56.2	55.8	62.6	41.1	69.1	24.9	52.6	52.6	58.6	39.3	64.6	23.1
	80	61.8	61.8	66.7	56.1	74.0	40.0	58.7	58.7	62.9	54.3	69.8	38.3	55.5	55.5	58.9	51.4	65.4	36.5
	85	65.7	65.7	67.2	67.2	74.3	53.3	62.5	62.5	63.5	63.5	70.1	51.6	59.2	59.2	59.6	59.6	65.8	49.8
	90	69.7	69.7	69.8	69.8	74.5	66.5	66.4	66.4	66.5	66.5	70.4	63.7	63.0	63.0	63.1	63.1	66.1	61.8
		Ambient Temperature 115°F						Ambient Temperature 125°F											
1500	75	45.2	38.7	50.8	29.0	56.8	19.0	41.8	36.9	47.1	27.2	52.6	17.2						
	80	45.3	45.3	51.1	37.3	57.2	27.3	42.0	42.0	47.4	35.5	53.0	25.5						
	85	47.3	47.3	51.2	45.5	57.4	35.6	44.5	44.5	47.5	43.0	53.3	33.9						
	90	50.3	50.3	51.3	51.3	57.6	43.9	47.4	47.4	47.7	47.7	53.5	42.1						
1800	75	46.7	42.9	52.4	31.9	58.2	19.8	43.2	40.9	48.5	30.0	53.8	17.9						
	80	47.5	47.5	52.7	41.8	58.8	29.8	44.6	44.6	48.8	40.0	54.5	28.0						
	85	50.8	50.8	52.9	50.8	59.1	39.8	47.7	47.7	49.1	48.9	54.8	38.0						
	90	54.0	54.0	54.1	54.1	59.3	49.7	50.8	50.8	50.9	50.9	55.0	47.0						
2000	75	47.5	45.9	53.2	33.7	58.9	20.3	44.0	43.9	49.3	31.9	54.4	18.4						
	80	49.3	49.3	53.5	44.8	59.6	31.5	46.2	46.2	49.5	42.0	55.2	29.6						
	85	52.7	52.7	53.9	53.9	60.0	42.6	49.4	49.4	50.0	50.0	55.6	40.7						
	90	56.1	56.1	56.2	56.2	60.2	52.6	52.7	52.7	52.8	52.8	55.9	50.6						
2200	75	48.3	48.3	53.9	35.6	59.5	20.8	44.7	44.7	49.9	33.7	54.9	18.9						
	80	50.8	50.8	54.2	46.7	60.3	33.1	47.6	47.6	50.2	44.7	55.8	31.2						
	85	54.3	54.3	54.8	54.8	60.7	45.3	50.9	50.9	50.9	50.9	56.2	43.4						
	90	57.9	57.9	58.0	58.0	61.0	56.2	54.3	54.3	54.4	54.4	56.6	54.2						
2400	75	49.0	49.0	54.5	37.4	60.0	21.2	45.4	45.4	50.4	35.6	55.3	19.4						
	80	52.2	52.2	54.9	49.4	60.9	34.7	48.8	48.8	50.8	47.4	56.4	32.8						
	85	55.8	55.8	55.8	55.8	61.3	48.0	52.3	52.3	52.3	52.3	56.8	46.1						
	90	59.5	59.5	59.6	59.6	61.7	59.8	55.8	55.8	55.8	55.8	57.2	57.2						

Notes:

1. All capacities shown are gross and have not considered indoor fan heat. To obtain NET cooling capacity subtract indoor fan heat. For indoor fan heat formula, refer to appropriate airflow table notes.
2. MBh = Total gross capacity
3. SHC = Sensible heat capacity

Table 49. Gross cooling capacities — 6 tons high efficiency, dual fuel

CFM	Ent DB (°F)	Entering Wet Bulb Temp (°F)						Entering Wet Bulb Temp (°F)						Entering Wet Bulb Temp (°F)					
		61		67		73		61		67		73		61		67		73	
		MBh	SHC	MBh	SHC	MBh	SHC	MBh	SHC	MBh	SHC	MBh	SHC	MBh	SHC	MBh	SHC	MBh	SHC
		Ambient Temperature 85°F						Ambient Temperature 95°F						Ambient Temperature 105°F					
1800	75	77.3	59.1	76.2	42.2	84.9	30.1	65.1	52.1	72.9	40.5	81.1	28.4	61.8	50.2	69.2	38.7	76.9	26.5
	80	68.6	63.5	76.5	52.1	85.3	40.1	65.7	61.8	73.2	50.4	81.5	38.4	62.5	59.9	69.5	48.6	78.0	36.8
	85	70.7	70.7	76.8	62.0	85.5	50.0	68.2	68.2	73.5	60.1	81.8	48.3	65.4	65.4	69.9	58.2	77.7	46.5
	90	74.8	74.8	77.3	71.5	85.8	59.9	72.2	72.2	74.1	69.8	82.1	58.2	69.3	69.3	70.5	68.0	78.0	56.4
2160	75	71.0	59.6	79.0	45.8	87.5	31.2	67.9	57.8	75.5	44.1	83.5	29.4	64.4	55.9	71.6	42.2	79.1	27.6
	80	72.0	71.4	79.4	57.7	88.1	43.2	68.9	68.9	75.8	56.0	84.1	41.4	65.9	65.9	72.0	53.7	79.8	39.6
	85	76.1	76.1	80.0	69.1	88.4	55.1	73.3	73.3	76.5	67.3	84.5	53.4	70.1	70.1	72.7	65.4	80.1	51.5
	90	80.6	80.6	81.0	80.9	88.8	66.7	77.7	77.7	77.8	77.8	84.9	64.9	74.4	74.4	74.6	74.6	81.1	63.2

Table 49. Gross cooling capacities — 6 tons high efficiency, dual fuel (continued)

CFM	Ent DB (° F)	Entering Wet Bulb Temp (°F)						Entering Wet Bulb Temp (°F)						Entering Wet Bulb Temp (°F)					
		61		67		73		61		67		73		61		67		73	
		MBh	SHC	MBh	SHC	MBh	SHC	MBh	SHC	MBh	SHC	MBh	SHC	MBh	SHC	MBh	SHC	MBh	SHC
2400	75	72.6	63.4	80.4	48.1	88.9	31.9	69.3	61.6	76.7	46.3	85.4	30.3	65.7	59.6	72.7	44.5	80.2	28.2
	80	74.4	74.4	80.9	60.9	89.6	45.2	71.5	71.5	77.3	59.1	85.4	43.4	68.3	68.3	73.3	57.1	80.9	41.5
	85	79.1	79.1	81.7	73.9	89.9	58.4	76.1	76.1	78.1	72.1	85.8	56.7	72.8	72.8	74.2	70.1	81.4	54.8
	90	83.8	83.8	84.0	84.0	90.6	71.2	80.7	80.7	80.8	80.8	86.5	69.3	77.2	77.2	77.4	77.4	82.5	67.5
2640	75	73.9	67.1	81.6	50.4	90.0	32.5	70.6	65.3	77.8	48.6	86.3	30.9	67.0	63.3	73.7	46.7	81.1	28.8
	80	76.8	76.8	82.2	64.3	90.7	47.1	73.8	73.8	78.5	62.4	86.5	45.4	70.5	70.5	74.4	60.4	81.9	43.5
	85	81.7	81.7	83.2	78.7	91.3	61.8	78.5	78.5	79.5	76.8	87.0	59.4	75.1	75.1	75.6	74.8	82.9	57.6
	90	86.6	86.6	86.8	86.8	91.9	75.6	83.3	83.3	83.5	83.5	87.8	73.7	79.7	79.7	79.8	79.8	83.6	71.9
2880	75	75.2	70.8	82.6	52.6	90.9	33.1	71.8	68.9	78.7	50.8	86.5	31.3	68.1	66.9	74.5	48.2	81.7	29.4
	80	79.0	79.0	83.4	67.7	91.8	49.1	75.8	75.8	79.6	65.8	87.4	47.3	72.3	72.3	75.4	63.7	82.7	45.4
	85	84.0	84.0	84.7	83.4	92.8	64.5	80.7	80.7	80.9	80.9	88.0	62.4	77.1	77.1	77.2	77.2	83.4	60.4
	90	89.1	89.1	89.3	89.3	93.2	80.0	85.7	85.7	85.8	85.8	89.3	78.2	81.9	81.9	82.0	82.0	84.7	76.2
		Ambient Temperature 115°F						Ambient Temperature 125°F											
1800	75	58.2	48.2	65.2	36.8	73.1	24.9	54.3	46.0	60.8	34.7	67.5	22.5						
	80	58.9	58.0	65.5	46.7	73.4	34.8	55.1	55.1	61.1	44.6	68.1	32.5						
	85	62.3	62.3	66.0	56.2	73.2	44.5	58.8	58.8	61.6	54.0	68.4	42.5						
	90	66.1	66.1	66.7	66.0	73.6	54.5	62.5	62.5	62.7	62.7	68.7	52.1						
2160	75	60.6	53.8	67.3	40.2	74.4	25.6	56.4	51.6	62.6	38.1	69.7	23.7						
	80	62.6	62.6	67.8	51.7	75.0	37.6	58.9	58.9	63.2	49.4	69.9	35.5						
	85	66.7	66.7	68.5	63.3	75.4	49.5	62.9	62.9	63.9	61.1	70.3	47.0						
	90	70.8	70.8	71.0	71.0	76.0	60.9	66.9	66.9	67.0	67.0	71.2	58.8						
2400	75	61.8	57.5	68.3	42.5	75.3	26.2	57.6	55.2	63.5	39.8	70.0	24.1						
	80	64.8	64.8	69.0	55.0	76.1	39.5	61.0	61.0	64.3	52.7	70.8	37.4						
	85	69.1	69.1	69.9	68.0	76.6	52.3	65.1	65.1	65.2	65.2	71.3	50.0						
	90	73.4	73.4	73.6	73.6	77.2	65.3	69.3	69.3	69.4	69.4	72.4	63.1						
2640	75	63.0	61.1	69.1	44.1	76.0	26.8	58.6	58.6	64.3	41.7	71.1	24.9						
	80	66.8	66.8	70.0	58.3	76.9	41.5	62.8	62.8	65.2	56.0	71.5	39.3						
	85	71.2	71.2	71.4	71.4	77.5	55.3	67.0	67.0	67.1	67.1	72.2	53.0						
	90	75.7	75.7	75.8	75.8	78.4	69.6	71.3	71.3	71.7	71.7	73.1	67.3						
2880	75	64.0	64.0	69.9	46.0	76.5	27.4	60.0	60.0	65.0	43.6	70.9	25.2						
	80	68.5	68.5	70.9	61.6	77.6	43.4	64.3	64.3	66.0	59.2	72.5	40.4						
	85	73.1	73.1	73.2	73.2	78.4	58.2	68.7	68.7	68.8	68.8	73.0	55.9						
	90	77.7	77.7	77.8	77.8	79.4	73.9	73.3	73.3	73.2	73.2	74.0	71.6						

Notes:

1. All capacities shown are gross and have not considered indoor fan heat. To obtain NET cooling capacity subtract indoor fan heat. For indoor fan heat formula, refer to appropriate airflow table notes.
2. MBh = Total gross capacity
3. SHC = Sensible heat capacity

Table 50. Gross cooling capacities — 7.5 tons high efficiency, dual fuel

CFM	Ent DB (° F)	Entering Wet Bulb Temp (°F)						Entering Wet Bulb Temp (°F)						Entering Wet Bulb Temp (°F)					
		61		67		73		61		67		73		61		67		73	
		MBh	SHC	MBh	SHC	MBh	SHC	MBh	SHC	MBh	SHC	MBh	SHC	MBh	SHC	MBh	SHC	MBh	SHC
		Ambient Temperature 85°F						Ambient Temperature 95°F						Ambient Temperature 105°F					
2250	75	89.8	71.4	89.2	50.1	99.7	34.9	75.9	62.7	85.2	48.0	95.3	32.9	71.9	60.5	80.9	45.8	90.5	30.7
	80	80.2	76.8	89.3	62.4	99.8	47.4	76.8	74.8	85.4	60.4	95.5	45.4	72.9	72.6	81.1	58.2	90.8	43.2
	85	83.6	83.6	89.7	74.8	100.0	59.8	80.6	80.6	85.8	72.5	95.7	57.8	77.1	77.1	81.6	70.3	91.0	55.6
	90	88.5	88.5	90.5	86.9	100.2	72.2	85.4	85.4	86.7	84.9	95.9	70.2	81.9	81.9	82.6	82.6	91.2	68.1
2700	75	82.6	71.9	92.2	54.5	102.7	36.2	78.9	69.8	88.0	52.4	98.0	34.1	74.7	67.4	83.5	50.1	93.1	31.9
	80	84.3	84.3	92.4	69.3	102.9	51.2	81.1	81.1	88.3	67.2	98.3	49.1	77.4	77.4	83.8	65.0	93.4	46.9
	85	89.6	89.6	93.2	83.8	103.1	66.2	86.2	86.2	89.1	81.7	98.6	64.1	82.6	82.6	84.7	79.4	93.6	61.9
	90	95.0	95.0	95.2	95.2	103.5	81.1	91.6	91.6	91.7	91.7	99.0	79.0	87.8	87.8	87.9	87.9	94.1	76.4
3000	75	84.3	76.6	93.7	57.3	104.2	37.1	80.6	74.5	89.4	55.2	99.4	34.9	76.3	72.2	84.8	53.0	94.3	32.7
	80	87.4	87.4	94.1	73.9	104.5	53.7	84.0	84.0	89.8	71.4	99.8	51.6	80.2	80.2	85.3	69.1	94.7	49.4
	85	93.0	93.0	95.1	89.9	104.7	70.3	89.4	89.4	91.0	87.7	100.0	68.2	85.6	85.6	86.5	85.5	95.0	66.0
	90	98.7	98.7	98.8	98.8	105.3	86.4	95.0	95.0	95.2	95.2	100.5	84.2	91.0	91.0	91.2	91.2	95.7	82.0

Table 50. Gross cooling capacities — 7.5 tons high efficiency, dual fuel (continued)

CFM	Ent DB (°F)	Entering Wet Bulb Temp (°F)						Entering Wet Bulb Temp (°F)						Entering Wet Bulb Temp (°F)					
		61		67		73		61		67		73		61		67		73	
		MBh	SHC	MBh	SHC	MBh	SHC	MBh	SHC	MBh	SHC	MBh	SHC	MBh	SHC	MBh	SHC	MBh	SHC
3300	75	85.9	81.4	95.0	60.1	105.5	37.8	82.0	79.2	90.6	58.0	100.6	35.7	77.8	76.9	85.9	55.7	95.4	33.5
	80	90.1	90.1	95.5	77.8	105.8	56.2	86.5	86.5	91.2	75.6	100.9	54.0	82.6	82.6	86.5	73.3	95.8	51.8
	85	95.9	95.9	96.9	95.9	106.1	74.4	92.2	92.2	92.7	92.7	101.2	72.3	88.2	88.2	88.3	88.3	96.2	70.1
	90	101.8	101.8	102.0	102.0	106.9	92.1	98.0	98.0	98.1	98.1	102.1	89.9	93.8	93.8	94.0	94.0	97.1	87.6
3600	75	87.3	86.1	96.1	62.9	106.5	38.6	83.4	83.4	91.6	60.7	101.4	36.4	79.1	79.1	86.8	58.5	96.3	34.2
	80	92.5	92.5	96.8	82.1	106.9	58.6	88.8	88.8	92.4	79.9	101.9	56.4	84.7	84.7	87.7	77.6	96.8	54.2
	85	98.5	98.5	98.7	98.7	107.3	78.5	94.7	94.7	94.8	94.8	102.3	76.3	90.5	90.5	90.6	90.6	97.2	74.2
	90	104.6	104.6	104.8	104.8	108.3	97.6	100.6	100.6	100.6	100.6	103.4	95.4	96.3	96.3	96.4	96.4	98.4	93.2
		Ambient Temperature 115°F						Ambient Temperature 125°F											
2250	75	67.8	57.9	76.4	43.6	85.6	28.4	63.4	55.5	71.5	41.2	80.3	26.1						
	80	68.9	68.9	76.6	55.9	85.8	40.9	65.1	65.1	71.8	53.6	80.5	38.6						
	85	73.5	73.5	77.1	68.0	86.0	53.4	69.7	69.7	72.4	65.6	80.8	51.0						
	90	78.2	78.2	78.4	78.4	86.3	65.8	74.3	74.3	74.4	74.4	81.1	63.5						
2700	75	70.5	65.1	78.7	47.8	87.9	29.7	65.9	62.6	73.7	45.4	82.3	27.3						
	80	73.6	73.6	79.1	62.4	88.2	44.7	69.6	69.6	74.1	59.9	82.7	42.3						
	85	78.7	78.7	80.1	77.1	88.5	59.6	74.5	74.5	75.2	74.7	83.0	57.2						
	90	83.7	83.7	83.9	83.9	89.0	74.1	79.4	79.4	79.6	79.6	83.6	71.6						
3000	75	72.0	69.8	79.9	50.6	89.0	30.4	67.4	67.3	74.8	48.2	83.4	28.0						
	80	76.2	76.2	80.5	66.7	89.4	47.1	72.0	72.0	75.4	64.2	83.8	44.7						
	85	81.5	81.5	81.9	81.9	89.8	63.7	77.1	77.1	77.2	77.2	84.2	61.3						
	90	86.8	86.8	86.9	86.9	90.5	79.7	82.2	82.2	82.4	82.4	85.0	77.2						
3300	75	73.4	73.4	80.9	53.4	90.0	31.2	68.9	68.9	75.7	50.9	84.2	28.8						
	80	78.5	78.5	81.7	70.9	90.5	49.5	74.1	74.1	76.5	68.4	84.7	47.1						
	85	83.9	83.9	84.1	84.1	90.8	67.8	79.4	79.4	79.5	79.5	85.2	64.7						
	90	89.4	89.4	89.5	89.5	91.9	85.2	84.7	84.7	84.8	84.8	86.3	82.7						
3600	75	75.0	75.0	81.8	56.1	90.8	31.9	70.6	70.6	76.4	53.7	84.9	29.5						
	80	80.5	80.5	82.7	75.2	91.3	51.9	75.9	75.9	77.5	72.6	85.5	49.5						
	85	86.1	86.1	86.2	86.2	91.8	71.1	81.3	81.3	81.5	81.5	86.1	68.6						
	90	91.7	91.7	91.8	91.8	93.1	90.8	86.8	86.8	86.9	86.9	87.5	87.5						

Notes:

1. All capacities shown are gross and have not considered indoor fan heat. To obtain NET cooling capacity subtract indoor fan heat. For indoor fan heat formula, refer to appropriate airflow table notes.
2. MBh = Total gross capacity
3. SHC = Sensible heat capacity

Table 51. Gross cooling capacities — 8.5 tons high efficiency, dual fuel

CFM	Ent DB (°F)	Entering Wet Bulb Temp (°F)						Entering Wet Bulb Temp (°F)						Entering Wet Bulb Temp (°F)					
		61		67		73		61		67		73		61		67		73	
		MBh	SHC	MBh	SHC	MBh	SHC	MBh	SHC	MBh	SHC	MBh	SHC	MBh	SHC	MBh	SHC	MBh	SHC
		Ambient Temperature 85°F						Ambient Temperature 95°F						Ambient Temperature 105°F					
2550	75	108.3	84.4	107.8	60.4	119.6	42.8	92.4	75.0	102.8	58.0	113.9	40.4	87.7	72.3	97.5	55.5	108.0	38.0
	80	97.7	91.1	108.0	74.4	119.8	57.0	93.3	88.7	103.1	72.1	114.2	54.6	88.7	86.2	97.8	69.6	108.3	52.2
	85	100.9	100.9	108.5	88.6	120.1	71.1	97.1	97.1	103.6	85.9	114.5	68.8	93.0	93.0	98.4	83.4	108.6	66.3
	90	106.5	106.5	109.3	102.3	120.4	85.3	102.6	102.6	104.5	99.9	114.9	82.9	98.4	98.4	99.4	97.4	109.0	80.5
3060	75	100.7	85.5	111.4	65.3	123.2	44.3	95.9	83.0	106.0	62.9	117.1	41.8	91.0	80.4	100.5	60.4	110.9	39.3
	80	102.2	102.2	111.8	82.3	123.6	61.3	97.9	97.9	106.5	79.8	117.6	58.9	93.6	93.6	101.0	77.3	111.4	56.4
	85	108.0	108.0	112.6	98.7	123.9	78.3	103.8	103.8	107.4	96.2	118.0	75.9	99.3	99.3	102.0	93.6	111.8	73.4
	90	114.1	114.1	114.4	114.4	124.5	95.3	109.7	109.7	110.0	110.0	118.6	92.9	105.0	105.0	105.3	105.3	112.5	89.9
3400	75	102.7	90.8	113.2	68.5	125.0	45.2	97.9	88.3	107.7	66.1	118.8	42.7	92.8	85.7	102.0	63.5	112.3	40.2
	80	105.7	105.7	113.8	87.4	125.5	64.1	101.4	101.4	108.3	84.4	119.3	61.7	96.8	96.8	102.7	81.8	112.9	59.1
	85	112.0	112.0	114.9	105.5	125.9	83.0	107.5	107.5	109.6	103.0	119.8	80.6	102.7	102.7	104.0	100.4	113.4	78.0
	90	118.4	118.4	118.6	118.6	126.7	101.4	113.7	113.7	113.9	113.9	120.6	98.8	108.7	108.7	108.9	108.9	114.3	96.2
3740	75	104.5	96.1	114.7	71.7	126.5	46.0	99.6	93.6	109.1	69.2	120.1	43.6	94.4	90.9	103.2	66.7	113.5	41.0
	80	108.9	108.9	115.5	91.8	127.1	66.9	104.3	104.3	109.9	89.2	120.7	64.4	99.6	99.6	104.2	86.6	114.2	61.9
	85	115.4	115.4	117.0	112.3	127.6	87.7	110.7	110.7	111.6	109.8	121.3	85.2	105.7	105.7	106.0	106.0	114.8	82.7
	90	122.2	122.1	122.4	122.4	128.6	107.7	117.2	117.2	117.4	117.4	122.4	105.1	112.0	112.0	112.2	112.2	116.0	102.5

Table 51. Gross cooling capacities — 8.5 tons high efficiency, dual fuel (continued)

CFM	Ent DB (° F)	Entering Wet Bulb Temp (°F)						Entering Wet Bulb Temp (°F)						Entering Wet Bulb Temp (°F)					
		61		67		73		61		67		73		61		67		73	
		MBh	SHC	MBh	SHC	MBh	SHC	MBh	SHC	MBh	SHC	MBh	SHC	MBh	SHC	MBh	SHC	MBh	SHC
4080	75	106.2	101.4	116.0	74.8	127.7	46.9	101.2	98.8	110.3	72.3	121.2	44.4	95.9	95.9	104.3	69.8	114.5	41.8
	80	111.7	111.7	117.0	96.6	128.4	69.6	107.0	107.0	111.3	94.0	121.9	67.1	102.0	102.0	105.4	91.3	115.3	64.6
	85	118.5	118.5	119.0	119.0	129.0	92.3	113.5	113.5	113.7	113.7	122.6	89.1	108.3	108.3	108.5	108.5	116.0	86.4
	90	125.5	125.5	125.7	125.7	130.3	114.0	120.3	120.3	120.5	120.5	124.0	111.4	114.8	114.8	115.0	115.0	117.5	108.7
		Ambient Temperature 115°F						Ambient Temperature 125°F											
2550	75	82.7	69.7	91.9	53.0	101.8	35.4	77.4	66.9	86.1	50.3	95.2	32.8						
	80	83.8	83.6	92.3	67.1	102.2	49.6	79.1	79.1	86.4	64.4	95.7	47.0						
	85	88.7	88.7	92.9	80.8	102.5	63.8	84.0	84.0	87.1	78.0	96.0	61.2						
	90	93.9	93.9	94.1	94.1	102.9	77.9	89.0	89.0	89.2	89.2	96.5	75.3						
3060	75	85.8	77.7	94.6	57.8	104.3	36.8	80.2	74.8	88.4	55.1	97.5	34.1						
	80	89.0	89.0	95.2	74.3	104.9	53.8	84.0	84.0	89.1	71.4	98.0	51.2						
	85	94.5	94.5	96.3	91.0	105.3	70.8	89.4	89.4	90.2	88.1	98.5	68.2						
	90	100.1	100.1	100.3	100.3	106.0	87.2	94.7	94.7	94.9	94.9	99.3	84.4						
3400	75	87.4	82.9	96.0	60.9	105.6	37.6	81.8	80.1	89.6	58.2	98.6	34.9						
	80	91.9	91.9	96.8	79.1	106.3	56.6	86.7	86.7	90.5	76.2	99.2	53.9						
	85	97.7	97.7	98.2	97.7	106.8	75.5	92.2	92.2	92.4	92.4	99.8	72.1						
	90	103.4	103.4	103.6	103.6	107.8	93.5	97.8	97.8	98.0	98.0	100.8	90.6						
3740	75	89.0	88.2	97.1	64.0	106.7	38.4	83.4	83.4	90.6	61.3	99.5	35.7						
	80	94.5	94.5	98.1	83.8	107.4	59.3	89.1	89.1	91.7	80.9	100.2	56.6						
	85	100.4	100.4	100.6	100.6	108.1	79.3	94.7	94.7	94.9	94.9	101.0	76.4						
	90	106.4	106.4	106.6	106.6	109.3	99.7	100.5	100.5	100.7	100.7	102.3	96.9						
4080	75	90.6	90.6	98.1	67.1	107.5	39.2	85.3	85.3	91.5	63.4	100.2	36.5						
	80	96.7	96.7	99.3	88.5	108.3	62.0	91.1	91.1	92.8	85.6	101.0	59.2						
	85	102.8	102.8	102.9	102.9	109.2	83.6	96.9	96.9	97.0	97.0	102.0	80.7						
	90	109.0	109.0	109.2	109.2	110.7	105.9	102.9	102.9	103.1	103.1	103.6	103.0						

Notes:

1. All capacities shown are gross and have not considered indoor fan heat. To obtain NET cooling capacity subtract indoor fan heat. For indoor fan heat formula, refer to appropriate airflow table notes.
2. MBh = Total gross capacity

Table 52. Gross cooling capacities — 10 tons high efficiency, dual fuel

CFM	Ent DB (° F)	Entering Wet Bulb Temp (°F)						Entering Wet Bulb Temp (°F)						Entering Wet Bulb Temp (°F)					
		61		67		73		61		67		73		61		67		73	
		MBh	SHC	MBh	SHC	MBh	SHC	MBh	SHC	MBh	SHC	MBh	SHC	MBh	SHC	MBh	SHC	MBh	SHC
		Ambient Temperature 85°F						Ambient Temperature 95°F						Ambient Temperature 105°F					
3000	75	107.6	87.6	120.0	67.9	133.0	47.5	102.6	84.8	114.5	65.2	126.6	44.7	97.3	82.0	108.6	62.3	119.9	41.9
	80	108.3	102.7	120.6	84.4	133.8	64.2	103.4	99.9	115.0	81.7	127.6	61.5	98.2	97.0	109.1	78.8	121.0	58.6
	85	111.2	111.2	120.9	100.8	134.4	80.8	107.0	107.0	115.4	98.1	128.3	78.1	102.5	102.5	109.5	94.0	121.8	75.3
	90	117.6	117.6	121.6	115.8	134.9	97.3	113.2	113.2	116.3	113.0	128.7	94.6	108.6	108.6	110.6	110.1	122.3	91.8
3600	75	111.5	96.0	124.0	73.7	136.6	49.2	106.2	93.1	118.1	70.9	129.9	46.4	100.7	90.0	111.9	68.0	122.8	43.5
	80	113.0	113.0	124.7	93.5	137.9	69.2	108.0	108.0	118.8	90.7	131.4	66.5	102.8	102.8	112.6	87.8	124.5	63.6
	85	119.0	119.0	125.2	111.5	138.7	89.2	114.3	114.3	119.5	108.6	132.2	86.4	109.4	109.4	113.4	105.6	125.3	83.5
	90	125.9	125.9	126.9	126.9	139.2	108.9	121.0	121.0	121.4	121.4	132.7	106.2	115.9	115.9	116.1	116.1	125.9	103.3
4000	75	113.7	102.1	126.1	77.5	138.5	50.2	108.3	99.1	120.1	74.7	131.6	47.4	102.6	95.9	113.6	71.8	124.3	44.5
	80	116.1	116.1	126.8	99.5	140.1	72.5	111.4	111.4	120.8	96.7	133.3	69.8	106.4	106.4	114.4	93.8	126.2	66.9
	85	123.3	123.3	127.6	119.3	140.9	94.7	118.4	118.4	121.7	116.3	134.2	91.9	113.1	113.1	115.6	113.2	127.1	89.0
	90	130.5	130.5	130.5	130.5	141.4	116.6	125.4	125.4	125.6	125.6	134.7	111.7	120.0	120.0	120.2	120.2	127.7	108.6
4400	75	115.6	108.1	127.9	81.2	140.0	51.2	110.1	105.0	121.7	78.4	132.9	48.4	104.3	101.8	115.1	75.4	125.5	45.4
	80	119.6	119.6	128.6	105.4	141.9	75.8	114.7	114.7	122.4	100.3	135.0	73.0	109.4	109.4	115.9	97.1	127.7	70.1
	85	127.0	127.0	129.8	127.0	142.8	100.1	121.9	121.9	123.8	123.8	135.9	97.3	116.4	116.4	117.5	117.5	128.7	94.4
	90	134.5	134.5	134.7	134.7	143.3	121.9	129.2	129.2	129.4	129.4	136.5	118.8	123.5	123.5	123.7	123.7	129.5	115.7
4800	75	117.3	114.0	129.4	84.9	141.3	52.2	111.7	110.9	123.0	82.0	134.1	49.3	105.8	105.8	116.3	79.1	126.4	46.4
	80	122.7	122.7	130.1	108.8	143.4	79.0	117.5	117.5	123.8	105.7	136.4	76.2	112.1	112.1	117.2	102.4	128.9	73.3
	85	130.3	130.3	131.8	131.8	144.3	105.5	125.0	125.0	125.8	125.8	137.3	102.7	119.3	119.3	119.5	119.5	130.0	99.8
	90	138.1	138.1	138.2	138.2	145.0	129.0	132.5	132.5	132.7	132.7	138.2	125.9	126.6	126.6	126.7	126.7	131.0	122.7
		Ambient Temperature 115°F						Ambient Temperature 125°F											

Table 52. Gross cooling capacities — 10 tons high efficiency, dual fuel (continued)

CFM	Ent DB (°F)	Entering Wet Bulb Temp (°F)						Entering Wet Bulb Temp (°F)						Entering Wet Bulb Temp (°F)					
		61		67		73		61		67		73		61		67		73	
		MBh	SHC	MBh	SHC	MBh	SHC	MBh	SHC	MBh	SHC	MBh	SHC	MBh	SHC	MBh	SHC	MBh	SHC
3000	75	91.6	77.8	102.3	59.4	112.8	38.9	85.7	74.5	95.7	56.3	105.3	35.9						
	80	92.8	92.8	102.9	75.9	114.1	55.7	87.0	87.0	96.3	72.8	106.8	52.7						
	85	97.7	97.7	103.4	90.8	114.9	72.3	92.5	92.5	96.9	87.6	107.6	69.3						
	90	103.6	103.6	104.7	104.7	115.4	88.8	98.2	98.2	98.4	98.4	108.1	85.8						
3600	75	94.8	86.8	105.3	65.0	115.4	40.5	88.6	83.4	98.4	61.9	107.5	37.4						
	80	97.8	97.8	106.0	84.8	117.2	60.6	92.3	92.3	99.1	79.7	109.5	57.6						
	85	104.1	104.1	107.0	102.3	118.1	80.6	98.4	98.4	100.3	99.0	110.4	77.5						
	90	110.4	110.4	110.6	110.6	118.6	98.3	104.5	104.5	104.7	104.7	111.1	94.9						
4000	75	96.6	92.7	106.9	68.7	116.7	41.5	90.3	89.2	99.7	65.6	108.5	38.3						
	80	101.0	101.0	107.6	88.4	118.8	63.9	95.2	95.2	100.6	84.9	110.9	60.8						
	85	107.6	107.6	109.0	109.0	119.7	86.0	101.6	101.6	102.2	102.2	111.9	82.9						
	90	114.2	114.2	114.4	114.4	120.4	105.3	108.0	108.0	108.1	108.1	112.7	101.9						
4400	75	98.2	98.2	108.2	72.4	117.7	42.4	91.8	91.8	100.8	69.2	109.3	39.2						
	80	103.8	103.8	109.1	93.7	120.1	67.1	97.8	97.8	101.9	90.2	112.0	63.9						
	85	110.6	110.6	111.0	111.0	121.1	91.4	104.3	104.3	104.3	104.3	113.1	88.3						
	90	117.5	117.5	117.6	117.6	122.0	112.3	111.0	111.0	111.1	111.1	114.2	108.8						
4800	75	99.7	99.7	109.2	76.0	118.4	43.3	93.3	93.3	101.8	72.8	109.9	40.1						
	80	106.2	106.2	110.3	99.0	121.2	70.2	100.0	100.0	103.0	95.4	113.0	67.1						
	85	113.2	113.2	113.4	113.4	122.3	96.8	106.8	106.8	106.9	106.9	114.2	89.8						
	90	120.3	120.3	120.4	120.4	123.5	119.3	113.6	113.6	113.7	113.7	115.6	115.6						

Notes:

1. All capacities shown are gross and have not considered indoor fan heat. To obtain NET cooling capacity subtract indoor fan heat. For indoor fan heat formula, refer to appropriate airflow table notes.
2. MBh = Total gross capacity
3. SHC = Sensible heat capacity

Table 53. Gross cooling capacities — 12.5 tons high efficiency, dual fuel

CFM	Ent DB (°F)	Entering Wet Bulb Temp (°F)						Entering Wet Bulb Temp (°F)						Entering Wet Bulb Temp (°F)					
		61		67		73		61		67		73		61		67		73	
		MBh	SHC	MBh	SHC	MBh	SHC	MBh	SHC	MBh	SHC	MBh	SHC	MBh	SHC	MBh	SHC	MBh	SHC
		Ambient Temperature 85°F						Ambient Temperature 95°F						Ambient Temperature 105°F					
3750	75	136.7	107.4	153.6	84.0	171.2	59.5	128.5	102.6	144.6	79.2	161.2	54.6	119.8	97.5	135.1	74.1	150.7	49.6
	80	137.2	126.7	154.0	103.9	171.5	79.6	129.2	121.8	145.1	99.1	161.7	74.7	120.7	116.7	135.6	94.0	151.3	69.7
	85	141.0	141.0	154.3	123.7	171.9	99.5	134.1	134.1	145.5	118.9	162.2	94.7	126.7	126.7	136.0	113.9	151.8	89.7
	90	149.4	149.4	154.9	143.0	172.2	119.4	144.4	144.4	146.2	138.1	162.6	114.6	134.7	134.7	137.0	133.0	152.2	109.6
4500	75	142.0	119.2	159.1	91.1	176.4	61.7	133.4	114.3	149.6	86.1	165.9	56.8	124.3	108.4	139.6	81.0	154.8	51.6
	80	143.5	142.3	159.6	114.8	177.0	85.7	135.3	135.3	150.1	109.9	166.7	80.7	127.4	127.4	140.2	104.7	155.8	75.6
	85	151.6	151.6	160.1	138.5	177.5	109.5	144.1	144.1	150.8	132.9	167.3	104.6	136.1	136.1	140.6	127.4	156.4	99.5
	90	160.8	160.8	161.8	161.5	177.9	133.2	153.1	153.1	153.4	153.4	167.7	128.3	144.8	144.8	144.6	144.6	156.9	123.3
5000	75	144.9	126.2	161.9	95.6	179.0	63.0	136.1	121.0	152.2	90.6	168.3	58.1	126.8	115.7	141.9	85.4	157.0	52.9
	80	148.1	148.1	162.4	121.9	179.9	89.5	140.5	140.5	152.8	116.9	169.3	84.6	132.2	132.2	142.5	111.7	158.1	79.4
	85	157.6	157.6	162.8	147.0	180.4	115.9	149.7	149.7	153.9	142.2	169.9	111.0	141.2	141.2	143.4	136.6	158.8	105.8
	90	167.2	167.2	167.0	167.0	180.8	142.1	159.0	159.0	159.3	159.3	170.4	137.2	150.3	150.3	150.1	150.1	159.4	132.1
5500	75	147.5	133.4	164.3	100.0	181.2	64.3	138.5	128.2	154.4	94.9	170.2	59.3	129.1	122.9	143.8	89.7	158.7	54.1
	80	153.0	153.0	164.8	128.7	182.2	93.3	144.9	144.9	155.0	123.7	171.4	88.3	136.4	136.4	144.6	118.5	160.0	83.2
	85	162.8	162.8	166.2	156.5	182.8	122.2	154.6	154.6	156.7	151.4	172.0	117.2	145.7	145.7	146.6	146.1	160.7	112.0
	90	172.8	172.8	172.5	172.5	183.4	151.0	164.3	164.3	164.5	164.5	172.8	146.0	155.2	155.2	154.8	154.8	161.6	139.7
6000	75	149.8	140.5	166.3	104.2	183.1	65.5	140.7	135.3	156.1	99.1	171.9	60.5	131.3	129.9	145.5	93.9	160.2	55.3
	80	157.2	157.2	166.9	135.5	184.2	97.0	148.9	148.9	156.9	130.4	173.2	92.0	140.1	140.1	146.3	123.9	161.6	86.8
	85	167.4	167.4	168.3	165.2	184.8	128.3	158.8	158.8	158.8	158.8	173.9	123.3	149.7	149.7	149.4	149.4	162.3	118.2
	90	177.7	177.7	177.3	177.3	185.6	158.5	168.9	168.9	168.5	168.5	174.9	153.3	159.4	159.4	159.0	159.0	163.6	148.0
		Ambient Temperature 115°F						Ambient Temperature 125°F											
3750	75	110.5	92.3	125.0	68.9	139.5	44.4	100.6	86.1	114.2	63.3	127.7	38.9						
	80	111.6	111.4	125.5	88.8	140.3	64.5	102.7	102.7	114.8	83.3	128.6	59.0						
	85	118.8	118.8	126.0	108.6	140.9	84.5	110.2	110.2	115.0	102.2	129.2	79.1						
	90	126.6	126.6	127.3	127.3	141.3	104.4	117.8	117.8	117.7	117.7	129.7	99.0						

Table 53. Gross cooling capacities — 12.5 tons high efficiency, dual fuel (continued)

CFM	Ent DB (° F)	Entering Wet Bulb Temp (°F)						Entering Wet Bulb Temp (°F)						Entering Wet Bulb Temp (°F)					
		61		67		73		61		67		73		61		67		73	
		MBh	SHC	MBh	SHC	MBh	SHC	MBh	SHC	MBh	SHC	MBh	SHC	MBh	SHC	MBh	SHC	MBh	SHC
4500	75	114.7	102.9	129.0	75.6	143.2	46.3	104.5	97.1	117.7	70.0	130.9	40.8						
	80	119.0	119.0	129.6	99.4	144.3	70.3	110.0	110.0	118.4	93.8	132.1	64.8						
	85	127.4	127.4	130.2	121.9	145.0	94.2	118.1	118.1	119.3	116.2	132.8	88.7						
	90	135.9	135.9	136.1	136.1	145.5	118.0	126.3	126.3	126.1	126.1	133.5	111.5						
5000	75	117.0	110.2	131.1	80.0	145.1	47.6	106.7	104.3	119.5	74.4	138.3	44.6						
	80	123.4	123.4	131.7	106.3	146.3	74.1	114.0	114.0	120.3	99.5	133.9	68.6						
	85	132.2	132.2	132.9	131.2	147.0	100.5	122.5	122.5	122.3	122.3	134.6	95.0						
	90	141.0	141.0	140.7	140.7	147.8	125.7	131.0	131.0	130.7	130.7	135.6	120.0						
5500	75	119.2	117.3	132.8	84.2	147.3	48.9	108.9	108.9	121.0	78.6	133.8	43.2						
	80	127.3	127.3	133.6	111.9	148.0	77.8	117.5	117.5	122.1	106.0	135.4	72.3						
	85	136.3	136.3	136.5	136.5	148.7	106.7	126.2	126.2	126.4	126.4	136.1	101.2						
	90	145.5	145.5	145.1	145.1	149.9	134.1	135.0	135.0	134.6	134.6	137.5	128.4						
6000	75	121.4	121.4	134.2	88.4	147.9	49.9	111.7	111.7	122.3	82.7	134.8	44.3						
	80	130.6	130.6	134.8	117.9	149.5	81.4	120.5	120.5	123.6	112.3	136.6	75.9						
	85	139.9	139.9	139.6	139.6	150.2	112.8	129.5	129.5	129.7	129.7	137.4	105.7						
	90	149.4	149.4	148.9	148.9	151.7	142.4	138.6	138.6	138.8	138.8	139.4	136.6						

Notes:

1. All capacities shown are gross and have not considered indoor fan heat. To obtain NET cooling capacity subtract indoor fan heat. For indoor fan heat formula, refer to appropriate airflow table notes.
2. MBh = Total gross capacity
3. SHC = Sensible heat capacity

Table 54. Gross cooling capacities — 15 tons high efficiency, dual fuel

CFM	Ent DB (° F)	Entering Wet Bulb Temp (°F)						Entering Wet Bulb Temp (°F)						Entering Wet Bulb Temp (°F)					
		61		67		73		61		67		73		61		67		73	
		MBh	SHC	MBh	SHC	MBh	SHC	MBh	SHC	MBh	SHC	MBh	SHC	MBh	SHC	MBh	SHC	MBh	SHC
		Ambient Temperature 85°F						Ambient Temperature 95°F						Ambient Temperature 105°F					
4500	75	165.6	131.5	185.1	103.1	205.6	73.1	156.7	126.6	175.4	98.3	194.8	68.9	147.2	121.5	165.1	93.2	183.3	63.9
	80	166.4	154.4	185.7	127.1	206.4	97.8	157.7	149.4	176.1	122.2	195.9	93.1	148.6	144.2	165.9	117.2	184.8	88.1
	85	171.5	171.5	186.2	150.9	207.1	121.8	164.1	164.1	176.7	146.1	196.7	117.1	156.2	156.2	166.5	141.1	185.7	112.2
	90	181.4	181.4	187.1	173.7	207.6	145.7	173.8	173.8	177.9	168.8	197.3	141.1	165.7	165.7	168.1	163.7	186.3	136.1
5400	75	171.7	145.4	191.3	111.4	211.3	76.1	162.4	140.4	181.1	106.5	200.0	71.3	152.5	133.8	170.3	101.3	188.0	66.2
	80	173.9	172.7	192.0	139.9	212.7	104.9	165.2	165.2	181.9	135.0	201.7	100.1	156.8	156.8	171.2	129.8	190.0	95.1
	85	183.7	183.7	192.9	168.3	213.6	133.5	175.7	175.7	182.9	162.1	202.7	128.8	167.0	167.0	172.4	156.8	191.1	123.8
	90	194.5	194.5	195.5	195.5	214.1	162.0	186.2	186.2	186.5	186.5	203.3	157.2	177.4	177.4	177.7	177.7	191.9	152.3
6000	75	175.0	153.0	194.5	116.6	214.2	77.6	165.5	147.8	184.0	111.7	202.6	72.7	155.5	142.3	173.0	106.5	188.8	67.1
	80	179.4	179.4	195.3	148.1	215.9	109.5	171.1	171.1	184.9	143.1	204.6	104.6	162.3	162.3	173.9	138.0	192.7	99.6
	85	190.5	190.5	196.6	178.0	216.9	141.1	182.1	182.1	186.5	172.9	205.7	136.3	173.0	173.0	175.9	167.6	193.8	131.3
	90	201.7	201.7	202.0	202.0	216.5	172.1	193.1	193.1	193.4	193.4	206.5	167.8	183.8	183.8	184.1	184.1	194.8	162.8
6600	75	178.0	161.4	197.1	121.7	216.6	79.0	168.4	156.1	186.5	116.7	204.8	74.1	158.2	150.6	175.2	111.5	192.3	69.1
	80	184.9	184.9	198.0	156.1	218.6	113.9	176.3	176.3	187.4	151.2	207.1	109.0	167.1	167.1	176.2	146.0	195.0	104.0
	85	196.4	196.4	200.0	188.7	218.5	148.0	187.6	187.6	189.8	183.6	208.2	143.6	178.2	178.2	179.2	178.2	196.1	138.6
	90	208.0	208.0	208.4	208.4	219.4	182.5	199.0	199.0	199.3	199.3	209.3	178.1	189.3	189.3	189.6	189.6	197.4	170.9
7200	75	180.7	169.6	199.4	126.7	218.7	80.4	171.0	164.3	188.5	121.6	206.6	75.5	160.8	158.7	177.0	116.4	193.9	70.4
	80	189.7	189.7	200.4	164.0	220.9	118.2	180.8	180.8	189.6	156.9	209.2	113.3	170.9	170.9	178.4	151.4	196.8	108.3
	85	201.6	201.6	203.2	199.2	220.8	155.2	192.5	192.5	193.1	193.1	210.3	150.8	182.7	182.7	182.8	182.8	198.0	145.8
	90	213.6	213.6	213.9	213.9	222.0	190.5	204.2	204.2	204.5	204.5	211.8	185.9	194.2	194.2	194.5	194.5	199.9	180.6
		Ambient Temperature 115°F						Ambient Temperature 125°F											
4500	75	137.2	116.1	154.2	88.0	171.3	58.7	126.4	109.3	142.6	82.5	158.4	53.3						
	80	138.9	138.8	155.0	111.9	173.0	83.0	129.5	129.5	143.5	106.5	160.5	77.7						
	85	147.7	147.7	155.8	135.8	174.0	107.1	138.6	138.6	144.4	129.0	161.5	101.8						
	90	157.1	157.1	157.8	157.8	174.7	131.1	147.8	147.8	148.1	148.1	162.3	125.8						
5400	75	142.1	128.1	158.9	96.0	175.4	61.0	131.1	122.2	146.8	90.4	162.0	55.5						
	80	147.8	147.8	159.9	124.5	177.8	90.0	138.1	138.1	147.8	119.0	164.7	84.6						
	85	157.8	157.8	161.4	151.2	178.9	118.6	148.0	148.0	149.8	145.5	165.9	113.3						
	90	168.0	168.0	168.3	168.3	179.7	147.2	157.8	157.8	158.1	158.1	166.9	140.0						

Table 54. Gross cooling capacities — 15 tons high efficiency, dual fuel (continued)

CFM	Ent DB (° F)	Entering Wet Bulb Temp (°F)						Entering Wet Bulb Temp (°F)						Entering Wet Bulb Temp (°F)					
		61		67		73		61		67		73		61		67		73	
		MBh	SHC	MBh	SHC	MBh	SHC	MBh	SHC	MBh	SHC	MBh	SHC	MBh	SHC	MBh	SHC	MBh	SHC
6000	75	144.9	136.5	161.3	101.1	177.5	62.4	133.8	130.5	148.9	95.5	163.8	56.9						
	80	152.9	152.9	162.3	132.7	180.2	94.4	142.8	142.8	150.1	124.9	166.8	89.0						
	85	163.4	163.4	164.7	162.0	181.3	126.1	153.1	153.1	153.3	153.3	168.1	120.7						
	90	173.9	173.9	174.2	174.2	182.5	155.6	163.3	163.3	163.6	163.6	169.5	149.9						
6600	75	147.6	144.8	163.3	106.1	177.6	63.2	136.5	136.5	150.6	100.5	165.1	58.2						
	80	157.4	157.4	164.5	138.3	182.2	98.8	146.9	146.9	152.2	132.3	168.6	93.4						
	85	168.2	168.2	168.3	168.3	183.4	133.4	157.5	157.5	157.7	157.7	169.9	128.0						
	90	179.1	179.1	179.3	179.3	185.0	165.4	168.1	168.1	168.3	168.3	171.9	159.6						
7200	75	150.2	150.2	164.9	111.0	180.4	65.0	139.7	139.7	152.0	105.3	166.0	59.5						
	80	161.3	161.3	166.6	145.6	183.8	103.0	150.5	150.5	154.1	139.5	170.0	97.6						
	85	172.4	172.4	172.6	172.6	185.2	140.6	161.3	161.3	161.5	161.5	171.5	135.1						
	90	183.6	183.6	183.8	183.8	187.4	175.0	172.2	172.2	171.7	171.7	174.2	169.2						

Notes:

1. All capacities shown are gross and have not considered indoor fan heat. To obtain NET cooling capacity subtract indoor fan heat. For indoor fan heat formula, refer to appropriate airflow table notes.
2. MBh = Total gross capacity
3. SHC = Sensible heat capacity

Table 55. Gross cooling capacities — 17.5 ton high efficiency, dual fuel

CFM	Ent DB (° F)	Entering Wet Bulb Temp (°F)						Entering Wet Bulb Temp (°F)						Entering Wet Bulb Temp (°F)					
		61		67		73		61		67		73		61		67		73	
		MBh	SHC	MBh	SHC	MBh	SHC	MBh	SHC	MBh	SHC	MBh	SHC	MBh	SHC	MBh	SHC	MBh	SHC
		Ambient Temperature 85°F						Ambient Temperature 95°F						Ambient Temperature 105°F					
5250	75	190.0	151.5	210.9	118.3	232.1	83.7	180.3	146.3	200.3	113.0	220.1	78.5	170.3	140.8	189.3	107.7	206.0	72.0
	80	191.2	177.4	211.9	145.9	234.1	111.7	181.9	172.0	201.5	140.7	222.5	106.6	172.2	166.4	190.5	135.3	208.7	100.6
	85	197.2	197.2	212.7	173.3	235.3	139.5	189.1	189.1	202.3	168.2	222.0	133.6	180.5	180.5	190.2	162.3	210.1	128.4
	90	208.2	208.2	214.1	199.2	236.2	167.0	199.9	199.9	204.1	193.8	222.9	161.2	191.1	191.1	192.4	187.7	211.0	155.9
6300	75	196.6	167.2	217.5	127.5	238.1	86.4	186.4	159.6	206.4	122.2	223.6	80.4	176.0	153.8	194.8	116.7	210.6	75.1
	80	199.6	197.8	218.7	160.3	240.9	119.7	190.1	190.1	207.6	155.0	226.7	113.7	180.9	180.9	196.1	149.6	214.1	108.4
	85	210.4	210.4	219.9	190.9	242.3	152.7	201.5	201.5	209.1	185.3	228.2	146.7	192.2	192.2	196.5	178.9	215.6	141.3
	90	222.4	222.4	223.5	223.5	241.0	184.5	213.2	213.2	213.5	213.5	229.1	179.4	202.3	202.3	202.6	202.6	216.7	174.1
7000	75	200.1	174.8	221.0	133.4	239.0	87.3	189.9	169.0	209.5	128.0	226.2	82.0	179.3	163.0	197.6	122.5	212.8	76.6
	80	205.3	205.3	222.2	169.5	242.2	124.0	196.3	196.3	210.8	164.2	229.8	118.8	186.8	186.8	199.0	158.7	216.8	113.4
	85	217.7	217.7	224.1	203.0	243.6	160.3	208.4	208.4	213.1	197.4	231.3	155.1	198.5	198.5	200.2	190.8	218.4	149.7
	90	228.7	228.7	230.6	230.6	244.6	196.4	219.1	219.1	220.9	220.9	232.5	191.3	208.9	208.9	209.2	209.2	219.7	182.7
7700	75	203.5	184.0	223.8	139.1	241.4	88.9	193.0	178.1	212.1	133.7	228.3	83.5	182.2	172.0	199.9	128.1	214.5	77.9
	80	211.3	211.3	225.1	178.5	245.0	128.9	201.8	201.8	213.6	173.2	232.3	123.7	191.9	191.9	201.5	167.7	219.0	118.3
	85	224.0	224.0	227.9	214.8	246.5	168.5	214.3	214.3	216.8	209.1	233.9	163.3	204.0	204.0	203.7	202.4	220.8	157.9
	90	235.3	235.3	237.3	237.3	247.8	208.0	225.2	225.2	227.2	227.2	235.4	202.9	214.6	214.6	214.9	214.9	222.6	193.4
8400	75	206.5	193.0	226.2	144.6	243.3	90.3	195.9	187.0	214.2	139.2	229.9	85.0	185.0	180.8	201.8	133.6	215.8	79.5
	80	216.4	216.4	227.7	187.4	247.3	133.7	206.6	206.6	215.9	178.2	234.4	128.4	196.3	196.3	203.8	172.0	220.9	123.0
	85	229.6	229.6	231.5	226.4	248.9	176.6	219.4	219.4	220.3	220.3	236.1	171.3	208.8	208.8	207.4	207.4	222.7	165.9
	90	241.1	241.0	243.2	243.2	250.6	215.6	230.6	230.6	232.8	232.8	238.1	209.9	219.6	219.6	219.8	219.8	225.1	203.9
		Ambient Temperature 115°F						Ambient Temperature 125°F											
5250	75	159.9	135.3	177.9	102.2	194.7	67.7	148.9	127.2	165.8	96.5	181.2	62.1						
	80	162.2	160.6	179.1	129.8	197.9	95.9	152.0	152.0	167.1	124.1	184.7	90.3						
	85	171.5	171.5	180.1	155.3	199.4	123.7	161.9	161.9	168.3	149.2	186.3	118.1						
	90	181.8	181.8	182.8	182.6	200.4	151.3	171.9	171.9	172.2	172.2	185.6	145.0						
6300	75	165.2	147.7	182.8	111.1	198.9	70.2	154.0	141.3	170.1	105.4	192.4	67.3						
	80	171.3	171.3	184.1	144.0	202.9	103.7	161.2	161.2	171.6	138.2	189.0	98.0						
	85	182.3	182.3	186.3	173.6	204.6	136.7	171.8	171.8	174.1	167.4	190.9	131.0						
	90	192.1	192.1	193.7	193.7	205.8	169.5	181.3	181.3	182.9	182.9	192.2	160.4						
7000	75	168.3	156.8	185.2	116.9	200.7	71.7	156.8	150.3	172.2	111.0	194.1	68.7						
	80	176.8	176.8	186.7	149.7	205.4	108.7	166.2	166.2	174.0	143.2	191.2	103.0						
	85	188.2	188.2	189.9	185.4	207.2	145.0	177.2	177.2	177.8	177.8	193.2	139.4						
	90	198.2	198.2	200.0	200.0	208.8	177.6	188.4	188.4	188.6	188.6	195.1	171.3						

Table 55. Gross cooling capacities — 17.5 ton high efficiency, dual fuel (continued)

CFM	Ent DB (° F)	Entering Wet Bulb Temp (°F)						Entering Wet Bulb Temp (°F)						Entering Wet Bulb Temp (°F)					
		61		67		73		61		67		73		61		67		73	
		MBh	SHC	MBh	SHC	MBh	SHC	MBh	SHC	MBh	SHC	MBh	SHC	MBh	SHC	MBh	SHC	MBh	SHC
7700	75	171.1	165.7	187.3	122.4	202.1	73.1	159.5	159.1	174.0	116.6	186.9	67.3						
	80	181.4	181.4	189.2	157.8	207.4	113.5	170.4	170.4	176.3	151.1	192.9	107.8						
	85	191.9	191.9	193.6	193.6	209.4	153.2	181.8	181.8	182.1	182.1	195.1	147.5						
	90	205.2	205.2	205.4	205.4	211.5	188.3	193.3	193.3	193.6	193.6	197.7	181.9						
8400	75	173.8	173.8	188.9	127.9	203.0	74.5	162.4	162.4	175.4	121.9	187.5	68.6						
	80	185.5	185.5	191.4	165.6	209.1	118.3	174.1	174.1	178.3	158.9	194.4	112.5						
	85	156.6	156.6	197.9	197.9	211.2	161.2	185.8	185.8	186.0	186.0	196.7	155.5						
	90	209.9	209.9	210.1	210.1	214.1	198.7	197.6	197.6	197.8	197.8	200.1	192.2						

Notes:

1. All capacities shown are gross and have not considered indoor fan heat. To obtain NET cooling capacity subtract indoor fan heat. For indoor fan heat formula, refer to appropriate airflow table notes.
2. MBh = Total gross capacity
3. SHC = Sensible heat capacity

Table 56. Gross cooling capacities — 20 ton high efficiency, dual fuel

CFM	Ent DB (° F)	Entering Wet Bulb Temp (°F)						Entering Wet Bulb Temp (°F)						Entering Wet Bulb Temp (°F)					
		61		67		73		61		67		73		61		67		73	
		MBh	SHC	MBh	SHC	MBh	SHC	MBh	SHC	MBh	SHC	MBh	SHC	MBh	SHC	MBh	SHC	MBh	SHC
		Ambient Temperature 85°F						Ambient Temperature 95°F						Ambient Temperature 105°F					
6000	75	220.7	177.3	246.6	138.5	272.3	97.8	208.9	170.9	233.7	132.1	257.0	91.1	196.3	164.2	219.9	125.4	242.3	84.8
	80	222.5	208.5	247.7	171.2	274.4	130.9	211.1	201.9	234.9	164.9	260.4	124.7	198.9	195.0	221.1	158.2	245.3	118.1
	85	230.8	230.8	248.7	203.9	274.7	163.4	220.9	220.9	236.1	197.6	260.9	157.3	210.2	210.2	222.3	189.3	246.8	151.1
	90	244.3	244.3	250.0	234.7	276.5	196.5	234.2	234.2	238.4	228.6	262.8	190.4	223.2	223.2	225.3	221.8	247.9	183.9
7200	75	228.9	194.8	254.9	150.0	279.8	101.1	216.7	188.0	241.3	143.5	264.6	94.8	203.6	180.7	226.7	136.7	248.3	88.0
	80	233.2	233.2	256.2	189.1	282.8	140.8	222.2	222.2	242.7	182.6	268.1	134.5	210.7	210.7	228.2	175.8	252.2	127.8
	85	247.3	247.3	257.2	225.8	284.2	180.1	236.5	236.5	244.9	219.5	269.6	173.8	224.7	224.7	230.0	212.0	252.9	166.8
	90	262.1	262.1	262.0	262.0	285.4	219.2	251.0	251.0	250.8	250.8	271.0	213.0	238.9	238.9	238.6	238.6	255.3	206.4
8000	75	233.7	206.8	259.1	157.3	283.6	103.2	221.2	199.8	245.2	150.8	268.0	96.1	207.7	192.4	230.1	143.9	251.2	90.0
	80	241.2	241.2	259.8	200.2	287.1	147.2	230.1	230.1	246.8	194.1	271.9	140.8	218.1	218.1	231.8	184.4	255.6	134.1
	85	256.4	256.4	262.5	241.0	288.5	190.6	245.1	245.1	249.1	234.2	273.5	184.3	232.7	232.7	235.6	227.4	257.4	177.6
	90	270.3	270.3	271.6	271.6	290.1	234.0	258.7	258.7	259.9	259.9	275.3	227.8	245.9	245.9	247.1	247.1	259.4	218.0
8800	75	237.8	218.4	262.6	164.4	296.3	108.8	225.1	211.4	248.3	157.8	270.7	98.7	211.5	203.8	232.9	150.9	253.4	91.9
	80	248.5	248.5	263.5	211.6	290.6	153.3	237.0	237.0	250.2	202.3	275.1	147.0	224.5	224.5	235.3	194.8	258.5	140.2
	85	264.4	264.4	267.3	255.9	292.1	200.9	252.6	252.6	253.9	249.1	276.9	194.6	239.7	239.7	239.6	239.6	260.4	187.9
	90	278.6	278.6	280.0	280.0	294.3	245.7	267.4	267.4	267.8	267.8	279.3	238.9	254.0	254.0	254.4	254.4	263.2	231.7
9600	75	241.7	229.9	265.6	171.4	288.1	106.7	228.8	222.7	250.9	164.8	272.8	100.6	215.1	215.1	235.2	157.8	254.9	93.6
	80	255.0	255.0	266.7	219.3	293.5	159.4	243.0	243.0	253.5	212.6	277.7	153.0	230.1	230.1	238.3	205.0	260.8	146.2
	85	271.4	271.4	272.0	270.6	295.3	211.2	259.1	259.1	258.7	258.7	279.7	204.8	244.1	244.1	246.1	246.1	263.0	198.1
	90	285.9	285.9	287.4	287.4	298.2	259.4	274.3	274.3	274.7	274.7	282.8	252.4	259.6	259.5	260.8	260.8	266.6	245.1
		Ambient Temperature 115°F						Ambient Temperature 125°F											
6000	75	182.7	155.2	205.0	118.4	225.6	77.8	168.4	147.2	189.0	111.0	207.7	70.5						
	80	186.1	186.1	206.3	151.2	229.1	111.2	173.8	173.8	190.4	143.8	211.7	104.0						
	85	198.5	198.5	207.8	181.9	230.7	144.2	185.9	185.9	192.3	174.1	213.3	137.0						
	90	211.3	211.3	211.2	211.2	231.8	177.0	198.3	198.3	198.2	198.2	214.6	169.8						
7200	75	189.6	173.0	211.0	129.5	230.7	80.9	174.7	164.8	194.1	121.9	211.1	73.2						
	80	198.4	198.4	211.8	165.8	235.2	120.9	185.0	185.0	196.0	157.9	216.9	113.5						
	85	212.0	212.0	215.0	204.5	236.9	160.2	198.2	198.2	199.7	196.8	218.8	152.9						
	90	225.8	225.8	225.5	225.5	238.6	196.7	211.6	211.6	211.2	211.2	220.9	188.7						
8000	75	193.5	184.5	214.0	136.6	233.0	82.8	178.4	176.2	196.6	129.0	213.3	75.3						
	80	205.2	205.2	215.4	176.3	238.2	127.1	191.1	191.1	199.3	168.3	219.4	119.7						
	85	219.4	219.4	220.5	219.7	240.2	170.6	204.9	204.9	205.2	205.2	221.6	163.3						
	90	233.8	233.8	233.3	233.3	242.6	210.4	218.8	218.8	218.3	218.3	223.6	202.0						
8800	75	197.1	195.9	216.4	143.6	233.7	84.3	182.2	182.2	198.5	135.9	214.2	77.0						
	80	211.0	211.0	218.5	186.5	240.6	133.1	196.4	196.4	202.2	178.4	221.4	125.7						
	85	225.8	225.8	225.3	225.3	242.8	180.9	210.7	210.7	210.2	210.2	224.0	168.6						
	90	240.7	240.7	240.0	240.0	246.0	224.0	225.1	225.1	224.4	224.4	226.8	215.4						

Table 56. Gross cooling capacities — 20 ton high efficiency, dual fuel (continued)

CFM	Ent DB (° F)	Entering Wet Bulb Temp (°F)						Entering Wet Bulb Temp (°F)						Entering Wet Bulb Temp (°F)					
		61		67		73		61		67		73		61		67		73	
		MBh	SHC	MBh	SHC	MBh	SHC	MBh	SHC	MBh	SHC	MBh	SHC	MBh	SHC	MBh	SHC	MBh	SHC
9600	75	201.0	201.0	218.3	150.4	234.7	86.0	186.5	186.5	200.1	142.6	214.1	78.3						
	80	216.1	216.1	222.0	197.0	242.6	139.1	201.0	201.0	204.7	188.3	223.0	131.6						
	85	230.5	230.5	230.8	230.8	244.0	185.6	215.7	215.7	216.0	216.0	226.2	177.5						
	90	246.7	246.7	245.9	245.9	249.3	237.3	230.5	230.5	229.7	229.7	230.0	228.6						

Notes:

1. All capacities shown are gross and have not considered indoor fan heat. To obtain NET cooling capacity subtract indoor fan heat. For indoor fan heat formula, refer to appropriate airflow table notes.
2. MBh = Total gross capacity
3. SHC = Sensible heat capacity

Table 57. Gross cooling capacities — 25 ton high efficiency, dual fuel

CFM	Ent DB (° F)	Entering Wet Bulb Temp (°F)						Entering Wet Bulb Temp (°F)						Entering Wet Bulb Temp (°F)					
		61		67		73		61		67		73		61		67		73	
		MBh	SHC	MBh	SHC	MBh	SHC	MBh	SHC	MBh	SHC	MBh	SHC	MBh	SHC	MBh	SHC	MBh	SHC
		Ambient Temperature 85°F						Ambient Temperature 95°F						Ambient Temperature 105°F					
7500	75	247.0	202.5	274.6	156.4	304.5	109.0	233.9	195.5	260.2	149.4	288.6	102.1	219.9	188.1	244.8	142.1	271.7	94.8
	80	249.6	240.2	275.3	194.5	304.8	147.3	237.1	233.1	261.0	187.6	289.1	140.4	223.8	223.8	245.6	180.2	272.3	133.2
	85	260.7	260.7	276.1	232.6	305.4	185.6	249.4	249.4	262.1	225.7	289.8	178.7	237.2	237.2	247.0	218.5	273.1	171.5
	90	275.3	275.3	279.2	270.2	306.0	223.7	263.7	263.7	265.8	263.3	290.5	216.9	251.1	251.1	251.7	251.7	273.8	209.7
9000	75	255.2	223.3	282.4	168.5	312.3	112.5	241.5	216.2	267.4	161.4	295.7	105.6	227.0	208.7	251.3	154.0	278.0	98.2
	80	261.2	261.2	283.2	213.5	312.8	157.8	249.4	249.4	268.2	206.4	296.4	150.9	236.5	236.5	252.2	199.0	278.9	143.6
	85	276.8	276.8	285.2	258.8	313.5	203.0	264.5	264.5	270.7	251.9	297.2	196.0	251.3	251.3	255.2	242.9	279.8	188.8
	90	292.5	292.5	292.6	292.6	314.2	248.0	279.9	279.9	280.3	280.3	298.2	241.1	266.2	266.2	266.6	266.6	281.0	234.0
10000	75	259.7	236.7	286.5	176.2	316.3	114.7	245.9	228.0	271.1	169.1	299.2	107.7	231.2	220.2	254.7	161.6	281.2	100.3
	80	269.5	269.5	287.3	225.6	316.9	164.5	257.0	257.0	272.0	218.5	300.1	157.5	243.6	243.6	255.8	211.1	282.2	150.2
	85	285.6	285.6	290.5	274.1	317.7	214.1	272.8	272.8	275.8	266.9	301.0	207.1	258.9	258.9	260.3	259.3	283.2	199.8
	90	301.9	301.9	302.3	302.3	318.9	263.6	288.7	288.7	289.1	289.1	302.5	256.8	274.4	274.4	274.7	274.7	285.0	249.6
11000	75	263.9	247.9	289.9	183.6	319.6	116.8	249.9	240.5	274.2	176.4	302.2	110.3	235.1	232.6	257.5	168.9	283.8	102.3
	80	276.5	276.5	290.9	237.4	320.4	170.9	263.6	263.6	275.5	230.3	303.3	163.9	249.7	249.7	259.0	222.8	285.1	156.5
	85	293.2	293.2	295.5	290.1	321.2	224.8	279.9	279.9	280.9	280.9	304.2	217.8	265.5	265.5	265.6	265.6	286.1	210.5
	90	310.0	310.0	310.4	310.4	323.0	278.9	296.3	296.3	296.6	296.6	306.4	272.0	281.5	281.5	281.8	281.8	288.7	264.8
12000	75	267.8	260.1	292.8	190.7	322.4	119.6	253.8	252.6	276.9	183.5	304.8	111.7	239.0	239.0	259.9	175.9	286.1	104.3
	80	282.7	282.7	294.2	248.8	323.3	177.1	269.4	269.4	278.5	241.7	305.9	170.1	255.0	255.0	261.9	234.2	287.5	162.7
	85	299.8	299.8	300.5	300.5	324.2	235.2	286.0	286.0	286.0	286.0	306.9	228.2	271.2	271.2	271.5	271.5	288.5	220.8
	90	317.1	317.1	317.5	317.5	326.7	293.7	302.9	302.9	303.2	303.2	309.9	286.8	287.6	287.6	285.3	285.3	292.2	277.0
		Ambient Temperature 115°F						Ambient Temperature 125°F											
7500	75	204.8	180.2	228.3	134.4	253.7	87.3	188.7	172.0	210.7	126.2	234.3	79.3						
	80	210.5	210.5	229.2	172.5	254.4	125.7	196.5	196.5	211.6	164.4	235.4	117.8						
	85	223.9	223.9	230.8	210.9	255.3	164.0	209.6	209.6	213.7	201.4	236.3	156.2						
	90	237.5	237.5	237.9	237.9	256.2	202.2	222.8	222.8	223.1	223.1	237.3	194.4						
9000	75	211.5	199.2	234.2	146.2	259.1	90.8	195.2	190.6	215.9	138.0	239.0	82.6						
	80	222.6	222.6	235.2	191.3	260.3	136.0	207.6	207.6	217.1	183.1	240.5	128.1						
	85	237.0	237.0	238.8	235.0	261.3	181.2	221.5	221.5	221.8	221.8	241.5	173.3						
	90	251.5	251.5	251.8	251.8	262.8	226.5	235.6	235.6	235.9	235.9	243.4	218.6						
10000	75	215.6	212.0	237.2	153.7	261.9	92.7	199.3	199.3	218.5	145.5	241.5	84.6						
	80	229.1	229.1	238.5	203.3	263.3	142.5	213.6	213.6	220.2	195.2	243.2	134.6						
	85	244.0	244.0	244.2	244.2	264.3	192.2	228.0	228.0	228.2	228.2	244.2	184.2						
	90	259.1	259.1	259.4	259.4	266.6	242.1	242.5	242.5	242.8	242.8	247.1	231.8						
11000	75	219.6	219.6	239.7	161.0	264.3	94.6	204.0	204.0	220.7	152.7	243.6	86.6						
	80	234.8	234.8	241.5	215.0	265.9	148.9	218.7	218.7	223.0	204.4	245.4	140.9						
	85	250.1	250.1	250.3	250.3	266.9	202.8	233.5	233.5	233.7	233.7	246.6	194.9						
	90	265.5	265.5	265.9	265.9	270.1	254.8	248.4	248.4	248.7	248.7	250.6	246.4						
12000	75	224.1	224.1	241.8	168.0	266.3	96.5	208.1	208.1	222.6	159.7	245.3	88.5						
	80	239.6	239.6	244.2	223.9	268.0	155.0	223.1	223.1	225.6	215.2	247.3	147.0						
	85	255.3	255.3	255.6	255.6	269.2	213.2	238.2	238.2	238.5	238.5	248.7	205.2						
	90	271.2	271.2	271.4	271.4	273.5	269.0	253.5	253.5	253.7	253.7	254.1	254.1						

Table 57. Gross cooling capacities — 25 ton high efficiency, dual fuel (continued)

CFM	Ent DB (° F)	Entering Wet Bulb Temp (°F)						Entering Wet Bulb Temp (°F)						Entering Wet Bulb Temp (°F)					
		61		67		73		61		67		73		61		67		73	
		MBh	SHC	MBh	SHC	MBh	SHC	MBh	SHC	MBh	SHC	MBh	SHC	MBh	SHC	MBh	SHC	MBh	SHC

Notes:

1. All capacities shown are gross and have not considered indoor fan heat. To obtain NET cooling capacity subtract indoor fan heat. For indoor fan heat formula, refer to appropriate airflow table notes.
2. MBh = Total gross capacity
3. SHC = Sensible heat capacity

Heating Capacities

Table 58. Heating capacities — 3 tons standard efficiency

Outdoor Temp (°F)	Integrated Heating Capacity (MBh) at Indicated Dry Bulb Temp (°F)						Total Power (kW) at Indicated Dry Bulb Temp (°F)					
	40	50	60	70	75	80	40	50	60	70	75	80
-8	11.6	9.8	7.9	6.2	5.4	4.5	1.8	2.0	2.1	2.3	2.4	2.6
-3	13.2	11.4	9.6	8.2	7.5	6.8	1.8	2.0	2.1	2.3	2.5	2.6
2	14.8	13.1	11.6	10.3	9.7	9.0	1.8	2.0	2.1	2.4	2.5	2.6
7	16.6	14.9	13.6	12.4	11.8	11.2	1.8	2.0	2.2	2.4	2.5	2.6
12	17.8	16.9	15.7	14.5	14.0	13.4	1.9	2.0	2.2	2.4	2.5	2.6
17	19.9	18.6	17.5	16.3	15.8	15.2	1.9	2.0	2.2	2.4	2.5	2.7
22	22.1	20.9	19.8	18.7	18.2	17.7	1.9	2.0	2.2	2.4	2.6	2.7
27	24.6	23.4	22.3	21.2	20.7	20.2	1.9	2.1	2.2	2.5	2.6	2.7
32	27.2	26	25.0	23.9	23.3	22.8	1.9	2.1	2.3	2.5	2.6	2.8
37	29.2	28.1	27.0	26.0	25.5	24.9	1.9	2.1	2.3	2.5	2.7	2.8
42	31.9	30.8	29.7	28.7	28.1	27.6	2.0	2.1	2.3	2.6	2.7	2.8
47	34.3	33.2	32.1	31.0	30.4	29.9	2.0	2.2	2.4	2.6	2.7	2.9
52	37.4	36.1	35.0	33.9	33.3	32.8	2.0	2.2	2.4	2.6	2.8	2.9
57	40	38.7	37.6	36.4	35.8	35.2	2.0	2.2	2.4	2.7	2.8	3.0
62	43.4	42	40.8	39.5	38.9	38.3	2.1	2.3	2.5	2.7	2.9	3.0
67	45.6	44.1	42.8	41.5	40.9	40.2	2.1	2.3	2.5	2.8	2.9	3.0
72	47.1	45.6	44.3	42.9	42.2	41.6	2.1	2.3	2.5	2.8	2.9	3.1

Notes:

1. For other airflow conditions, see heating capacity correction factor Net Heating Capacity and Power Input include indoor fan heat at nominal CFM and 0.50 inch ESP. To obtain net heating at other conditions, subtract fan heat at this condition and add fan heat at new condition.
2. Heating capacities and powers are integrated to include the effects of defrost in the frost region.
3. All heating capacities and power (kW) are at 70% OD relative humidity.

Table 59. Heating capacities — 4 tons standard efficiency

Outdoor Temp (°F)	Integrated Heating Capacity (MBh) at Indicated Dry Bulb Temp (°F)						Total Power (kW) at Indicated Dry Bulb Temp (°F)					
	40	50	60	70	75	80	40	50	60	70	75	80
-8	16.1	14.1	12.6	11.5	10.9	10.4	2.4	2.6	2.8	3.1	3.3	3.5
-3	18.1	16.4	15.1	14.0	13.5	13.0	2.4	2.6	2.9	3.2	3.3	3.5
2	20.5	18.9	17.6	16.5	16.1	15.6	2.5	2.7	2.9	3.2	3.4	3.6
7	22.9	21.4	20.2	18.9	19.2	18.4	2.5	2.7	2.9	3.2	3.4	3.6
12	25.3	23.9	22.8	21.9	21.4	21.0	2.6	2.7	3.0	3.3	3.5	3.7
17	27.9	26.5	25.4	24.3	23.9	23.5	2.6	2.8	3.0	3.3	3.5	3.7
22	31	29.6	28.4	27.4	26.9	26.5	2.6	2.8	3.1	3.4	3.6	3.7
27	34.2	32.9	31.7	30.7	30.2	29.7	2.7	2.9	3.1	3.4	3.6	3.8
32	37.6	36.3	35.1	34.0	33.5	33.0	2.7	2.9	3.2	3.5	3.7	3.8
37	40.3	39	37.8	36.7	36.2	35.7	2.7	2.9	3.2	3.5	3.7	3.9
42	43.8	42.5	41.3	40.1	39.6	39.0	2.8	3.0	3.2	3.6	3.7	3.9
47	46.8	45.4	44.2	43.0	42.4	41.8	2.8	3.0	3.3	3.6	3.8	4.0
52	50.6	49.2	47.9	46.7	46.0	45.4	2.8	3.0	3.3	3.7	3.8	4.0

Table 59. Heating capacities — 4 tons standard efficiency (continued)

Outdoor Temp (°F)	Integrated Heating Capacity (MBh) at Indicated Dry Bulb Temp (°F)						Total Power (kW) at Indicated Dry Bulb Temp (°F)					
	40	50	60	70	75	80	40	50	60	70	75	80
57	53.8	52.3	51.0	49.7	49.0	48.3	2.8	3.1	3.4	3.7	3.9	4.1
62	57.9	56.3	54.9	53.4	52.7	51.9	2.9	3.1	3.4	3.8	3.9	4.1
67	60.5	58.8	57.3	55.8	55.0	54.2	2.9	3.1	3.4	3.8	4.0	4.2
72	62.3	60.6	59.0	57.4	56.6	55.8	2.9	3.2	3.5	3.8	4.0	4.2

Notes:

1. For other airflow conditions, see heating capacity correction factor Net Heating Capacity and Power Input include indoor fan heat at nominal CFM and 0.50 inch ESP. To obtain net heating at other conditions, subtract fan heat at this condition and add fan heat at new condition.
2. Heating capacities and powers are integrated to include the effects of defrost in the frost region.
3. All heating capacities and power (kW) are at 70% OD relative humidity.

Table 60. Heating capacities — 5 tons standard efficiency

Outdoor Temp (°F)	Integrated Heating Capacity (MBh) at Indicated Dry Bulb Temp (°F)						Total Power (kW) at Indicated Dry Bulb Temp (°F)					
	40	50	60	70	75	80	40	50	60	70	75	80
-8	17.6	17.3	16.8	16.2	15.8	15.4	2.8	3.1	3.4	3.7	4.0	4.2
-3	20	19.7	19.3	18.6	18.2	17.8	2.9	3.1	3.4	3.8	4.0	4.2
2	22.7	22.4	21.9	21.2	20.8	20.4	2.9	3.2	3.5	3.8	4.1	4.3
7	25.6	25.2	24.6	23.9	23.5	23.1	3.0	3.2	3.5	3.9	4.1	4.3
12	28.2	27.8	27.2	26.6	26.2	25.9	3.0	3.3	3.6	3.9	4.1	4.4
17	31.4	30.9	30.3	29.5	29.1	28.8	3.1	3.3	3.6	4.0	4.2	4.4
22	35.1	34.5	33.8	33.0	32.6	32.2	3.1	3.4	3.7	4.0	4.2	4.5
27	39	38.3	37.5	36.6	36.2	35.8	3.1	3.4	3.7	4.1	4.3	4.5
32	43.1	42.3	41.5	40.6	40.1	39.6	3.2	3.4	3.8	4.1	4.3	4.6
37	46.4	45.5	44.6	43.7	43.2	42.7	3.2	3.5	3.8	4.2	4.4	4.6
42	50.6	49.7	48.7	47.6	47.1	46.6	3.2	3.5	3.8	4.2	4.4	4.7
47	54.3	53.2	52.1	51.0	50.4	49.9	3.2	3.5	3.9	4.3	4.5	4.7
52	58.9	57.7	56.5	55.3	54.7	54.1	3.3	3.6	3.9	4.3	4.6	4.8
57	62.8	61.4	60.2	58.9	58.2	57.6	3.3	3.6	4.0	4.4	4.6	4.8
62	67.7	66.2	64.7	63.3	62.6	61.9	3.4	3.7	4.0	4.5	4.7	4.9
67	70.8	69.1	67.6	66.1	65.3	64.6	3.4	3.7	4.1	4.5	4.7	5.0
72	72.9	71.2	69.6	68.0	67.2	66.4	3.4	3.7	4.1	4.5	4.8	5.0

Notes:

1. For other airflow conditions, see heating capacity correction factor Net Heating Capacity and Power Input include indoor fan heat at nominal CFM and 0.50 inch ESP. To obtain net heating at other conditions, subtract fan heat at this condition and add fan heat at new condition.
2. Heating capacities and powers are integrated to include the effects of defrost in the frost region.
3. All heating capacities and power (kW) are at 70% OD relative humidity.

Table 61. Heating capacities — 3 tons high efficiency

Outdoor Temp (°F)	Integrated Heating Capacity (MBh) at Indicated Dry Bulb Temp (°F)						Total Power (kW) at Indicated Dry Bulb Temp (°F)					
	40	50	60	70	75	80	40	50	60	70	75	80
-8	11.5	10.6	9.9	9.2	8.9	8.6	1.6	1.8	1.9	2.1	2.2	2.3
-3	13.4	12.5	11.7	11.0	10.7	10.4	1.6	1.8	2.0	2.1	2.3	2.4
2	15.4	14.4	13.6	12.9	12.5	12.2	1.7	1.8	2.0	2.2	2.3	2.4
7	17.5	16.5	15.6	14.8	14.5	14.1	1.7	1.8	2.0	2.2	2.3	2.4
12	19.5	18.5	17.6	16.8	16.4	16.0	1.7	1.9	2.0	2.2	2.4	2.5

Table 61. Heating capacities — 3 tons high efficiency (continued)

Outdoor Temp (°F)	Integrated Heating Capacity (MBh) at Indicated Dry Bulb Temp (°F)						Total Power (kW) at Indicated Dry Bulb Temp (°F)					
	40	50	60	70	75	80	40	50	60	70	75	80
17	21.5	20.5	19.6	18.7	18.3	18.0	1.7	1.9	2.1	2.3	2.4	2.5
22	23.8	22.8	21.8	20.9	20.4	20.0	1.8	1.9	2.1	2.3	2.4	2.6
27	26.4	25.2	24.2	23.2	22.7	22.3	1.8	1.9	2.1	2.4	2.5	2.6
32	29	27.8	26.7	25.7	25.2	24.7	1.8	2.0	2.2	2.4	2.5	2.6
37	31.2	29.9	28.8	27.7	27.1	26.6	1.8	2.0	2.2	2.4	2.5	2.7
42	33.9	32.6	31.4	30.2	29.6	29.1	1.9	2.0	2.2	2.5	2.6	2.7
47	36.3	34.9	33.6	32.4	31.8	31.2	1.9	2.1	2.3	2.5	2.6	2.8
52	39.3	37.8	36.5	35.2	34.5	33.9	1.9	2.1	2.3	2.5	2.7	2.8
57	41.9	40.3	39.0	37.6	36.9	36.2	2.0	2.1	2.4	2.6	2.7	2.8
62	45.1	43.5	42.0	40.5	39.8	39.1	2.0	2.2	2.4	2.6	2.8	2.9
67	47.3	45.6	44.0	42.5	41.7	41.0	2.0	2.2	2.4	2.7	2.8	2.9
72	49.1	47.5	46.0	44.6	43.9	43.1	2.1	2.3	2.5	2.7	2.9	3.0

Notes:

1. For other airflow conditions, see heating capacity correction factor Net Heating Capacity and Power Input include indoor fan heat at nominal CFM and 0.50 inch ESP. To obtain net heating at other conditions, subtract fan heat at this condition and add fan heat at new condition.
2. Heating capacities and powers are integrated to include the effects of defrost in the frost region.
3. All heating capacities and power (kW) are at 70% OD relative humidity.

Table 62. Heating capacities — 4 tons high efficiency

Outdoor Temp (°F)	Integrated Heating Capacity (MBh) at Indicated Dry Bulb Temp (°F)						Total Power (kW) at Indicated Dry Bulb Temp (°F)					
	40	50	60	70	75	80	40	50	60	70	75	80
-8	15.3	14.4	13.5	12.7	12.3	12.0	2.5	2.5	2.7	2.9	3.0	3.1
-3	17.6	16.7	15.8	15.0	14.7	14.3	2.5	2.6	2.7	2.9	3.0	3.2
2	20.0	19.1	18.2	17.4	17.0	16.6	2.5	2.6	2.7	2.9	3.1	3.2
7	22.7	21.7	20.7	19.9	19.5	19.1	2.5	2.6	2.8	3.0	3.1	3.3
12	25.2	24.2	23.2	22.4	21.9	21.6	2.5	2.6	2.8	3.0	3.2	3.3
17	27.7	26.7	25.7	24.8	24.4	23.9	2.5	2.7	2.8	3.1	3.2	3.4
22	30.8	29.7	28.7	27.7	27.3	26.8	2.5	2.7	2.9	3.1	3.3	3.4
27	34.1	33.0	31.8	30.8	30.3	29.8	2.6	2.7	2.9	3.2	3.3	3.5
32	37.6	36.4	35.2	34.1	33.5	33.0	2.6	2.7	3.0	3.2	3.4	3.5
37	40.5	39.2	37.9	36.7	36.2	35.6	2.6	2.8	3.0	3.3	3.4	3.6
42	44.1	42.7	41.4	40.1	39.5	38.9	2.6	2.8	3.0	3.3	3.5	3.6
47	47.3	45.8	44.3	43.0	42.3	41.7	2.7	2.8	3.1	3.4	3.5	3.7
52	51.3	49.6	48.1	46.7	46.0	45.3	2.7	2.9	3.1	3.4	3.6	3.8
57	54.8	53.0	51.4	49.8	49.1	48.3	2.7	2.9	3.2	3.5	3.7	3.8
62	59.0	57.1	55.5	53.8	53.0	52.2	2.8	3.0	3.3	3.6	3.7	3.9
67	61.8	59.9	58.1	56.3	55.5	54.6	2.8	3.0	3.3	3.6	3.8	4.0
72	63.9	61.9	60.0	58.2	57.3	56.4	2.9	3.1	3.3	3.7	3.8	4.0

Notes:

1. For other airflow conditions, see heating capacity correction factor Net Heating Capacity and Power Input include indoor fan heat at nominal CFM and 0.50 inch ESP. To obtain net heating at other conditions, subtract fan heat at this condition and add fan heat at new condition.
2. Heating capacities and powers are integrated to include the effects of defrost in the frost region.
3. All heating capacities and power (kW) are at 70% OD relative humidity.

Table 63. Heating capacities — 5 tons high efficiency

Outdoor Temp (°F)	Integrated Heating Capacity (MBh) at Indicated Dry Bulb Temp (°F)						Total Power (kW) at Indicated Dry Bulb Temp (°F)					
	40	50	60	70	75	80	40	50	60	70	75	80
-8	20.4	20.1	19.7	19.4	19.4	19.3	3.0	3.1	3.3	3.5	3.6	3.7
-3	23.2	22.7	22.2	21.8	21.6	21.5	3.0	3.2	3.4	3.6	3.7	3.8
2	26	25.4	24.8	24.2	24.0	23.8	3.0	3.2	3.4	3.6	3.8	3.9
7	28.9	28.2	27.5	26.7	26.3	25.8	3.0	3.2	3.4	3.7	3.8	4.0
12	31.7	30.9	30.1	29.3	28.9	28.6	3.0	3.2	3.5	3.8	3.9	4.1
17	35.2	34.3	33.3	32.4	31.9	31.6	3.0	3.3	3.5	3.8	4.0	4.2
22	38.9	37.9	36.8	35.7	35.2	34.7	3.0	3.3	3.6	3.9	4.1	4.2
27	42.8	41.7	40.4	39.2	38.7	38.1	3.0	3.3	3.6	3.9	4.1	4.3
32	47	45.7	44.3	43.0	42.4	41.8	3.1	3.4	3.7	4.0	4.2	4.4
37	50.4	49.1	47.6	46.1	45.4	44.8	3.1	3.4	3.7	4.1	4.3	4.5
42	54.7	53.3	51.7	50.1	49.3	48.6	3.1	3.4	3.8	4.1	4.3	4.5
47	58.4	56.9	55.2	53.5	52.7	51.9	3.2	3.5	3.8	4.2	4.4	4.6
52	63.2	61.4	59.6	57.9	57.0	56.1	3.3	3.5	3.9	4.3	4.5	4.7
57	67.3	65.4	63.5	61.6	60.7	59.8	3.3	3.6	4.0	4.3	4.5	4.8
62	72.5	70.4	68.4	66.3	65.3	64.3	3.4	3.7	4.0	4.4	4.6	4.9
67	75.8	73.7	71.5	69.4	68.3	67.3	3.5	3.8	4.1	4.5	4.7	4.9
72	78.3	76.1	73.8	71.6	70.5	69.4	3.5	3.8	4.1	4.5	4.8	5.0

Notes:

1. For other airflow conditions, see heating capacity correction factor Net Heating Capacity and Power Input include indoor fan heat at nominal CFM and 0.50 inch ESP. To obtain net heating at other conditions, subtract fan heat at this condition and add fan heat at new condition.
2. Heating capacities and powers are integrated to include the effects of defrost in the frost region.
3. All heating capacities and power (kW) are at 70% OD relative humidity.

Table 64. Heating capacities — 6 tons

Outdoor Temp (°F)	Integrated Heating Capacity (MBh) at Indicated Dry Bulb Temp (°F)						Total Power (kW) at Indicated Dry Bulb Temp (°F)					
	40	50	60	70	75	80	40	50	60	70	75	80
-8	23.9	21.2	19.5	18.2	17.6	17.1	3.9	4.2	4.6	5.1	5.3	5.6
-3	27.2	25.1	23.4	22.1	21.5	21.0	4.0	4.3	4.7	5.1	5.4	5.7
2	31.1	29.0	27.4	26.1	25.5	25.0	4.1	4.4	4.8	5.2	5.5	5.8
7	35.2	33.1	31.1	30.4	29.8	29.2	4.1	4.5	4.8	5.3	5.6	5.8
12	39.4	37.5	35.9	34.6	34.0	33.4	4.2	4.5	4.9	5.4	5.6	5.9
17	43.9	42.0	40.3	38.9	38.3	37.8	4.2	4.6	5.0	5.4	5.7	6.0
22	48.6	46.6	44.9	43.5	42.8	42.2	4.3	4.6	5.0	5.5	5.8	6.1
27	53.6	51.7	49.9	48.4	47.6	47.0	4.3	4.7	5.1	5.6	5.9	6.1
32	59.2	57.1	55.3	53.6	52.8	52.1	4.4	4.8	5.2	5.7	5.9	6.2
37	63.7	61.7	59.7	58.0	57.2	56.4	4.4	4.8	5.2	5.7	6.0	6.3
42	69.3	67.2	65.1	63.2	62.3	61.4	4.5	4.9	5.3	5.8	6.1	6.4
47	74.4	72.2	70.0	68.0	67.0	66.1	4.5	4.9	5.3	5.9	6.1	6.4
52	80.6	78.1	75.8	73.7	72.6	71.5	4.6	5.0	5.4	5.9	6.2	6.5
57	86.0	83.3	80.9	78.6	77.4	76.2	4.6	5.0	5.5	6.0	6.3	6.6
62	92.9	90.1	87.4	84.8	83.5	82.2	4.7	5.1	5.6	6.1	6.4	6.7
67	97.8	94.8	92.0	89.2	87.8	86.4	4.7	5.2	5.7	6.2	6.5	6.8

Table 64. Heating capacities — 6 tons (continued)

Outdoor Temp (°F)	Integrated Heating Capacity (MBh) at Indicated Dry Bulb Temp (°F)						Total Power (kW) at Indicated Dry Bulb Temp (°F)					
	40	50	60	70	75	80	40	50	60	70	75	80
72	102.1	99.1	96.2	93.2	91.8	90.4	4.8	5.2	5.7	6.3	6.6	6.9

Notes:

1. For other airflow conditions, see heating capacity correction factor Net Heating Capacity and Power Input include indoor fan heat at nominal CFM and 0.25 inch ESP. To obtain net heating at other conditions, subtract fan heat at this condition and add fan heat at new condition.
2. Heating capacities and powers are integrated to include the effects of defrost in the frost region.
3. All heating capacities and power (kW) are at 70% OD relative humidity.

Table 65. Heating capacities — 7.5 tons

Outdoor Temp (°F)	Integrated Heating Capacity (MBh) at Indicated Dry Bulb Temp (°F)						Total Power (kW) at Indicated Dry Bulb Temp (°F)					
	40	50	60	70	75	80	40	50	60	70	75	80
-8	27.6	26.9	26.2	25.5	25.0	24.6	4.8	5.2	5.7	6.2	6.5	6.9
-3	31.8	31.1	30.3	29.5	29.0	28.6	4.9	5.3	5.7	6.3	6.6	6.9
2	36.3	35.5	34.6	33.7	33.3	32.8	4.9	5.3	5.8	6.3	6.7	7.0
7	41.0	40.1	38.8	38.4	37.8	37.3	5.0	5.4	5.8	6.4	6.7	7.1
12	46.1	45.0	44.0	42.9	42.4	41.9	5.0	5.4	5.9	6.5	6.8	7.1
17	51.3	50.2	49.0	47.8	47.3	46.7	5.1	5.5	6.0	6.5	6.9	7.2
22	56.9	55.5	54.2	52.9	52.3	51.7	5.1	5.6	6.0	6.6	6.9	7.3
27	62.9	61.4	60.0	58.5	57.8	57.1	5.2	5.6	6.1	6.7	7.0	7.4
32	69.5	67.9	66.2	64.5	63.7	62.9	5.2	5.7	6.2	6.8	7.1	7.5
37	75.0	73.1	71.3	69.5	68.7	67.8	5.3	5.7	6.2	6.8	7.2	7.5
42	81.6	79.6	77.5	75.6	74.6	73.7	5.3	5.8	6.3	6.9	7.2	7.6
47	87.6	85.3	83.1	81.0	80.0	79.0	5.4	5.8	6.4	7.0	7.3	7.7
52	94.8	92.2	89.8	87.5	86.3	85.2	5.4	5.9	6.4	7.1	7.4	7.8
57	101.2	98.4	95.8	93.3	92.1	90.8	5.5	6.0	6.5	7.2	7.5	7.9
62	109.6	106.5	103.3	100.5	99.1	97.9	5.6	6.1	6.7	7.3	7.7	8.0
67	114.9	111.9	108.7	105.4	103.9	102.4	5.6	6.2	6.7	7.4	7.7	8.1
72	120.3	116.7	113.5	110.0	108.5	107.3	5.7	6.2	6.8	7.5	7.8	8.2

Notes:

1. For other airflow conditions, see heating capacity correction factor Net Heating Capacity and Power Input include indoor fan heat at nominal CFM and 0.25 inch ESP. To obtain net heating at other conditions, subtract fan heat at this condition and add fan heat at new condition.
2. Heating capacities and powers are integrated to include the effects of defrost in the frost region.
3. All heating capacities and power (kW) are at 70% OD relative humidity.

Table 66. Heating capacities — 8.5 tons

Outdoor Temp (°F)	Integrated Heating Capacity (MBh) at Indicated Dry Bulb Temp (°F)						Total Power (kW) at Indicated Dry Bulb Temp (°F)					
	40	50	60	70	75	80	40	50	60	70	75	80
-8	36.1	35.2	34.2	33.1	32.5	31.9	5.4	5.9	6.5	7.1	7.5	7.8
-3	41.2	40.1	39.1	38.0	37.4	36.8	5.4	6.0	6.6	7.2	7.6	7.9
2	46.3	45.3	44.2	43.0	42.4	41.9	5.5	6.0	6.6	7.3	7.7	8.0
7	51.8	50.5	49.4	48.1	47.5	46.9	5.6	6.1	6.7	7.4	7.8	8.2
12	57.2	56.0	54.8	53.5	52.9	52.3	5.7	6.2	6.8	7.5	7.9	8.3
17	62.8	61.4	60.0	58.6	57.9	57.3	5.7	6.3	6.9	7.6	8.0	8.4
22	69.4	67.8	66.3	64.8	64.1	63.4	5.8	6.4	7.0	7.7	8.1	8.5
27	76.5	74.7	73.0	71.4	70.6	69.8	5.9	6.5	7.2	7.9	8.3	8.7
32	84.1	82.0	80.1	78.3	77.4	76.5	6.0	6.6	7.3	8.0	8.4	8.8
37	90.2	87.9	85.8	83.8	82.9	82.0	6.1	6.7	7.4	8.1	8.5	8.9
42	97.9	95.4	93.1	90.9	89.9	88.9	6.2	6.8	7.5	8.2	8.7	9.1
47	104.5	101.8	99.3	97.0	95.9	94.8	6.3	6.9	7.6	8.4	8.8	9.2

Table 66. Heating capacities — 8.5 tons (continued)

Outdoor Temp (°F)	Integrated Heating Capacity (MBh) at Indicated Dry Bulb Temp (°F)						Total Power (kW) at Indicated Dry Bulb Temp (°F)					
	40	50	60	70	75	80	40	50	60	70	75	80
52	113.1	110.1	107.3	104.7	103.5	102.3	6.4	7.0	7.7	8.5	8.9	9.4
57	120.4	117.1	114.2	111.3	110.0	108.7	6.5	7.2	7.9	8.6	9.1	9.5
62	129.5	125.8	122.6	119.6	118.1	116.7	6.7	7.3	8.0	8.8	9.2	9.7
67	135.4	131.5	128.0	124.8	123.2	121.7	6.8	7.4	8.1	8.9	9.3	9.8
72	139.5	135.5	131.9	128.5	126.9	125.3	6.8	7.5	8.2	9.0	9.4	9.9

Notes:

1. For other airflow conditions, see heating capacity correction factor Net Heating Capacity and Power Input include indoor fan heat at nominal CFM and 0.25 inch ESP. To obtain net heating at other conditions, subtract fan heat at this condition and add fan heat at new condition.
2. Heating capacities and powers are integrated to include the effects of defrost in the frost region.
3. All heating capacities and power (kW) are at 70% OD relative humidity.

Table 67. Heating capacities — 10 tons (WSK* only)

Outdoor Temp (°F)	Integrated Heating Capacity (MBh) at Indicated Dry Bulb Temp (°F)						Total Power (kW) at Indicated Dry Bulb Temp (°F)					
	40	50	60	70	75	80	40	50	60	70	75	80
-8	38.0	37.3	36.5	35.7	35.4	35.1	7.8	8.6	9.3	10.2	10.7	11.3
-3	43.5	42.6	41.5	40.9	40.5	40.2	8.0	8.7	9.5	10.4	10.9	11.4
2	49.1	48.2	47.2	46.2	45.8	45.3	8.1	8.8	9.6	10.5	11.0	11.6
7	55.1	54.0	52.9	51.8	51.2	50.7	8.2	9.0	9.8	10.7	11.2	11.7
12	61.3	60.1	58.8	57.6	57.0	56.5	8.3	9.1	9.9	10.8	11.4	11.9
17	67.6	66.3	64.9	63.6	63.0	62.3	8.5	9.2	10.1	11.0	11.5	12.1
22	74.5	73.0	71.5	69.9	69.2	68.5	8.6	9.4	10.2	11.2	11.7	12.3
27	81.4	79.8	78.1	76.4	75.6	74.8	8.7	9.5	10.4	11.3	11.9	12.4
32	88.7	87.0	85.0	83.2	82.3	81.5	8.8	9.6	10.5	11.5	12.1	12.6
37	95.9	93.9	91.8	89.8	88.8	87.9	8.9	9.8	10.7	11.7	12.2	12.8
42	103.3	101.1	98.8	96.6	95.5	94.5	9.0	9.9	10.8	11.9	12.4	13.0
47	110.7	108.3	105.8	103.4	102.3	101.1	9.1	10.0	11.0	12.0	12.6	13.2
52	118.5	115.7	113.0	110.4	109.1	107.8	9.2	10.1	11.1	12.2	12.7	13.3
57	126.3	123.2	120.3	117.4	116.0	114.6	9.3	10.3	11.2	12.3	12.9	13.5
62	133.9	130.4	127.0	123.8	122.2	120.6	9.4	10.3	11.4	12.4	13.0	13.6
67	142.6	138.9	134.7	130.9	129.0	127.1	9.5	10.5	11.5	12.6	13.2	13.8
72	152.8	148.1	143.0	138.8	136.9	134.9	9.7	10.7	11.7	12.8	13.4	14.0

Notes:

1. For other airflow conditions, see heating capacity correction factor Net Heating Capacity and Power Input include indoor fan heat at nominal CFM and 0.30 inch ESP. To obtain net heating at other conditions, subtract fan heat at this condition and add fan heat at new condition.
2. Heating capacities and powers are integrated to include the effects of defrost in the frost region.
3. All heating capacities and power (kW) are at 70% OD relative humidity.

Table 68. Heating capacities — 10 tons (W/DHK* and DSK* only)

Outdoor Temp (°F)	Integrated Heating Capacity (MBh) at Indicated Dry Bulb Temp (°F)						Total Power (kW) at Indicated Dry Bulb Temp (°F)					
	40	50	60	70	75	80	40	50	60	70	75	80
-8	38.8	37.8	36.8	35.7	35.2	34.7	5.4	5.9	6.4	7.0	7.4	7.7
-3	44.8	43.7	42.6	41.4	40.9	40.4	5.5	6.0	6.5	7.1	7.5	7.8
2	50.9	49.7	48.5	47.3	46.7	46.1	5.6	6.1	6.6	7.2	7.6	7.9
7	57.1	55.9	54.5	53.2	52.5	51.9	5.6	6.2	6.7	7.3	7.7	8.1
12	62.7	61.3	59.9	58.4	57.7	57.0	5.7	6.2	6.8	7.4	7.8	8.2
17	69.9	68.3	66.7	65.1	64.3	63.6	5.8	6.3	6.9	7.6	7.9	8.3
22	77.4	75.7	73.9	72.1	71.3	70.5	5.9	6.5	7.0	7.7	8.0	8.4
27	85.3	83.4	81.5	79.5	78.6	77.7	6.0	6.6	7.2	7.8	8.2	8.6

Table 68. Heating capacities — 10 tons (W/DHK* and DSK* only) (continued)

32	93.7	91.6	89.4	87.3	86.3	85.3	6.1	6.7	7.3	8.0	8.3	8.7
37	100.4	98.2	95.8	93.6	92.4	91.3	6.2	6.8	7.4	8.1	8.4	8.8
42	108.9	106.5	103.9	101.4	100.2	99.0	6.3	6.9	7.5	8.2	8.6	9.0
47	116.1	113.5	110.7	108.1	106.8	105.5	6.3	6.9	7.6	8.3	8.7	9.1
52	125.3	122.4	119.5	116.7	115.2	113.8	6.4	7.0	7.7	8.5	8.9	9.3
57	133.2	130.0	127.0	123.9	122.3	120.8	6.5	7.1	7.8	8.6	9.0	9.4
62	143.1	139.5	136.2	132.9	131.2	129.6	6.6	7.3	8.0	8.8	9.2	9.6
67	149.5	145.8	142.1	138.6	136.9	135.2	6.6	7.3	8.1	8.9	9.3	9.7
72	154.6	150.7	146.7	142.9	141.1	139.3	6.7	7.4	8.1	8.9	9.3	9.8

Notes:

1. For other airflow conditions, see heating capacity correction factor Net Heating Capacity and Power Input include indoor fan heat at nominal CFM and 0.30 inch ESP. To obtain net heating at other conditions, subtract fan heat at this condition and add fan heat at new condition.
2. Heating capacities and powers are integrated to include the effects of defrost in the frost region.
3. All heating capacities and power (kW) are at 70% OD relative humidity.

Table 69. Heating capacities — 12.5 tons

Outdoor Temp (°F)	Integrated Heating Capacity (MBh) at Indicated Dry Bulb Temp (°F)						Total Power (kW) at Indicated Dry Bulb Temp (°F)					
	40	**50**	**60**	**70**	**75**	**80**	**40**	**50**	**60**	**70**	**75**	**80**
-8	45.2	40.5	36.1	33.3	32.6	31.9	7.8	8.3	9.0	9.9	10.4	10.9
-3	51.7	47.0	43.0	41.1	40.3	39.6	7.9	8.5	9.2	10.1	10.6	11.1
2	58.4	53.5	51.1	49.1	48.3	47.5	8.0	8.6	9.3	10.2	10.7	11.2
7	65.2	62.5	59.7	57.5	56.5	55.7	8.1	8.7	9.5	10.4	10.9	11.4
12	73.2	70.3	67.9	65.8	64.8	63.9	8.3	8.9	9.7	10.5	11.0	11.5
17	82.1	78.9	76.1	73.6	72.5	71.5	8.4	9.1	9.9	10.7	11.2	11.8
22	92.1	88.8	85.9	83.2	82.0	80.9	8.6	9.2	10.0	10.9	11.4	11.9
27	102.9	99.5	96.3	93.4	92.1	90.7	8.7	9.4	10.2	11.1	11.6	12.1
32	114.3	110.6	107.2	104.0	102.5	101.1	8.8	9.6	10.4	11.3	11.8	12.3
37	123.6	119.7	116.1	112.7	111.1	109.6	8.9	9.7	10.5	11.4	12.0	12.5
42	135.2	131.1	127.2	123.6	121.8	120.1	9.1	9.8	10.7	11.6	12.2	12.7
47	145.3	141.0	136.9	133.0	131.1	129.2	9.2	10.0	10.8	11.8	12.3	12.9
52	158.1	153.5	149.1	144.8	142.7	140.6	9.3	10.1	11.0	12.0	12.6	13.1
57	169.2	164.2	159.5	155.0	152.7	150.5	9.4	10.3	11.2	12.2	12.8	13.3
62	183.0	177.4	172.4	167.5	165.0	162.5	9.6	10.4	11.4	12.5	13.0	13.6
67	192.0	186.2	180.9	175.7	173.0	170.5	9.7	10.6	11.5	12.6	13.2	13.8
72	198.7	192.7	187.2	181.7	179.0	176.4	9.8	10.7	11.6	12.7	13.3	13.9

Notes:

1. For other airflow conditions, see heating capacity correction factor Net Heating Capacity and Power Input include indoor fan heat at nominal CFM and 0.35 inch ESP. To obtain net heating at other conditions, subtract fan heat at this condition and add fan heat at new condition.
2. Heating capacities and powers are integrated to include the effects of defrost in the frost region.
3. All heating capacities and power (kW) are at 70% OD relative humidity.

Table 70. Heating capacities — 15 tons

Outdoor Temp (°F)	Integrated Heating Capacity (MBh) at Indicated Dry Bulb Temp (°F)						Total Power (kW) at Indicated Dry Bulb Temp (°F)					
	40	**50**	**60**	**70**	**75**	**80**	**40**	**50**	**60**	**70**	**75**	**80**
-8	46.9	46.4	45.9	45.4	45.1	45.0	9.6	10.0	10.6	11.3	11.8	12.3
-3	57.3	56.4	55.5	54.7	54.3	53.9	9.8	10.2	10.8	11.6	12.1	12.6
2	67.8	66.6	65.4	64.2	63.6	63.1	9.9	10.4	11.1	11.9	12.4	12.9

Table 70. Heating capacities — 15 tons (continued)

Outdoor Temp (°F)	Integrated Heating Capacity (MBh) at Indicated Dry Bulb Temp (°F)						Total Power (kW) at Indicated Dry Bulb Temp (°F)					
	40	50	60	70	75	80	40	50	60	70	75	80
7	78.4	76.9	75.2	71.6	73.8	72.7	10.0	10.6	11.3	12.2	12.7	13.2
12	89.4	87.5	85.6	83.7	82.9	82.1	10.1	10.8	11.5	12.4	12.9	13.5
17	99.4	97.3	95.2	92.9	91.9	90.9	10.3	11.0	11.8	12.7	13.2	13.8
22	111.8	109.4	106.8	104.2	103.0	101.8	10.4	11.1	12.0	12.9	13.5	14.1
27	124.8	122.0	119.0	116.1	114.6	113.2	10.5	11.3	12.2	13.2	13.7	14.3
32	138.3	135.1	131.7	128.4	126.8	125.2	10.5	11.4	12.3	13.4	14.0	14.6
37	149.1	145.7	142.0	138.4	136.6	134.8	10.6	11.5	12.5	13.6	14.2	14.8
42	162.7	158.9	154.8	150.8	148.8	146.9	10.7	11.6	12.6	13.8	14.4	15.0
47	174.3	170.2	165.8	161.5	159.4	157.2	10.7	11.7	12.8	13.9	14.6	15.2
52	189.0	184.4	179.6	174.9	172.5	170.1	10.8	11.8	13.0	14.2	14.8	15.5
57	201.4	196.3	191.3	186.2	183.6	181.1	10.9	12.0	13.1	14.3	15.0	15.7
62	216.8	211.0	205.6	200.1	197.2	194.5	10.9	12.1	13.3	14.6	15.2	15.9
67	226.5	220.5	214.8	209.0	206.0	203.1	11.0	12.2	13.4	14.7	15.4	16.1
72	233.4	227.7	221.7	215.6	212.7	209.7	11.1	12.3	13.5	14.8	15.5	16.2

Notes:

1. For other airflow conditions, see heating capacity correction factor Net Heating Capacity and Power Input include indoor fan heat at nominal CFM and 0.35 inch ESP. To obtain net heating at other conditions, subtract fan heat at this condition and add fan heat at new condition.
2. Heating capacities and powers are integrated to include the effects of defrost in the frost region.
3. All heating capacities and power (kW) are at 70% OD relative humidity.

Table 71. Heating capacities — 17.5 tons

Outdoor Temp (°F)	Integrated Heating Capacity (MBh) at Indicated Dry Bulb Temp (°F)						Total Power (kW) at Indicated Dry Bulb Temp (°F)					
	40	50	60	70	75	80	40	50	60	70	75	80
-8	68.9	67.5	66.1	64.7	64.1	63.5	11.1	12.0	13.0	14.1	14.7	15.4
-3	79.4	77.7	76.0	74.4	73.6	72.9	11.2	12.2	13.2	14.3	15.0	15.6
2	90.1	88.1	86.1	84.3	83.4	82.6	11.4	12.3	13.4	14.6	15.2	15.8
7	101.2	98.9	96.6	94.2	92.1	93.1	11.5	12.5	13.6	14.8	15.4	16.1
12	112.0	109.4	106.9	104.6	103.4	102.4	11.7	12.7	13.8	15.0	15.7	16.4
17	123.4	120.4	117.6	114.8	113.6	112.3	12.0	13.0	14.1	15.3	16.0	16.7
22	136.7	133.4	130.1	127.0	125.5	124.1	12.1	13.2	14.3	15.6	16.2	16.9
27	150.8	147.0	143.3	139.8	138.2	136.6	12.3	13.4	14.6	15.8	16.5	17.2
32	165.6	161.4	157.2	153.3	151.5	149.6	12.5	13.6	14.8	16.1	16.8	17.6
37	177.7	173.1	168.6	164.3	162.3	160.3	12.7	13.8	15.0	16.3	17.1	17.8
42	192.8	187.8	182.7	178.1	175.9	173.7	12.9	14.0	15.3	16.6	17.4	18.1
47	205.8	200.4	195.0	190.0	187.6	185.2	13.0	14.2	15.5	16.9	17.6	18.4
52	222.5	216.4	210.6	205.0	202.3	199.7	13.3	14.4	15.7	17.2	17.9	18.7
57	236.7	229.9	223.8	217.8	214.9	212.0	13.4	14.6	16.0	17.4	18.2	19.0
62	254.2	246.8	240.0	233.5	230.3	227.1	13.6	14.9	16.3	17.8	18.5	19.4
67	265.4	257.5	250.4	243.4	240.0	236.7	13.8	15.0	16.4	17.9	18.7	19.6

Table 71. Heating capacities — 17.5 tons (continued)

Outdoor Temp (°F)	Integrated Heating Capacity (MBh) at Indicated Dry Bulb Temp (°F)						Total Power (kW) at Indicated Dry Bulb Temp (°F)					
	40	50	60	70	75	80	40	50	60	70	75	80
72	273.5	265.3	257.8	250.5	247.1	243.7	13.9	15.2	16.6	18.1	18.9	19.7

Notes:

1. For other airflow conditions, see heating capacity correction factor Net Heating Capacity and Power Input include indoor fan heat at nominal CFM and 0.35 inch ESP. To obtain net heating at other conditions, subtract fan heat at this condition and add fan heat at new condition.
2. Heating capacities and powers are integrated to include the effects of defrost in the frost region.
3. All heating capacities and power (kW) are at 70% OD relative humidity.

Table 72. Heating capacities — 20 tons

Outdoor Temp (°F)	Integrated Heating Capacity (MBh) at Indicated Dry Bulb Temp (°F)						Total Power (kW) at Indicated Dry Bulb Temp (°F)					
	40	50	60	70	75	80	40	50	60	70	75	80
-8	80.0	73.0	68.7	65.8	64.8	64.2	13.1	14.1	15.4	16.8	17.5	18.4
-3	90.1	84.7	80.4	77.4	76.3	75.6	13.3	14.4	15.6	17.0	17.8	18.7
2	102.0	96.6	92.4	89.3	88.2	87.3	13.5	14.6	15.9	17.3	18.1	19.0
7	114.2	109.0	104.8	101.5	100.3	99.3	13.7	14.9	16.1	17.6	18.4	19.2
12	126.1	121.1	117.0	113.8	112.6	111.6	14.0	15.1	16.4	17.9	18.7	19.5
17	139.2	134.0	129.8	126.3	124.9	123.6	14.2	15.4	16.7	18.2	19.0	19.9
22	154.2	149.1	144.7	140.9	139.3	137.8	14.4	15.6	17.0	18.5	19.3	20.2
27	170.2	165.1	160.5	156.5	154.7	153.1	14.6	15.9	17.3	18.8	19.6	20.5
32	187.2	182.1	177.3	173.0	171.0	169.1	14.9	16.1	17.5	19.1	20.0	20.9
37	201.1	196.0	191.0	186.4	184.2	182.2	15.0	16.3	17.8	19.4	20.2	21.2
42	218.8	213.6	208.3	203.4	201.0	198.6	15.3	16.6	18.1	19.7	20.6	21.5
47	234.2	228.7	223.2	218.0	215.4	212.8	15.4	16.8	18.3	20.0	20.9	21.8
52	254.1	248.2	242.4	236.6	233.7	230.9	15.7	17.1	18.6	20.3	21.2	22.2
57	271.1	264.7	258.6	252.4	249.2	246.1	15.9	17.3	18.9	20.6	21.5	22.5
62	292.1	285.2	278.5	271.7	268.2	264.7	16.2	17.6	19.2	21.0	21.9	22.9
67	305.6	298.3	291.2	283.9	280.2	276.5	16.4	17.8	19.5	21.2	22.2	23.1
72	315.2	307.8	300.4	292.9	289.1	285.3	16.5	18.0	19.6	21.4	22.3	23.3

Notes:

1. For other airflow conditions, see heating capacity correction factor Net Heating Capacity and Power Input include indoor fan heat at nominal CFM and 0.40 inch ESP. To obtain net heating at other conditions, subtract fan heat at this condition and add fan heat at new condition.
2. Heating capacities and powers are integrated to include the effects of defrost in the frost region.
3. All heating capacities and power (kW) are at 70% OD relative humidity.

Table 73. Heating capacities — 25 tons

Outdoor Temp (°F)	Integrated Heating Capacity (MBh) at Indicated Dry Bulb Temp (°F)						Total Power (kW) at Indicated Dry Bulb Temp (°F)					
	40	50	60	70	75	80	40	50	60	70	75	80
-8	73.5	67.9	63.1	58.6	56.4	54.3	14.9	16.2	17.6	19.2	20.0	20.9
-3	88.3	83.4	78.9	74.6	72.6	70.7	15.0	16.3	17.7	19.3	20.1	21.0
2	103.6	98.9	94.5	90.4	88.5	86.6	15.0	16.3	17.8	19.4	20.3	21.2
7	119.0	114.4	110.2	106.2	104.3	102.3	15.2	16.5	17.9	19.5	20.4	21.4
12	132.5	128.1	124.0	120.1	118.2	116.4	15.3	16.7	18.1	19.8	20.7	21.6
17	149.5	145.0	140.8	136.6	134.7	132.8	15.5	16.8	18.3	20.0	20.9	21.9
22	167.2	162.8	158.5	154.3	152.3	150.3	15.7	17.0	18.5	20.2	21.2	22.1
27	185.7	181.2	176.8	172.4	170.4	168.4	15.9	17.3	18.8	20.5	21.5	22.5

Table 73. Heating capacities — 25 tons (continued)

Outdoor Temp (°F)	Integrated Heating Capacity (MBh) at Indicated Dry Bulb Temp (°F)						Total Power (kW) at Indicated Dry Bulb Temp (°F)					
	40	50	60	70	75	80	40	50	60	70	75	80
32	204.9	200.3	195.6	191.1	188.9	186.7	16.2	17.6	19.1	20.8	21.8	22.8
37	220.8	215.9	211.1	206.3	204.0	201.8	16.4	17.8	19.4	21.1	22.1	23.1
42	240.3	235.3	230.0	225.0	222.5	220.1	16.7	18.1	19.7	21.5	22.4	23.5
47	257.1	251.7	246.1	240.8	238.1	235.5	17.0	18.4	20.0	21.8	22.8	23.8
52	278.6	272.6	266.5	260.7	257.8	254.9	17.3	18.8	20.4	22.2	23.2	24.2
57	296.8	290.1	283.6	277.3	274.2	271.0	17.6	19.1	20.7	22.6	23.6	24.6
62	320.2	312.2	304.9	297.4	294.4	290.9	18.0	19.5	21.2	23.0	24.0	25.1
67	334.7	326.6	318.8	311.4	307.6	303.9	18.2	19.8	21.5	23.3	24.4	25.4
72	346.5	337.8	354.8	321.2	317.4	313.4	18.5	20.0	22.7	23.6	24.6	25.7

Notes:

1. For other airflow conditions, see heating capacity correction factor Net Heating Capacity and Power Input include indoor fan heat at nominal CFM and 0.40 inch ESP. To obtain net heating at other conditions, subtract fan heat at this condition and add fan heat at new condition.
2. Heating capacities and powers are integrated to include the effects of defrost in the frost region.
3. All heating capacities and power (kW) are at 70% OD relative humidity.

Reheat Temperature Rise

Table 74. Reheat temperature rise — 3 tons

Airflow (cfm)	Ent DB (° F)	Entering Wet Bulb (°F)											
		51				55				59			
		Lvg Evap DB (°F)		Lvg Reheat DB (°F)		Lvg Evap DB (°F)		Lvg Reheat DB (°F)		Lvg Evap DB (°F)		Lvg Reheat DB (°F)	
		MIN	MAX	MIN	MAX	MIN	MAX	MIN	MAX	MIN	MAX	MIN	MAX
Ambient DB 60°F													
900	60	35.9	35.0	56.3	62.3	40.1	39.5	61.7	67.4	44.7	44.4	67.0	72.5
	65	36.1	35.2	56.5	62.4	40.0	39.4	61.7	67.4	44.3	44.1	67.1	72.5
	70	38.3	37.1	59.2	64.5	40.2	39.6	61.9	67.5	44.2	44.0	67.2	72.4
	75	41.5	40.7	63.6	68.8	41.6	40.8	63.6	68.8	44.4	44.1	67.3	72.6
1080	60	38.3	37.3	56.1	61.1	42.4	41.7	61.3	66.2	47.0	46.5	66.3	71.2
	65	38.4	37.5	56.5	61.4	42.4	41.6	61.3	66.2	46.6	46.1	66.6	71.3
	70	41.9	40.7	60.8	65.1	42.6	41.8	61.7	66.5	46.5	46.0	66.7	71.3
	75	45.3	44.4	65.3	69.4	45.4	44.4	65.3	69.4	46.7	46.3	67.0	71.5
1200	60	39.7	38.8	56.2	60.6	43.6	42.9	61.0	65.5	48.2	47.6	65.9	70.5
	65	40.4	38.7	57.2	60.8	43.8	43.0	61.3	65.7	47.8	47.2	66.2	70.6
	70	44.0	42.7	61.7	65.4	43.8	43.0	61.6	65.9	48.0	47.1	66.5	70.6
	75	47.5	46.4	66.1	69.8	47.5	46.5	66.2	69.8	48.0	47.4	66.8	70.9
1320	60	40.7	39.8	56.1	60.1	44.6	43.9	60.7	64.9	49.2	48.5	65.5	69.8
	65	42.1	40.7	57.8	61.2	44.8	44.0	61.1	65.1	48.8	48.2	65.9	69.9
	70	45.7	44.4	62.4	65.7	45.8	44.0	62.4	65.3	49.0	48.4	66.3	70.1
	75	48.9	48.2	67.1	70.1	49.4	48.3	66.9	70.1	49.0	48.4	66.5	70.3
1440	60	41.6	40.7	55.9	59.6	45.5	44.7	60.4	64.3	50.0	49.3	65.1	69.1
	65	43.5	42.2	58.4	61.4	45.7	44.9	61.0	64.6	49.6	49.0	65.5	69.3
	70	47.2	45.9	62.9	65.9	47.3	46.0	63.0	65.9	49.9	49.2	66.0	69.6
	75	50.5	49.8	67.7	70.4	50.9	49.8	67.5	70.4	51.0	49.2	67.5	69.8
Ambient DB 65°F													
900	60	36.2	35.1	57.0	62.8	40.3	39.5	62.4	68.1	44.9	44.3	67.7	73.2
	65	36.3	35.2	57.2	62.9	40.3	39.4	62.4	68.0	44.5	44.0	67.8	73.2
	70	38.6	37.1	60.1	65.1	40.4	39.6	62.6	68.2	44.4	43.9	67.9	73.2
	75	41.9	40.7	64.5	69.4	42.0	40.8	64.5	69.4	44.6	44.1	68.1	73.4
1080	60	38.6	37.4	56.8	61.5	42.6	41.7	61.9	66.7	47.2	46.4	66.9	71.8
	65	38.6	37.6	57.1	61.8	42.5	41.7	61.9	66.7	46.8	46.1	67.2	71.9
	70	42.3	40.8	61.6	65.6	42.7	41.9	62.3	67.0	46.7	46.0	67.2	71.9
	75	45.7	44.4	66.0	70.0	45.8	44.5	66.1	70.0	46.9	46.2	67.6	72.2
1200	60	39.9	38.8	56.7	61.0	43.8	42.9	61.5	66.0	48.3	47.6	66.4	71.0
	65	40.7	38.8	57.8	61.2	44.0	43.1	61.8	66.1	47.9	47.2	66.8	71.1
	70	44.2	42.8	62.3	65.9	43.9	43.1	62.1	66.3	48.1	47.2	67.1	71.1
	75	47.3	46.4	67.1	70.3	47.8	46.5	66.9	70.3	48.1	47.4	67.3	71.4

Table 74. Reheat temperature rise — 3 tons (continued)

Airflow (cfm)	Ent DB (° F)	Entering Wet Bulb (°F)											
		51				55				59			
		Lvg Evap DB (°F)		Lvg Reheat DB (°F)		Lvg Evap DB (°F)		Lvg Reheat DB (°F)		Lvg Evap DB (°F)		Lvg Reheat DB (°F)	
		MIN	MAX	MIN	MAX	MIN	MAX	MIN	MAX	MIN	MAX	MIN	MAX
1320	60	40.9	39.9	56.5	60.4	44.8	43.9	61.2	65.3	49.3	48.5	65.9	70.2
	65	42.4	40.8	58.4	61.6	45.0	44.1	61.6	65.5	48.9	48.2	66.3	70.3
	70	45.7	44.5	63.2	66.1	46.0	44.1	63.0	65.7	49.2	48.4	66.8	70.6
	75	49.1	48.2	67.8	70.6	49.6	48.3	67.5	70.6	49.1	48.4	67.1	70.8
1440	60	41.8	40.8	56.4	60.0	45.6	44.8	60.8	64.7	50.1	49.4	65.5	69.5
	65	43.8	42.3	58.9	61.8	45.9	45.0	61.4	65.0	49.7	49.0	65.9	69.7
	70	47.2	46.0	63.7	66.4	47.5	46.1	63.5	66.4	50.0	49.3	66.5	70.0
	75	51.1	49.8	68.1	70.9	50.8	49.9	68.3	70.9	51.3	49.2	68.1	70.2
Ambient DB 70°F													
900	60	36.4	35.2	57.6	63.3	40.6	39.6	63.0	68.7	45.1	44.3	68.3	73.9
	65	36.5	35.3	57.9	63.4	40.5	39.5	63.0	68.6	44.7	44.0	68.5	74.0
	70	39.0	37.3	60.9	65.7	40.6	39.6	63.3	68.8	44.6	43.9	68.6	73.9
	75	42.2	40.8	65.3	70.1	42.3	40.8	65.4	70.1	44.8	44.1	68.8	74.1
1080	60	38.9	37.5	57.4	61.9	42.8	41.8	62.4	67.2	47.3	46.5	67.5	72.4
	65	38.8	37.7	57.6	62.2	42.7	41.7	62.4	67.2	46.9	46.1	67.8	72.4
	70	42.6	40.9	62.3	66.1	42.9	41.9	62.9	67.5	46.9	46.1	67.8	72.4
	75	46.0	44.5	66.8	70.6	46.1	44.6	66.8	70.6	47.1	46.3	68.2	72.7
1200	60	40.1	39.0	57.2	61.4	44.0	43.0	62.0	66.4	48.5	47.6	66.9	71.4
	65	41.0	38.9	58.5	61.7	44.1	43.1	62.3	66.6	48.1	47.3	67.3	71.6
	70	44.5	42.9	63.0	66.4	44.1	43.1	62.6	66.7	48.3	47.2	67.6	71.6
	75	48.0	46.5	67.5	70.9	48.1	46.6	67.6	70.9	48.3	47.4	67.9	71.9
1320	60	41.1	40.0	57.0	60.9	44.9	44.0	61.6	65.7	49.5	48.6	66.4	70.6
	65	42.6	41.0	59.0	62.2	45.2	44.2	62.1	66.0	49.0	48.2	66.8	70.8
	70	45.9	44.6	63.8	66.7	46.3	44.1	63.6	66.2	49.3	48.5	67.3	71.0
	75	49.8	48.3	68.2	71.1	49.9	48.4	68.2	71.1	49.3	48.4	67.6	71.3
1440	60	41.9	40.9	56.8	60.4	45.7	44.8	61.2	65.1	50.3	49.4	65.9	69.9
	65	44.0	42.4	59.5	62.4	46.0	45.1	61.8	65.4	49.9	49.1	66.4	70.1
	70	47.7	46.2	64.1	66.9	47.8	46.2	64.1	66.9	50.2	49.3	66.9	70.5
	75	51.0	49.9	68.9	71.4	51.5	50.0	68.7	71.4	51.6	49.3	68.7	70.7

Note: MIN, MAX: The leaving evaporator temperature is affected by the modulating valve position. The MIN and MAX numbers represent modulating valve position impact on both the leaving evaporator temperature and the leaving reheat coil temperature. MAX represents wide open, MIN represents closed to minimum position.

Table 75. Reheat temperature rise — 4 tons

Airflow (cfm)	Ent DB (°F)	Entering Wet Bulb (°F)											
		51				55				59			
		Lvg Evap DB (°F)		Lvg Reheat DB (°F)		Lvg Evap DB (°F)		Lvg Reheat DB (°F)		Lvg Evap DB (°F)		Lvg Reheat DB (°F)	
		MIN	MAX	MIN	MAX	MIN	MAX	MIN	MAX	MIN	MAX	MIN	MAX
Ambient DB 60°F													
1200	60	36.5	35.4	58.5	63.1	40.7	40.0	64.0	68.4	45.3	44.9	69.5	73.5
	65	36.6	35.6	58.8	63.3	40.6	39.9	64.1	68.4	45.0	44.6	69.6	73.5
	70	39.1	37.7	62.0	65.8	40.8	40.0	64.3	68.5	44.9	44.5	69.7	73.5
	75	42.4	41.4	66.5	70.2	42.5	41.5	66.6	70.2	45.0	44.7	69.9	73.7
1440	60	38.9	37.7	58.1	61.9	42.9	42.1	63.2	67.0	47.5	46.9	68.4	72.0
	65	38.9	37.9	58.4	62.2	42.8	42.0	63.3	67.0	47.2	46.6	68.7	72.1
	70	42.7	41.3	63.2	66.2	43.1	42.2	63.7	67.4	47.1	46.5	68.7	72.1
	75	46.3	45.1	67.8	70.7	46.3	45.2	67.9	70.7	47.3	46.7	69.1	72.5
1600	60	40.1	39.1	57.8	61.4	44.1	43.2	62.7	66.3	48.6	47.9	67.7	71.2
	65	41.1	39.0	59.2	61.7	44.3	43.2	63.1	66.3	48.3	47.6	68.1	71.3
	70	44.7	43.3	63.8	66.5	44.2	43.4	63.4	66.7	48.5	47.6	68.4	71.3
	75	48.3	47.1	68.5	71.0	48.4	47.2	68.5	71.0	48.5	47.8	68.7	71.8
1760	60	41.1	40.1	57.5	60.9	45.0	44.2	62.3	65.6	49.6	48.9	67.2	70.5
	65	42.7	41.2	59.7	62.2	45.3	44.4	62.7	65.9	49.2	48.6	67.5	70.6
	70	46.4	45.0	64.4	66.8	46.5	44.3	64.4	66.2	49.5	48.8	67.9	70.9
	75	50.2	48.9	69.0	71.3	50.2	49.0	69.1	71.3	49.4	48.8	68.3	71.2
1920	60	42.0	41.0	57.3	60.4	45.8	45.0	61.9	65.0	50.4	49.6	66.7	69.8
	65	43.8	42.6	60.2	62.4	46.1	45.3	62.4	65.4	50.0	49.3	67.0	70.0
	70	48.0	44.9	64.8	67.5	48.0	46.6	64.8	67.0	50.3	49.6	67.5	70.3
	75	51.1	50.5	69.7	71.6	51.8	50.6	69.5	71.6	51.9	49.6	69.5	70.6
Ambient DB 65°F													
1200	60	36.7	35.5	59.1	63.7	40.9	40.0	64.6	69.0	45.5	44.8	70.1	74.2
	65	36.8	35.6	59.4	63.9	40.8	39.9	64.7	69.0	45.2	44.5	70.3	74.3
	70	39.4	37.7	62.8	66.4	41.0	40.0	64.9	69.2	45.1	44.4	70.3	74.3
	75	42.8	41.4	67.4	70.8	42.9	41.5	67.4	70.8	45.3	44.6	70.6	74.5
1440	60	39.1	37.8	58.6	62.5	43.1	42.1	63.7	67.7	47.7	46.9	68.9	72.7
	65	39.1	37.9	58.9	62.8	43.0	42.1	63.8	67.7	47.3	46.6	69.2	72.8
	70	43.0	41.4	63.9	66.9	43.2	42.3	64.3	68.0	47.2	46.5	69.2	72.8
	75	46.6	45.1	68.5	71.4	46.7	45.2	68.6	71.4	47.5	46.7	69.7	73.1
1600	60	40.3	39.1	58.3	62.0	44.2	43.3	63.2	66.9	48.8	48.0	68.2	71.8
	65	41.4	39.1	59.8	62.2	44.4	43.2	63.5	66.9	48.4	47.7	68.5	72.0
	70	45.0	43.4	64.5	67.2	44.4	43.4	63.8	67.3	48.7	47.6	68.9	72.0
	75	47.9	47.2	69.4	71.7	48.7	47.3	69.1	71.7	48.6	47.9	69.1	72.4
1760	60	41.3	40.2	57.9	61.4	45.2	44.2	62.7	66.1	49.7	48.9	67.6	71.0
	65	43.0	41.3	60.2	62.8	45.4	44.4	63.1	66.4	49.4	48.6	67.9	71.2
	70	46.7	45.1	64.9	67.4	46.8	44.4	64.9	66.7	49.6	48.8	68.3	71.5
	75	50.4	49.0	69.6	71.9	50.5	49.1	69.6	72.0	50.6	48.8	69.6	71.7

Table 75. Reheat temperature rise — 4 tons (continued)

Airflow (cfm)	Ent DB (° F)	Entering Wet Bulb (°F)											
		51				55				59			
		Lvg Evap DB (°F)		Lvg Reheat DB (°F)		Lvg Evap DB (°F)		Lvg Reheat DB (°F)		Lvg Evap DB (°F)		Lvg Reheat DB (°F)	
		MIN	MAX	MIN	MAX	MIN	MAX	MIN	MAX	MIN	MAX	MIN	MAX
1920	60	42.1	41.1	57.6	60.8	46.0	45.1	62.2	65.5	50.5	49.7	67.0	70.3
	65	44.4	42.7	60.6	62.9	46.3	45.3	62.7	65.8	50.1	49.4	67.4	70.5
	70	47.7	46.6	65.5	67.6	48.3	46.7	65.3	67.6	50.5	49.6	67.9	70.9
	75	51.3	50.6	70.2	72.2	52.1	50.6	70.1	72.2	52.2	49.6	70.1	71.2
Ambient DB 70°F													
1200	60	36.9	35.6	59.7	64.4	41.1	40.0	65.2	69.7	45.7	44.8	70.7	75.0
	65	37.1	35.7	60.0	64.6	41.0	39.9	65.3	69.7	45.4	44.5	70.9	75.0
	70	39.8	37.8	63.6	67.2	41.2	40.1	65.6	69.9	45.3	44.4	70.9	75.0
	75	43.2	41.5	68.2	71.6	43.3	41.6	68.2	71.6	45.5	44.6	71.2	75.3
1440	60	39.3	37.8	59.2	63.1	43.3	42.2	64.2	68.3	47.9	46.9	69.4	73.3
	65	39.2	38.0	59.4	63.4	43.4	42.1	64.5	68.3	47.5	46.6	69.7	73.4
	70	43.3	41.5	64.6	67.6	43.4	42.3	64.8	68.6	47.4	46.5	69.7	73.5
	75	46.9	45.2	69.2	72.1	47.0	45.3	69.3	72.1	47.7	46.8	70.2	73.8
1600	60	40.5	39.0	58.7	62.3	44.4	43.3	63.6	67.4	49.0	48.0	68.6	72.4
	65	41.7	39.2	60.4	62.7	44.6	43.3	64.0	67.4	48.6	47.7	68.9	72.5
	70	45.3	43.4	65.0	67.7	44.5	43.5	64.3	67.9	48.8	47.6	69.3	72.6
	75	48.2	47.3	70.0	72.3	49.0	47.3	69.8	72.3	48.8	47.9	69.6	73.0
1760	60	41.5	40.2	58.4	61.8	45.3	44.3	63.1	66.6	49.9	48.9	68.0	71.5
	65	43.3	41.4	60.7	63.3	45.6	44.5	63.5	66.9	49.5	48.6	68.3	71.7
	70	47.0	45.2	65.5	67.9	47.1	44.4	65.5	67.2	49.8	48.8	68.8	72.0
	75	50.0	49.1	70.4	72.5	50.8	49.1	70.2	72.5	50.9	48.8	70.2	72.3
1920	60	42.3	41.1	58.0	61.3	46.1	45.1	62.6	65.9	50.8	49.7	67.1	70.8
	65	44.7	42.8	61.1	63.4	46.4	45.3	63.1	66.3	50.3	49.4	67.7	71.0
	70	48.5	46.7	65.8	68.1	48.5	46.8	65.8	68.1	50.6	49.7	68.3	71.3
	75	52.3	50.6	70.6	72.7	52.3	50.7	70.6	72.7	52.4	49.6	70.6	71.7

Note: MIN, MAX: The leaving evaporator temperature is affected by the modulating valve position. The MIN and MAX numbers represent modulating valve position impact on both the leaving evaporator temperature and the leaving reheat coil temperature. MAX represents wide open, MIN represents closed to minimum position.

Table 76. Reheat temperature rise — 5 tons

Airflow (cfm)	Ent DB (° F)	Entering Wet Bulb (°F)											
		51				55				59			
		Lvg Evap DB (°F)		Lvg Reheat DB (°F)		Lvg Evap DB (°F)		Lvg Reheat DB (°F)		Lvg Evap DB (°F)		Lvg Reheat DB (°F)	
		MIN	MAX	MIN	MAX	MIN	MAX	MIN	MAX	MIN	MAX	MIN	MAX
Ambient DB 60°F													
1500	60	37.4	36.7	58.9	62.4	41.6	41.3	64.3	67.4	46.8	46.9	69.5	72.0
	65	37.7	37.0	59.4	62.8	41.6	41.2	64.4	67.4	45.9	46.1	69.9	72.2
	70	40.5	39.8	63.0	65.9	41.9	41.7	64.9	67.9	46.0	46.2	70.0	72.3
	75	44.0	43.9	67.7	70.1	44.1	44.2	67.7	70.3	46.3	46.7	70.4	72.7

Table 76. Reheat temperature rise — 5 tons (continued)

Airflow (cfm)	Ent DB (° F)	Entering Wet Bulb (°F)											
		51				55				59			
		Lvg Evap DB (°F)		Lvg Reheat DB (°F)		Lvg Evap DB (°F)		Lvg Reheat DB (°F)		Lvg Evap DB (°F)		Lvg Reheat DB (°F)	
		MIN	MAX	MIN	MAX	MIN	MAX	MIN	MAX	MIN	MAX	MIN	MAX
1800	60	39.7	38.9	58.5	61.6	43.7	43.1	63.5	66.4	48.8	48.5	68.6	71.2
	65	39.8	39.1	59.0	62.0	44.0	43.4	63.9	66.7	48.0	47.7	68.9	71.4
	70	44.0	43.1	64.2	66.5	44.1	43.6	64.3	67.0	48.3	48.1	69.3	71.7
	75	47.7	47.2	68.9	71.0	47.8	47.3	68.9	71.0	48.5	48.2	69.7	72.0
2000	60	40.9	40.1	58.2	61.1	44.7	44.1	63.0	65.7	49.9	49.4	67.8	70.5
	65	42.1	40.9	60.0	62.2	45.1	44.5	63.5	66.1	49.0	48.6	68.3	70.7
	70	45.9	44.9	64.7	66.8	46.0	44.7	64.7	66.6	49.4	49.1	68.8	71.1
	75	49.7	49.1	69.5	71.4	49.8	49.1	69.5	71.4	49.6	49.3	69.3	71.5
2200	60	41.9	41.0	58.0	60.7	45.6	45.0	62.5	65.2	50.7	50.2	67.2	69.8
	65	43.7	42.5	60.4	62.4	46.1	45.4	63.1	65.7	49.9	49.5	67.7	70.1
	70	47.6	46.5	65.2	67.1	47.6	46.6	65.2	67.1	50.4	49.9	68.4	70.6
	75	50.2	50.7	70.3	71.7	51.5	50.8	70.0	71.7	51.6	50.9	70.0	71.7
2400	60	42.7	41.9	57.7	60.3	46.4	45.8	62.1	64.7	51.5	50.9	66.7	69.2
	65	45.1	43.8	60.8	62.6	46.9	46.2	62.8	65.2	50.7	50.2	67.2	69.6
	70	49.0	48.0	65.6	67.3	49.1	48.0	65.6	67.3	51.2	50.7	68.0	70.1
	75	51.8	52.2	70.6	72.0	53.0	52.3	70.4	72.0	53.1	52.4	70.4	72.0
Ambient DB 65°F													
1500	60	37.6	36.7	59.4	63.0	41.7	41.2	64.8	68.0	46.9	46.7	70.0	72.9
	65	37.9	37.0	59.9	63.3	41.8	41.3	64.9	68.1	46.1	45.9	70.4	73.1
	70	40.8	39.7	63.7	66.5	42.1	41.6	65.4	68.5	46.1	45.9	70.5	73.1
	75	44.3	43.8	68.4	71.0	44.4	43.9	68.4	71.0	46.5	46.4	71.0	73.6
1800	60	39.9	38.8	59.0	62.0	43.8	43.1	63.9	66.9	49.0	48.4	68.9	71.7
	65	40.6	39.1	60.0	62.5	44.1	43.2	64.3	67.1	48.1	47.6	69.3	72.0
	70	44.2	43.1	64.7	67.0	44.3	43.6	64.8	67.6	48.5	48.0	69.8	72.3
	75	48.0	47.2	69.5	71.6	48.0	47.2	69.5	71.6	48.6	48.2	70.2	72.7
2000	60	41.0	40.1	58.6	61.6	44.9	44.1	63.3	66.3	50.0	49.4	68.3	71.0
	65	42.4	40.9	60.5	62.7	45.3	44.3	63.9	66.5	49.1	48.6	68.7	71.3
	70	46.1	44.9	65.2	67.3	46.2	44.7	65.3	67.1	49.6	49.0	69.2	71.7
	75	49.9	49.1	70.0	72.0	50.0	49.1	70.0	72.0	49.7	49.2	69.7	72.1
2200	60	42.0	41.1	58.3	61.1	45.8	45.0	62.9	65.6	50.9	50.2	67.6	70.4
	65	43.9	42.5	60.9	62.9	46.2	45.4	63.5	66.1	50.0	49.5	68.1	70.6
	70	47.8	46.5	65.7	67.6	47.9	46.6	65.7	67.6	50.5	49.9	68.8	71.1
	75	51.7	50.7	70.5	72.2	51.7	50.8	70.5	72.3	51.8	50.9	70.5	72.3
2400	60	42.8	41.9	58.0	60.7	46.5	45.8	62.4	65.1	51.6	50.9	67.0	69.7
	65	45.3	43.9	61.2	63.1	47.0	46.0	63.2	65.4	50.8	50.2	67.6	70.0
	70	48.4	48.0	66.2	67.8	49.3	48.0	66.0	67.8	51.3	50.7	68.3	70.6
	75	53.2	52.2	70.8	72.5	53.2	52.3	70.9	72.5	53.3	52.3	70.9	72.5
Ambient DB 70°F													

Table 76. Reheat temperature rise — 5 tons (continued)

Airflow (cfm)	Ent DB (° F)	Entering Wet Bulb (°F)											
		51				55				59			
		Lvg Evap DB (°F)		Lvg Reheat DB (°F)		Lvg Evap DB (°F)		Lvg Reheat DB (°F)		Lvg Evap DB (°F)		Lvg Reheat DB (°F)	
		MIN	MAX	MIN	MAX	MIN	MAX	MIN	MAX	MIN	MAX	MIN	MAX
1500	60	37.8	36.8	59.9	63.6	41.9	41.2	65.3	68.7	47.1	46.7	70.6	73.6
	65	38.1	37.1	60.4	63.9	42.0	41.3	65.5	68.8	46.2	45.9	70.9	73.8
	70	41.1	39.8	64.4	67.1	42.3	41.6	66.0	69.2	46.3	45.9	71.1	74.0
	75	44.6	43.8	69.1	71.7	44.7	43.9	69.1	71.7	46.7	46.3	71.6	74.3
1800	60	40.1	38.8	59.4	62.5	43.9	43.1	64.3	67.5	49.1	48.4	69.3	72.3
	65	40.8	39.1	60.5	63.0	44.3	43.4	64.8	67.8	48.2	47.7	69.7	72.6
	70	44.5	43.1	65.3	67.6	44.4	43.6	65.2	68.2	48.6	47.8	70.2	72.7
	75	48.2	47.2	70.1	72.2	48.3	47.3	70.1	72.2	48.8	48.2	70.6	73.3
2000	60	41.2	40.1	59.0	62.0	45.0	44.2	63.7	66.7	50.1	49.4	68.6	71.5
	65	42.6	41.0	61.0	63.2	45.4	44.5	64.3	67.2	49.3	48.6	69.0	71.8
	70	46.4	45.0	65.8	67.9	46.5	44.7	65.8	67.6	49.7	49.1	69.6	72.2
	75	50.2	49.1	70.6	72.5	50.3	49.1	70.6	72.5	49.8	49.2	70.1	72.6
2200	60	42.2	41.1	58.7	61.5	45.9	45.0	63.2	66.1	51.0	50.2	67.9	70.7
	65	44.2	42.5	61.3	63.4	46.4	45.5	63.9	66.6	50.1	49.5	68.4	71.1
	70	48.0	46.6	66.1	68.1	48.1	46.6	66.1	68.1	50.6	49.9	69.1	71.6
	75	51.9	50.7	71.0	72.7	52.0	50.8	71.0	72.8	52.0	50.9	71.0	72.8
2400	60	43.0	41.9	58.4	61.0	46.6	45.8	62.7	65.5	51.7	50.9	67.3	70.1
	65	45.5	43.9	61.6	63.5	47.2	46.3	63.5	66.1	50.9	50.2	67.9	70.5
	70	49.4	48.0	66.5	68.2	49.5	48.1	66.5	68.2	51.4	50.7	68.7	71.1
	75	53.4	52.2	71.3	72.9	53.4	52.3	71.3	72.9	53.5	52.3	71.3	73.0

Note: MIN, MAX: The leaving evaporator temperature is affected by the modulating valve position. The MIN and MAX numbers represent modulating valve position impact on both the leaving evaporator temperature and the leaving reheat coil temperature. MAX represents wide open, MIN represents closed to minimum position.

Table 77. Reheat temperature rise — 6 tons

Airflow (cfm)	Ent DB (° F)	Entering Wet Bulb (°F)											
		51				55				59			
		Lvg Evap DB (°F)		Lvg Reheat DB (°F)		Lvg Evap DB (°F)		Lvg Reheat DB (°F)		Lvg Evap DB (°F)		Lvg Reheat DB (°F)	
		MIN	MAX	MIN	MAX	MIN	MAX	MIN	MAX	MIN	MAX	MIN	MAX
Ambient DB 60°F													
1800	60	39.7	41.6	48.5	55.3	43.7	44.1	53.1	60.7	47.8	51.0	57.7	55.7
	65	39.6	40.4	48.5	57.5	43.7	46.0	53.0	59.2	47.8	48.7	57.6	64.5
	70	40.6	40.6	49.5	57.6	43.6	48.1	53.0	62.7	47.7	49.6	57.6	65.1
	75	41.0	53.5	49.7	67.0	44.7	52.2	54.1	66.0	47.6	50.0	57.6	65.4
2160	60	41.3	41.2	49.0	56.4	45.4	45.6	53.5	60.3	49.5	50.1	58.1	64.2
	65	42.2	46.2	49.9	59.6	45.3	46.2	53.5	60.7	49.5	50.1	58.1	64.1
	70	42.4	42.2	50.1	57.4	46.3	50.1	54.4	63.0	49.4	50.0	58.0	64.1
	75	54.0	55.7	61.4	67.6	46.5	46.8	54.7	61.4	53.5	49.9	60.9	64.1

Table 77. Reheat temperature rise — 6 tons (continued)

Airflow (cfm)	Ent DB (° F)	Entering Wet Bulb (°F)											
		51				55				59			
		Lvg Evap DB (°F)		Lvg Reheat DB (°F)		Lvg Evap DB (°F)		Lvg Reheat DB (°F)		Lvg Evap DB (°F)		Lvg Reheat DB (°F)	
		MIN	MAX	MIN	MAX	MIN	MAX	MIN	MAX	MIN	MAX	MIN	MAX
2400	60	42.2	42.0	49.3	56.0	46.3	46.3	53.7	60.0	50.3	50.9	58.3	63.9
	65	42.1	46.6	49.3	59.3	46.2	46.3	53.7	60.0	50.4	50.8	58.3	63.9
	70	51.4	52.1	58.0	64.0	46.1	47.4	53.7	60.9	50.2	50.7	58.2	63.9
	75	55.3	57.0	62.2	68.0	54.2	47.6	61.2	61.1	54.7	52.1	61.7	64.9
2640	60	42.9	43.7	49.5	55.7	47.0	47.0	53.9	59.8	51.1	51.5	58.4	63.7
	65	43.8	43.6	50.5	56.6	46.9	46.9	53.9	59.8	51.0	51.4	58.4	63.7
	70	44.0	53.2	50.7	64.3	46.8	53.3	53.9	64.3	51.0	52.4	58.4	64.5
	75	56.5	58.0	63.0	68.4	48.1	58.1	55.2	68.4	50.9	52.7	58.4	64.8
2880	60	43.5	43.3	49.7	55.5	47.6	47.5	54.0	59.6	51.7	52.0	58.5	63.5
	65	44.5	49.3	50.7	60.4	49.0	47.5	54.8	59.6	51.6	51.9	58.5	63.5
	70	53.5	54.1	59.4	64.6	48.6	53.1	55.1	63.7	51.8	54.3	58.6	64.6
	75	57.5	59.0	63.7	68.7	57.6	48.8	63.8	60.7	52.7	59.1	59.7	68.7
Ambient DB 65°F													
1800	60	39.7	39.5	48.9	57.5	43.8	43.8	53.5	61.7	47.9	48.4	58.2	65.5
	65	39.6	39.4	48.9	57.5	43.7	43.7	53.5	61.6	47.8	48.4	58.1	65.5
	70	40.7	48.2	49.9	63.8	43.7	47.6	53.5	63.3	47.8	48.3	58.1	65.5
	75	41.1	40.8	50.1	58.6	44.8	45.0	54.6	62.6	47.7	48.2	58.1	65.4
2160	60	42.9	41.1	48.9	56.8	45.5	45.4	53.9	61.2	49.5	49.8	58.5	65.0
	65	45.6	42.0	52.8	57.6	45.4	45.3	53.9	61.1	49.5	49.8	58.5	65.0
	70	42.4	42.2	50.5	57.9	49.6	46.3	57.0	61.9	49.5	49.7	58.5	65.0
	75	54.1	55.1	61.8	68.2	46.5	53.7	55.1	67.1	53.6	54.4	61.3	67.6
2400	60	42.2	42.0	49.6	56.4	46.3	46.2	54.1	60.8	50.4	50.6	58.6	64.7
	65	43.2	42.8	50.5	57.2	47.0	47.5	54.7	60.2	50.4	50.9	58.6	64.9
	70	43.3	43.0	50.8	57.5	51.5	51.6	58.4	64.5	50.3	50.5	58.6	64.7
	75	55.4	56.4	62.7	68.6	47.4	47.3	55.3	61.9	51.4	56.5	59.7	68.6
2640	60	42.9	42.7	49.8	56.1	47.1	46.9	54.2	60.5	51.1	51.2	58.7	64.4
	65	42.9	43.6	49.8	57.0	47.0	46.8	54.3	60.5	51.1	51.2	58.7	64.4
	70	52.6	43.8	59.1	57.2	46.9	47.8	54.2	61.4	51.0	52.0	58.7	65.1
	75	56.6	57.5	63.4	68.9	56.6	48.0	63.4	61.6	52.1	56.5	59.9	68.1
2880	60	43.5	44.6	49.9	56.1	47.7	48.7	54.4	56.5	51.7	51.7	58.8	64.2
	65	44.5	43.2	50.9	55.8	47.6	47.4	54.4	60.2	51.7	51.7	58.8	64.2
	70	44.7	53.6	51.2	65.0	53.6	48.4	59.8	61.2	51.6	51.6	58.8	64.2
	75	57.6	58.5	64.1	69.1	57.7	48.6	64.1	61.4	52.7	58.6	60.0	69.2
Ambient DB 70°F													
1800	60	39.8	39.5	49.3	58.0	43.9	43.7	54.0	62.5	48.0	48.1	58.6	66.5
	65	39.7	39.4	49.3	58.0	43.8	43.6	53.9	62.5	47.9	48.1	58.6	66.4
	70	40.8	40.5	50.3	59.0	43.7	43.6	53.9	62.4	47.9	48.0	58.6	66.4
	75	51.9	40.8	60.8	59.1	44.9	44.8	55.1	63.5	47.8	51.8	58.6	67.9
2160	60	41.5	41.1	49.8	57.2	45.6	45.3	54.3	61.7	49.6	51.9	58.9	56.7
	65	42.3	42.0	50.6	58.0	45.5	45.3	54.3	61.7	49.6	49.6	58.8	65.9
	70	42.5	42.2	50.9	58.3	50.4	45.2	58.0	61.7	49.5	51.2	58.8	64.7
	75	54.2	54.5	62.2	68.8	46.6	46.4	55.5	62.8	49.5	49.4	58.9	65.9

Table 77. Reheat temperature rise — 6 tons (continued)

Airflow (cfm)	Ent DB (° F)	Entering Wet Bulb (°F)											
		51				55				59			
		Lvg Evap DB (°F)		Lvg Reheat DB (°F)		Lvg Evap DB (°F)		Lvg Reheat DB (°F)		Lvg Evap DB (°F)		Lvg Reheat DB (°F)	
		MIN	MAX	MIN	MAX	MIN	MAX	MIN	MAX	MIN	MAX	MIN	MAX
2400	60	42.3	42.0	49.9	56.9	46.4	46.2	54.5	61.3	50.5	50.4	59.0	65.6
	65	43.2	47.2	50.8	60.9	46.3	46.8	54.5	61.9	50.4	50.3	59.0	65.6
	70	43.4	43.0	51.1	58.0	46.2	47.1	54.4	62.2	50.4	50.3	59.0	65.6
	75	55.5	55.8	63.1	69.1	54.4	54.5	62.0	68.0	51.4	55.1	60.1	68.4
2640	60	43.0	42.7	50.1	56.6	47.1	46.9	54.5	61.0	51.2	51.0	59.1	65.2
	65	44.0	43.6	51.1	57.5	47.0	46.8	54.6	61.0	51.1	51.0	59.1	65.2
	70	44.1	43.8	51.3	57.8	47.0	52.5	54.6	65.3	51.1	52.2	59.1	65.0
	75	56.7	56.9	63.8	69.4	56.8	57.0	63.9	69.3	52.2	52.1	60.2	66.2
2880	60	43.6	43.3	50.1	56.3	47.7	47.5	54.7	60.7	51.8	51.6	59.1	64.9
	65	44.6	49.2	51.2	61.2	48.4	47.4	55.4	60.7	51.7	51.6	59.2	64.9
	70	53.7	53.4	60.1	65.5	52.8	48.4	59.3	61.7	51.7	51.5	59.2	65.0
	75	57.7	57.9	64.5	69.6	57.8	48.6	64.5	61.9	52.8	51.5	60.3	65.0

Note: MIN, MAX: The leaving evaporator temperature is affected by the modulating valve position. The MIN and MAX numbers represent modulating valve position impact on both the leaving evaporator temperature and the leaving reheat coil temperature. MAX represents wide open, MIN represents closed to minimum position.

Table 78. Reheat temperature rise – 7.5 tons

Air-flow (cfm)	Ent DB (° F)	Entering Wet Bulb (°F)											
		51				55				59			
		Lvg Evap DB (°F)		Lvg Reheat DB (°F)		Lvg Evap DB (°F)		Lvg Reheat DB (°F)		Lvg Evap DB (°F)		Lvg Reheat DB (°F)	
		MIN	MAX	MIN	MAX	MIN	MAX	MIN	MAX	MIN	MAX	MIN	MAX
Ambient DB 60°F													
2250	60	40.7	40.6	47.2	56.7	44.7	44.9	51.7	60.7	48.8	49.5	56.4	64.6
	65	40.6	45.2	47.2	59.7	44.7	46.5	51.7	59.6	48.8	49.5	56.3	64.6
	70	41.6	41.6	48.3	57.7	45.5	45.9	52.6	61.5	48.7	51.0	56.3	63.5
	75	52.9	54.5	59.4	67.6	53.0	46.1	59.4	61.7	48.6	50.6	56.3	65.5
2700	60	42.8	42.0	48.5	56.1	46.2	46.3	52.4	60.1	50.3	50.8	56.9	64.2
	65	42.1	42.9	48.0	56.9	46.2	46.2	52.4	60.2	50.3	50.7	56.9	64.2
	70	51.3	51.9	56.8	64.2	50.7	47.3	56.1	61.0	50.2	50.7	56.9	64.2
	75	55.3	56.7	61.0	68.2	55.3	56.7	61.0	68.3	51.2	50.6	57.9	64.2
3000	60	44.1	43.4	48.7	56.3	47.0	47.0	52.7	60.0	51.1	52.9	57.2	56.5
	65	43.8	43.7	49.2	56.6	48.2	46.9	53.1	59.9	51.0	51.4	57.2	63.9
	70	52.5	53.1	57.6	64.4	46.9	48.0	52.7	60.8	51.0	52.3	57.2	64.6
	75	56.5	57.9	61.9	68.6	48.1	48.2	53.9	61.0	52.0	52.6	58.2	64.9
3300	60	43.6	44.8	48.6	55.9	47.7	47.6	53.0	59.7	51.7	52.0	57.4	63.7
	65	43.5	49.5	48.6	60.5	47.6	47.5	53.0	59.7	51.7	52.0	57.4	63.6
	70	53.6	54.2	58.5	64.7	52.8	48.6	57.7	60.6	51.6	51.9	57.4	63.6
	75	57.7	58.9	62.8	69.0	57.7	48.8	62.8	60.8	57.8	53.2	62.8	64.7
3600	60	44.1	45.6	48.8	56.0	48.5	48.1	53.4	59.5	52.2	52.5	57.6	63.5
	65	45.1	44.9	49.9	56.2	48.9	48.1	53.9	59.5	52.2	52.4	57.6	63.4
	70	54.6	55.1	59.2	65.0	49.1	54.0	54.2	64.1	52.1	52.4	57.6	63.4
	75	58.7	59.9	63.5	69.3	58.7	59.9	63.6	69.3	53.3	58.7	58.7	68.2
Ambient DB 65°F													

Table 78. Reheat temperature rise – 7.5 tons (continued)

Air-flow (cfm)	Ent DB (° F)	Entering Wet Bulb (°F)											
		51				55				59			
		Lvg Evap DB (°F)		Lvg Reheat DB (°F)		Lvg Evap DB (°F)		Lvg Reheat DB (°F)		Lvg Evap DB (°F)		Lvg Reheat DB (°F)	
		MIN	MAX	MIN	MAX	MIN	MAX	MIN	MAX	MIN	MAX	MIN	MAX
2250	60	40.8	40.6	47.6	57.2	44.8	44.8	52.1	61.6	48.9	49.2	56.8	65.5
	65	44.8	40.5	50.8	57.2	44.8	44.7	52.1	61.6	48.8	49.2	56.7	65.5
	70	41.7	48.2	48.7	63.4	44.7	44.6	52.1	61.5	48.8	50.8	56.7	64.0
	75	53.1	41.7	59.7	58.4	52.2	54.0	58.8	68.2	52.7	49.0	59.2	65.5
2700	60	42.2	42.6	48.3	57.0	46.5	46.2	52.8	60.9	50.4	50.5	57.3	65.0
	65	42.2	42.9	48.3	57.3	46.2	46.1	52.7	60.9	50.3	50.5	57.3	65.0
	70	51.4	51.5	57.1	64.7	46.2	46.1	52.7	60.9	50.3	50.4	57.2	64.9
	75	55.4	56.2	61.3	68.8	46.1	47.3	52.7	62.0	50.2	51.6	57.2	65.9
3000	60	44.2	43.4	49.0	56.7	47.1	47.0	53.0	60.5	51.1	51.2	57.5	64.7
	65	43.9	48.4	49.5	60.8	47.0	47.6	53.0	61.1	51.1	51.2	57.5	64.6
	70	52.6	52.7	58.0	64.9	48.0	47.9	54.0	61.4	51.0	51.1	57.5	64.6
	75	56.7	57.4	62.3	69.1	55.5	57.5	61.2	69.1	51.0	52.3	57.5	65.6
3300	60	43.6	43.4	48.9	55.8	47.7	47.6	53.2	60.2	51.8	51.8	57.7	64.4
	65	43.5	48.5	48.8	60.2	47.6	47.5	53.3	60.2	51.7	51.8	57.7	64.4
	70	53.7	44.5	58.8	56.9	52.9	48.5	58.0	61.1	51.7	51.7	57.7	64.4
	75	57.8	58.5	63.1	69.4	57.8	58.5	63.2	69.4	52.7	52.9	58.8	65.3
3600	60	44.2	44.0	49.0	55.5	48.3	48.1	53.4	59.9	52.3	52.3	57.9	64.1
	65	45.1	50.3	50.1	61.2	48.2	49.9	53.4	60.8	52.3	52.3	57.9	64.1
	70	54.7	54.7	59.5	65.4	53.8	49.1	58.6	60.9	52.2	52.2	57.9	64.1
	75	58.8	59.4	63.8	69.7	58.8	59.5	63.9	69.7	58.9	53.4	63.9	65.1
Ambient DB 70°F													
2250	60	40.9	42.3	48.0	56.1	44.9	44.7	52.5	62.2	48.9	49.0	57.2	66.5
	65	40.8	40.5	48.0	57.6	44.8	45.3	52.5	62.6	48.9	49.0	57.1	66.5
	70	49.4	49.2	55.9	64.9	44.8	44.6	52.5	62.2	48.9	48.9	57.1	66.5
	75	53.2	53.4	60.0	68.9	45.9	45.8	53.6	63.2	48.8	48.8	57.1	66.4
2700	60	42.3	42.6	48.6	57.3	46.4	46.2	53.0	61.4	50.4	50.4	57.6	65.8
	65	42.2	46.5	48.6	60.3	46.3	47.5	53.0	61.0	50.4	50.4	57.6	65.8
	70	43.3	43.1	49.7	57.9	50.9	46.1	56.9	61.4	50.3	50.3	57.6	65.8
	75	55.5	55.7	61.8	69.3	54.4	47.2	60.7	62.5	51.3	55.0	58.6	68.7
3000	60	43.1	42.8	48.9	56.4	47.2	47.2	53.3	61.1	51.2	51.1	57.8	65.4
	65	44.0	43.7	49.8	57.3	47.1	48.1	53.3	60.8	51.2	51.1	57.8	65.4
	70	44.1	43.8	50.1	57.5	48.0	52.6	54.3	65.5	51.1	51.0	57.8	65.4
	75	56.8	56.9	62.7	69.6	55.6	48.0	61.5	62.1	51.0	51.0	57.8	65.4
3300	60	43.7	43.4	49.1	56.0	47.8	48.8	53.5	56.8	51.8	51.7	58.0	65.0
	65	44.6	49.4	50.1	61.3	47.7	48.2	53.5	61.2	51.8	51.7	58.0	65.0
	70	44.8	44.5	50.3	57.2	48.7	48.5	54.6	61.6	51.7	51.6	58.0	65.0
	75	57.9	58.0	63.4	69.9	57.9	53.5	63.5	66.1	52.8	58.2	59.1	69.9
3600	60	44.2	44.0	49.3	55.7	48.3	48.1	53.7	60.2	52.4	52.3	58.1	64.7
	65	44.1	50.3	49.3	61.5	50.2	48.0	55.0	60.2	52.3	52.2	58.1	64.7
	70	54.8	54.6	59.8	65.9	49.3	54.6	54.8	65.9	52.2	54.2	58.1	65.5
	75	58.9	59.0	64.1	70.1	58.9	59.1	64.2	70.2	53.4	59.1	59.3	70.2

Note: MIN, MAX: The leaving evaporator temperature is affected by the modulating valve position. The MIN and MAX numbers represent modulating valve position impact on both the leaving evaporator temperature and the leaving reheat coil temperature. MAX represents wide open, MIN represents closed to minimum position.

Table 79. Reheat temperature rise – 8.5 tons

Air-flow (cfm)	Ent DB (° F)	Entering Wet Bulb (°F)											
		51				55				59			
		Lvg Evap DB (°F)		Lvg Reheat DB (°F)		Lvg Evap DB (°F)		Lvg Reheat DB (°F)		Lvg Evap DB (°F)		Lvg Reheat DB (°F)	
		MIN	MAX	MIN	MAX	MIN	MAX	MIN	MAX	MIN	MAX	MIN	MAX
Ambient DB 60°F													
2550	60	39.8	42.5	52.7	54.0	44.4	47.0	56.8	57.7	49.1	51.5	60.8	61.6
	65	41.0	46.1	53.9	57.1	44.4	47.0	56.7	57.9	49.0	51.4	60.7	61.6
	70	45.4	50.7	57.8	61.0	45.5	50.7	57.8	61.1	49.0	51.6	60.7	61.7
	75	49.8	55.2	61.6	64.9	49.8	55.3	61.6	65.0	50.0	55.3	61.6	65.0
3060	60	41.4	43.8	52.9	53.9	45.9	48.2	56.8	57.7	50.5	52.6	60.8	61.5
	65	44.0	48.5	55.2	58.0	46.0	48.5	56.9	58.1	50.5	52.6	60.8	61.6
	70	48.4	53.2	59.1	62.1	48.6	53.2	59.2	62.1	50.5	53.3	60.9	62.2
	75	52.9	57.8	63.1	66.2	53.0	57.8	63.2	66.2	53.1	57.9	63.2	66.2
3400	60	42.2	45.0	52.9	54.4	46.7	48.8	56.9	57.6	51.2	53.1	60.8	61.4
	65	45.5	49.8	55.9	58.6	46.8	49.8	56.9	58.6	51.2	53.3	60.8	61.6
	70	50.1	54.5	60.0	62.7	50.1	54.5	60.0	62.7	51.3	54.6	60.9	62.8
	75	54.6	59.1	64.0	66.8	54.7	59.2	64.0	66.9	54.8	59.2	64.1	66.9
3740	60	42.9	46.1	52.9	54.8	47.4	49.3	56.9	57.6	51.9	53.6	60.9	61.3
	65	46.9	50.9	56.5	59.0	47.4	50.9	57.0	59.0	51.9	53.8	60.9	61.5
	70	51.5	55.6	60.7	63.2	51.6	55.6	60.7	63.3	51.9	55.7	61.0	63.3
	75	56.0	60.3	64.7	67.4	56.1	60.3	64.8	67.4	56.2	60.4	64.8	67.5
4080	60	43.5	47.0	53.0	55.1	48.0	49.8	56.9	57.6	52.4	54.0	60.8	61.3
	65	48.1	51.8	57.1	59.4	48.1	51.8	57.1	59.4	52.5	54.2	60.9	61.5
	70	52.7	56.6	61.3	63.7	52.7	56.6	61.3	63.7	52.8	56.7	61.3	63.7
	75	57.3	61.3	65.4	67.9	57.4	61.3	65.5	67.9	57.5	61.4	65.5	68.0
Ambient DB 65°F													
2550	60	39.6	42.4	53.7	54.9	44.3	46.9	57.8	58.7	49.0	51.4	61.8	62.6
	65	40.8	45.9	54.8	58.0	44.3	47.0	57.8	58.8	48.9	51.4	61.7	62.6
	70	45.3	50.5	58.7	62.0	45.4	50.6	58.7	62.0	49.0	51.5	61.8	62.7
	75	49.7	55.1	62.5	65.9	49.8	55.2	62.6	65.9	49.8	55.3	62.6	66.0
3060	60	41.3	43.6	53.8	54.7	45.8	48.1	57.7	58.5	50.4	52.5	61.8	62.4
	65	43.7	48.3	55.9	58.8	45.8	48.3	57.8	58.8	50.4	52.6	61.7	62.4
	70	48.3	53.0	60.0	62.9	48.3	53.1	60.0	63.0	50.4	53.1	61.8	63.0
	75	52.8	57.7	64.0	67.0	52.9	57.7	64.0	67.0	52.9	57.8	64.0	67.1
3400	60	42.1	44.7	53.7	55.0	46.6	48.7	57.7	58.4	51.2	53.1	61.7	62.2
	65	45.3	49.5	56.6	59.3	46.6	49.6	57.8	59.3	51.1	53.2	61.7	62.4
	70	49.9	54.3	60.7	63.5	50.0	54.4	60.7	63.5	51.2	54.4	61.8	63.5
	75	54.5	59.0	64.8	67.6	54.6	59.1	64.8	67.6	54.6	59.1	64.9	67.7
3740	60	42.8	45.8	53.7	55.4	47.2	49.2	57.6	58.3	51.8	53.5	61.6	62.1
	65	46.6	50.6	57.2	59.7	47.3	50.7	57.7	59.7	51.8	53.7	61.7	62.3
	70	51.3	55.4	61.4	63.9	51.3	55.5	61.4	63.9	51.8	55.5	61.8	63.9
	75	55.9	60.2	65.5	68.1	56.0	60.2	65.5	68.2	56.0	60.3	65.5	68.2
4080	60	43.4	46.7	53.6	55.7	47.8	49.7	57.6	58.3	52.3	53.9	61.6	62.0
	65	47.8	51.6	57.6	60.0	47.9	51.6	57.7	60.0	52.4	54.1	61.6	62.2
	70	52.5	56.4	61.9	64.3	52.5	56.4	61.9	64.3	52.7	56.5	62.0	64.4
	75	57.2	61.2	66.1	68.6	57.2	61.2	66.1	68.6	57.3	61.3	66.1	68.6
Ambient DB 70°F													

Table 79. Reheat temperature rise – 8.5 tons (continued)

Air-flow (cfm)	Ent DB (° F)	Entering Wet Bulb (°F)											
		51				55				59			
		Lvg Evap DB (°F)		Lvg Reheat DB (°F)		Lvg Evap DB (°F)		Lvg Reheat DB (°F)		Lvg Evap DB (°F)		Lvg Reheat DB (°F)	
		MIN	MAX	MIN	MAX	MIN	MAX	MIN	MAX	MIN	MAX	MIN	MAX
2550	60	39.5	42.2	54.7	55.9	44.2	46.8	58.8	59.7	48.9	51.4	62.8	63.6
	65	40.5	45.7	55.7	58.9	44.2	46.9	58.8	59.8	48.9	51.3	62.8	63.6
	70	45.0	50.4	59.6	62.9	45.2	50.4	59.7	62.9	48.9	51.4	62.8	63.7
	75	49.5	55.0	63.5	66.9	49.7	55.1	63.6	66.9	49.8	55.2	63.6	66.9
3060	60	41.1	43.5	54.6	55.6	45.7	47.9	58.6	59.4	50.3	52.4	62.6	63.3
	65	43.4	48.0	56.7	59.6	45.7	48.1	58.7	59.6	50.3	52.5	62.6	63.3
	70	48.1	52.8	60.8	63.7	48.1	52.9	60.8	63.7	50.4	52.5	62.7	63.4
	75	52.7	57.5	64.9	67.9	52.7	57.6	64.9	67.9	52.8	57.7	64.9	67.9
3400	60	41.9	44.4	54.5	55.7	46.5	48.6	58.5	59.2	51.1	53.0	62.5	63.1
	65	45.1	49.3	57.3	60.0	46.5	49.3	58.6	60.0	51.0	53.1	62.5	63.2
	70	49.7	54.1	61.5	64.2	49.7	54.2	61.5	64.2	51.1	54.2	62.6	64.2
	75	54.3	58.9	65.6	68.4	54.4	58.9	65.6	68.4	54.5	59.0	65.6	68.4
3740	60	42.6	45.5	54.5	56.0	47.1	49.1	58.4	59.1	51.7	53.4	62.4	62.9
	65	46.4	50.4	57.8	60.3	47.2	50.4	58.5	60.3	51.7	53.6	62.4	63.0
	70	51.1	55.2	62.0	64.6	51.1	55.3	62.0	64.6	51.7	55.3	62.5	64.6
	75	55.8	60.0	66.2	68.8	55.8	60.1	66.3	68.9	55.9	60.1	66.3	68.9
4080	60	43.2	46.4	54.4	56.2	47.7	49.5	58.3	59.0	52.2	53.8	62.3	62.7
	65	47.6	51.3	58.3	60.6	47.8	51.3	58.4	60.6	52.3	54.0	62.4	62.9
	70	52.3	56.2	62.5	64.9	52.4	56.2	62.6	65.0	52.4	56.3	62.6	65.0
	75	57.0	61.0	66.8	69.2	57.1	61.0	66.8	69.3	57.1	61.1	66.8	69.3

Note: MIN, MAX: The leaving evaporator temperature is affected by the modulating valve position. The MIN and MAX numbers represent modulating valve position impact on both the leaving evaporator temperature and the leaving reheat coil temperature. MAX represents wide open, MIN represents closed to minimum position.

Table 80. Reheat temperature rise - 10 tons (WSK120* only)

Air-flow (cfm)	Ent DB (° F)	Entering Wet Bulb (°F)											
		51				55				59			
		Lvg Evap DB (°F)		Lvg Reheat DB (°F)		Lvg Evap DB (°F)		Lvg Reheat DB (°F)		Lvg Evap DB (°F)		Lvg Reheat DB (°F)	
		MIN	MAX	MIN	MAX	MIN	MAX	MIN	MAX	MIN	MAX	MIN	MAX
Ambient DB 60°F													
3000	60	36.0	36.9	47.9	54.2	40.2	41.7	52.8	58.5	44.5	46.4	57.9	62.7
	65	35.9	36.8	48.0	54.2	40.1	41.6	52.8	58.4	44.4	46.4	57.9	62.7
	70	37.9	40.1	50.5	57.2	40.0	41.6	52.9	58.5	44.3	46.3	57.8	62.7
	75	41.2	44.3	54.4	61.1	41.3	44.4	54.5	61.1	44.3	46.3	57.9	62.7
3600	60	38.3	38.9	48.7	54.2	42.5	43.6	53.6	58.4	46.8	48.3	58.5	62.6
	65	38.2	39.3	48.9	54.7	42.4	43.5	53.6	58.4	46.7	48.2	58.5	62.6
	70	41.7	43.6	53.0	58.7	42.4	43.7	53.7	58.7	46.6	48.2	58.5	62.6
	75	45.1	48.0	57.0	62.7	45.2	48.1	57.1	62.7	46.6	48.1	58.6	62.7
4000	60	39.6	39.9	49.2	54.2	43.7	44.5	53.9	58.3	47.9	49.2	58.7	62.6
	65	40.2	41.1	50.2	55.4	43.7	44.5	53.9	58.4	47.9	49.1	58.7	62.5
	70	43.8	45.6	54.3	59.5	43.9	45.7	54.4	59.5	47.9	49.2	58.8	62.6
	75	47.3	50.0	58.4	63.5	47.4	50.1	58.5	63.6	47.8	50.1	58.9	63.6

Table 80. Reheat temperature rise - 10 tons (WSK120* only) (continued)

Air-flow (cfm)	Ent DB (° F)	Entering Wet Bulb (°F)											
		51				55				59			
		Lvg Evap DB (°F)		Lvg Reheat DB (°F)		Lvg Evap DB (°F)		Lvg Reheat DB (°F)		Lvg Evap DB (°F)		Lvg Reheat DB (°F)	
		MIN	MAX	MIN	MAX	MIN	MAX	MIN	MAX	MIN	MAX	MIN	MAX
4400	60	40.6	40.8	49.5	54.1	44.7	45.4	54.1	58.3	48.9	50.0	58.9	62.5
	65	41.9	42.8	51.2	56.0	44.7	45.4	54.2	58.3	48.9	49.9	58.9	62.5
	70	45.6	47.2	55.5	60.2	45.6	47.3	55.5	60.2	48.9	50.0	59.0	62.6
	75	49.2	51.7	59.6	64.3	49.3	51.8	59.7	64.3	49.4	51.8	59.7	64.4
4800	60	41.4	41.6	49.8	54.1	45.5	46.1	54.3	58.2	49.7	50.6	59.0	62.4
	65	43.4	44.2	52.2	56.6	45.5	46.1	54.4	58.3	49.7	50.6	59.0	62.4
	70	47.1	48.7	56.4	60.8	47.2	48.8	56.5	60.8	49.7	50.7	59.2	62.5
	75	50.8	53.2	60.7	65.0	50.9	53.3	60.7	65.0	51.0	53.3	60.8	65.0
Ambient DB 65°F													
3000	60	36.2	36.6	48.5	55.1	40.4	41.5	53.5	59.4	44.7	46.3	58.5	63.7
	65	36.1	36.6	48.6	55.1	40.3	41.4	53.4	59.4	44.6	46.2	58.5	63.7
	70	38.2	39.7	51.2	58.1	40.2	41.4	53.5	59.5	44.5	46.2	58.5	63.7
	75	41.5	44.0	55.2	61.9	41.6	44.1	55.3	62.0	44.5	46.1	58.5	63.7
3600	60	38.5	38.7	49.2	55.0	42.7	43.4	54.1	59.3	46.9	48.1	59.0	63.5
	65	38.6	38.9	49.5	55.3	42.6	43.3	54.1	59.3	46.9	48.1	59.0	63.5
	70	42.0	43.3	53.7	59.4	42.5	43.3	54.2	59.3	46.8	48.0	59.0	63.5
	75	45.5	47.7	57.8	63.4	45.5	47.8	57.8	63.5	46.8	48.0	59.1	63.6
4000	60	39.7	39.8	49.6	54.9	43.9	44.4	54.4	59.1	48.1	49.0	59.2	63.4
	65	40.5	40.8	50.8	56.0	43.8	44.4	54.4	59.2	48.1	49.0	59.2	63.4
	70	44.1	45.2	54.9	60.1	44.2	45.3	55.0	60.2	48.0	49.0	59.3	63.4
	75	47.6	49.7	59.1	64.2	47.7	49.8	59.2	64.3	47.9	49.8	59.4	64.3
4400	60	40.7	40.7	49.9	54.7	44.9	45.2	54.6	59.0	49.1	49.8	59.3	63.2
	65	42.2	42.4	51.8	56.6	44.8	45.2	54.7	59.1	49.0	49.8	59.3	63.2
	70	45.9	46.9	56.0	60.8	45.9	47.0	56.1	60.8	49.0	49.8	59.5	63.3
	75	49.5	51.4	60.3	64.9	49.6	51.5	60.3	65.0	49.6	51.6	60.4	65.0
4800	60	41.6	41.5	50.1	54.6	45.7	45.9	54.7	58.9	49.9	50.5	59.4	63.1
	65	43.7	43.9	52.7	57.1	45.7	45.9	54.8	59.0	49.8	50.5	59.4	63.1
	70	47.4	48.4	57.0	61.4	47.5	48.4	57.0	61.4	49.9	50.5	59.6	63.2
	75	51.1	52.9	61.3	65.6	51.2	53.0	61.3	65.6	51.3	53.1	61.4	65.6
Ambient DB 70°F													
3000	60	36.4	36.5	49.1	55.9	40.6	41.3	54.1	60.4	44.9	46.1	59.2	64.7
	65	36.3	36.4	49.1	56.0	40.5	41.2	54.0	60.4	44.8	46.1	59.1	64.7
	70	38.6	39.3	52.0	58.9	40.5	41.2	54.1	60.4	44.7	46.0	59.1	64.7
	75	41.9	43.7	56.0	62.8	42.0	43.8	56.1	62.8	44.7	46.0	59.2	64.7
3600	60	38.7	38.6	49.8	55.6	42.9	43.2	54.6	60.1	47.1	47.9	59.5	64.4
	65	38.9	38.8	50.2	56.0	42.8	43.2	54.6	60.1	47.1	47.9	59.5	64.4
	70	42.3	42.9	54.3	60.1	42.7	43.1	54.7	60.2	47.0	47.9	59.5	64.4
	75	45.8	47.4	58.5	64.2	45.9	47.5	58.5	64.2	47.0	47.8	59.7	64.5
4000	60	39.9	39.7	50.1	55.5	44.0	44.2	54.8	59.9	48.3	48.9	59.7	64.2
	65	40.8	40.7	51.3	56.6	44.0	44.2	54.9	59.9	48.2	48.9	59.7	64.2
	70	44.4	44.9	55.6	60.8	44.4	45.0	55.6	60.8	48.2	48.9	59.8	64.2
	75	47.9	49.4	59.8	64.9	48.0	49.5	59.8	65.0	48.1	49.5	59.9	65.0

Table 80. Reheat temperature rise - 10 tons (WSK120* only) (continued)

Air-flow (cfm)	Ent DB (° F)	Entering Wet Bulb (°F)											
		51				55				59			
		Lvg Evap DB (°F)		Lvg Reheat DB (°F)		Lvg Evap DB (°F)		Lvg Reheat DB (°F)		Lvg Evap DB (°F)		Lvg Reheat DB (°F)	
		MIN	MAX	MIN	MAX	MIN	MAX	MIN	MAX	MIN	MAX	MIN	MAX
4400	60	40.9	40.7	50.3	55.3	45.0	45.1	55.0	59.7	49.2	49.7	59.8	64.0
	65	42.5	42.3	52.3	57.1	45.0	45.1	55.1	59.8	49.2	49.6	59.8	64.0
	70	46.1	46.6	56.6	61.4	46.2	46.7	56.7	61.4	49.2	49.7	59.9	64.1
	75	49.8	51.1	60.9	65.6	49.9	51.2	60.9	65.6	49.9	51.3	61.0	65.6
4800	60	41.7	41.5	50.5	55.1	45.8	45.8	55.1	59.5	50.0	50.4	59.8	63.8
	65	43.9	43.7	53.2	57.6	45.8	45.8	55.2	59.6	50.0	50.3	59.9	63.8
	70	47.7	48.1	57.5	61.9	47.7	48.1	57.6	61.9	50.0	50.4	60.0	63.9
	75	51.4	52.6	61.9	66.2	51.5	52.7	61.9	66.2	51.5	52.8	62.0	66.2

Note: MIN, MAX: The leaving evaporator temperature is affected by the modulating valve position. The MIN and MAX numbers represent modulating valve position impact on both the leaving evaporator temperature and the leaving reheat coil temperature. MAX represents wide open, MIN represents closed to minimum position.

Table 81. Reheat temperature rise - 10 tons (W/DHK120* and DSK120* only)

Air-flow (cfm)	Ent DB (° F)	Entering Wet Bulb (°F)											
		51				55				59			
		Lvg Evap DB (°F)		Lvg Reheat DB (°F)		Lvg Evap DB (°F)		Lvg Reheat DB (°F)		Lvg Evap DB (°F)		Lvg Reheat DB (°F)	
		MIN	MAX	MIN	MAX	MIN	MAX	MIN	MAX	MIN	MAX	MIN	MAX
Ambient DB 60°F													
3000	60	36.6	36.4	40.9	44.7	40.6	40.4	45.2	49.1	44.6	44.4	49.5	53.6
	65	36.6	36.4	41.0	44.8	40.5	40.3	45.1	49.1	44.5	44.3	49.4	53.5
	70	39.0	38.7	43.5	47.3	40.6	40.3	45.2	49.1	44.5	44.3	49.4	53.5
	75	42.0	41.7	46.8	50.7	42.1	41.8	46.9	50.7	44.4	44.2	49.3	53.4
3600	60	38.8	38.6	42.5	45.7	42.8	42.6	46.7	50.1	46.8	46.6	51.0	54.5
	65	38.8	38.6	42.6	45.8	42.7	42.5	46.7	50.0	46.8	46.6	51.0	54.5
	70	42.5	42.2	46.5	49.7	42.8	42.6	46.8	50.2	46.7	46.5	50.9	54.4
	75	45.7	45.4	49.9	53.2	45.8	45.5	50.0	53.3	46.8	46.6	51.1	54.6
4000	60	39.9	39.7	43.3	46.2	43.9	43.7	47.5	50.6	48.0	47.8	51.8	55.0
	65	41.1	40.8	44.5	47.4	43.9	43.7	47.5	50.5	47.9	47.7	51.7	54.9
	70	44.4	44.1	48.1	51.1	43.9	43.7	47.6	50.7	47.9	47.7	51.7	54.9
	75	47.7	47.4	51.6	54.7	47.8	47.5	51.7	54.7	48.0	47.8	51.9	55.1
4400	60	41.0	40.9	44.1	46.8	44.9	44.7	48.2	51.0	48.9	48.8	52.4	55.3
	65	42.7	42.4	45.9	48.5	45.0	44.6	48.3	51.0	48.9	48.7	52.4	55.3
	70	46.1	45.8	49.5	52.2	46.2	44.7	49.6	51.1	48.8	48.7	52.4	55.3
	75	49.5	49.2	53.1	55.9	49.6	49.3	53.1	56.0	48.9	48.8	52.5	55.5
4800	60	41.8	41.7	44.7	47.2	45.7	45.5	48.7	51.3	49.7	49.6	53.0	55.7
	65	44.0	43.8	47.0	49.5	45.8	45.6	48.9	51.5	49.7	49.5	52.9	55.6
	70	47.5	47.3	50.7	53.3	47.6	47.3	50.8	53.3	49.8	49.7	53.1	55.8
	75	51.0	50.7	54.4	57.0	51.1	50.8	54.5	57.0	49.7	49.6	53.1	55.8
Ambient DB 65°F													
3000	60	36.7	36.5	41.1	45.0	40.7	40.5	45.4	49.4	44.7	44.5	49.7	53.9
	65	36.8	36.5	41.2	45.1	40.6	40.4	45.4	49.4	44.7	44.4	49.7	53.9
	70	39.2	38.8	43.8	47.6	40.7	40.4	45.4	49.5	44.6	44.4	49.7	53.9
	75	42.3	41.9	47.1	51.1	42.3	42.0	47.2	51.1	44.5	44.3	49.6	53.8

Table 81. Reheat temperature rise - 10 tons (W/DHK120* and DSK120* only) (continued)

Air-flow (cfm)	Ent DB (° F)	Entering Wet Bulb (°F)											
		51				55				59			
		Lvg Evap DB (°F)		Lvg Reheat DB (°F)		Lvg Evap DB (°F)		Lvg Reheat DB (°F)		Lvg Evap DB (°F)		Lvg Reheat DB (°F)	
		MIN	MAX	MIN	MAX	MIN	MAX	MIN	MAX	MIN	MAX	MIN	MAX
3600	60	38.9	38.7	42.7	46.0	42.9	42.7	46.9	50.4	47.0	46.7	51.3	54.8
	65	38.9	38.7	42.8	46.1	42.8	42.6	46.9	50.3	46.9	46.7	51.2	54.8
	70	42.7	42.4	46.8	50.1	42.9	42.7	47.0	50.5	46.8	46.6	51.2	54.8
	75	45.9	45.6	50.2	53.6	46.0	45.6	50.3	53.7	46.9	46.7	51.3	54.9
4000	60	40.0	39.8	43.5	46.5	44.0	43.8	47.7	50.8	48.1	47.9	52.0	55.3
	65	41.2	40.9	44.8	47.7	44.0	43.8	47.7	50.8	48.0	47.8	52.0	55.2
	70	44.6	44.3	48.4	51.4	44.0	43.8	47.8	51.0	48.0	47.8	51.9	55.2
	75	48.0	47.6	51.9	55.0	48.0	47.7	52.0	55.1	48.1	47.9	52.1	55.4
4400	60	41.1	40.9	44.3	47.0	45.0	44.8	48.4	51.2	49.0	48.9	52.6	55.6
	65	42.8	42.5	46.1	48.8	45.1	44.9	48.5	51.4	49.0	48.8	52.6	55.6
	70	46.3	46.0	49.8	52.6	46.4	46.0	49.9	52.6	48.9	48.7	52.6	55.6
	75	49.7	49.3	53.4	56.3	49.8	49.4	53.5	56.3	49.0	48.8	52.8	55.8
4800	60	41.9	41.7	44.9	47.4	45.8	45.6	48.9	51.6	49.8	49.7	53.2	55.9
	65	44.2	43.9	47.3	49.8	45.9	45.7	49.1	51.7	49.8	49.6	53.1	55.9
	70	47.7	47.4	51.0	53.6	47.8	47.5	51.1	53.7	49.9	49.8	53.3	56.1
	75	51.2	50.9	54.7	57.4	51.3	51.0	54.8	57.4	51.4	49.6	54.9	56.1
Ambient DB 70°F													
3000	60	36.8	36.6	41.4	45.3	40.8	40.6	45.7	49.8	44.9	44.6	50.0	54.3
	65	36.9	36.6	41.5	45.4	40.8	40.5	45.6	49.7	44.8	44.5	50.0	54.3
	70	39.4	39.0	44.2	48.0	40.8	40.6	45.7	49.8	44.8	44.5	50.0	54.2
	75	42.5	42.1	47.5	51.5	42.6	42.1	47.6	51.6	44.7	44.4	49.9	54.2
3600	60	39.0	38.8	42.9	46.2	43.0	42.8	47.2	50.6	47.1	46.9	51.5	55.1
	65	39.0	38.8	43.0	46.3	43.0	42.7	47.1	50.6	47.0	46.8	51.5	55.1
	70	42.9	42.5	47.1	50.4	43.0	42.8	47.3	50.8	47.0	46.7	51.4	55.1
	75	46.2	45.7	50.6	54.0	46.2	45.8	50.7	54.1	47.1	46.8	51.6	55.2
4000	60	40.1	39.9	43.7	46.7	44.1	43.9	47.9	51.1	48.2	48.0	52.3	55.6
	65	41.4	41.1	45.1	48.0	44.1	43.9	47.9	51.1	48.2	47.9	52.2	55.5
	70	44.8	44.4	48.7	51.7	44.1	43.9	48.0	51.2	48.1	47.9	52.2	55.5
	75	48.2	47.8	52.3	55.4	48.3	47.8	52.4	55.5	48.2	48.0	52.3	55.7
4400	60	41.2	41.0	44.5	47.3	45.1	44.9	48.6	51.5	49.2	49.0	52.9	55.9
	65	43.0	42.7	46.4	49.1	45.2	44.8	48.7	51.4	49.1	48.9	52.8	55.9
	70	46.5	46.1	50.1	52.9	46.6	46.2	50.2	53.0	49.2	48.8	53.0	55.8
	75	49.9	49.5	53.7	56.7	50.0	49.6	53.8	56.7	49.2	48.9	53.0	56.1
4800	60	42.0	41.8	45.1	47.6	45.9	45.7	49.1	51.8	50.0	49.8	53.4	56.2
	65	44.4	44.0	47.6	50.1	46.0	45.8	49.3	52.0	49.9	49.7	53.3	56.2
	70	47.9	47.6	51.3	53.9	48.0	47.6	51.4	54.0	50.0	49.8	53.5	56.3
	75	51.4	51.1	55.0	57.7	51.5	51.1	55.1	57.8	51.6	51.2	55.2	57.8

Note: MIN, MAX: The leaving evaporator temperature is affected by the modulating valve position. The MIN and MAX numbers represent modulating valve position impact on both the leaving evaporator temperature and the leaving reheat coil temperature. MAX represents wide open, MIN represents closed to minimum position.

Table 82. Reheat temperature rise — 12.5 tons

Airflow (cfm)	Ent DB (° F)	Entering Wet Bulb (°F)											
		51				55				59			
		Lvg Evap DB (°F)		Lvg Reheat DB (°F)		Lvg Evap DB (°F)		Lvg Reheat DB (°F)		Lvg Evap DB (°F)		Lvg Reheat DB (°F)	
		MIN	MAX	MIN	MAX	MIN	MAX	MIN	MAX	MIN	MAX	MIN	MAX
Ambient DB 60°F													
3750	60	36.6	36.4	39.5	40.7	40.9	40.7	43.9	45.2	45.2	45.0	48.4	49.7
	65	36.5	36.3	39.7	40.9	40.8	40.5	43.9	45.2	45.1	44.8	48.4	49.7
	70	38.6	38.3	42.1	43.3	40.7	40.5	44.0	45.3	45.0	44.7	48.3	49.7
	75	41.8	41.5	45.6	46.8	41.9	41.6	45.7	46.8	44.9	44.7	48.5	49.8
4500	60	39.0	38.8	41.4	42.5	43.2	43.0	45.8	46.9	47.6	47.4	50.1	51.3
	65	38.8	38.7	41.6	42.7	43.1	43.0	45.7	46.9	47.4	47.2	50.1	51.3
	70	42.3	42.0	45.5	46.5	43.0	42.8	46.0	47.1	47.3	47.1	50.1	51.3
	75	45.7	45.4	49.1	50.1	45.8	45.5	49.2	50.2	47.2	47.0	50.4	51.5
5000	60	40.2	40.0	42.6	43.3	44.4	44.3	46.7	47.7	48.8	48.6	51.0	52.1
	65	40.8	39.8	43.6	43.6	44.3	44.2	46.7	47.7	48.6	48.5	51.0	52.1
	70	44.3	44.1	47.3	48.2	44.2	44.0	46.9	48.0	48.6	48.4	51.0	52.1
	75	47.9	47.5	51.0	51.9	47.9	47.6	51.1	52.0	48.4	48.2	51.3	52.4
5500	60	41.2	41.1	43.4	44.3	45.4	45.3	47.5	48.4	49.8	49.6	51.8	52.7
	65	42.5	42.2	45.1	45.9	45.3	45.2	47.7	48.6	49.6	49.5	51.8	52.8
	70	46.1	45.8	48.9	49.7	46.2	45.9	48.9	49.8	49.6	49.4	52.1	53.0
	75	49.7	49.4	52.7	53.5	49.8	49.5	52.7	53.6	49.4	49.2	52.1	53.1
6000	60	42.0	41.9	44.1	44.9	46.3	46.1	48.1	49.0	50.6	50.5	52.4	53.3
	65	43.9	43.7	46.4	47.1	46.2	46.0	48.4	49.3	50.5	50.3	52.4	53.3
	70	47.6	47.4	50.2	51.0	47.7	47.4	50.3	51.1	50.4	50.2	52.7	53.6
	75	51.3	51.0	54.1	54.9	51.4	51.1	54.2	54.9	51.5	51.2	54.2	55.0
Ambient DB 65°F													
3750	60	36.9	36.7	40.0	41.2	41.2	41.0	44.4	45.7	45.5	45.3	48.8	50.2
	65	36.8	36.6	40.1	41.4	41.1	40.9	44.3	45.7	45.4	45.2	48.8	50.2
	70	39.1	38.7	42.8	43.9	41.0	40.8	44.5	45.8	45.3	45.1	48.8	50.2
	75	42.3	42.0	46.3	47.5	42.4	42.1	46.3	47.6	45.2	45.0	48.9	50.3
4500	60	39.3	39.1	41.8	42.9	43.5	43.3	46.1	47.3	47.9	47.7	50.5	51.7
	65	39.1	38.9	42.0	43.1	43.4	43.2	46.1	47.3	47.7	47.5	50.5	51.8
	70	42.8	42.5	46.1	47.1	43.3	43.1	46.4	47.5	47.6	47.4	50.5	51.7
	75	46.2	45.9	49.7	50.8	46.3	46.0	49.8	50.8	47.5	47.3	50.8	52.0
5000	60	40.4	40.3	42.9	43.9	44.7	44.5	47.0	48.1	49.1	48.9	51.4	52.5
	65	41.2	40.9	44.1	45.0	44.6	44.4	47.2	48.1	48.9	48.7	51.4	52.5
	70	44.8	44.5	47.9	48.8	44.4	44.3	47.3	48.4	48.8	48.6	51.4	52.5
	75	48.3	48.0	51.6	52.6	48.4	48.1	51.7	52.6	48.7	48.5	51.7	52.8
5500	60	41.4	41.3	43.7	44.7	45.7	45.5	47.8	48.7	50.0	49.9	52.1	53.1
	65	42.9	42.6	45.6	46.4	45.6	45.4	48.0	49.0	49.9	49.7	52.1	53.1
	70	46.5	46.2	49.4	50.3	46.6	46.3	49.5	50.3	49.8	49.6	52.4	53.4
	75	50.2	49.8	53.2	54.1	50.2	49.9	53.3	54.2	49.6	49.4	52.5	53.5

Table 82. Reheat temperature rise — 12.5 tons (continued)

6000	60	42.2	42.1	44.4	45.3	46.5	46.3	48.4	49.3	50.8	50.7	52.6	53.6
	65	44.3	44.0	46.8	47.6	46.4	46.2	48.7	49.6	50.7	50.5	52.7	53.7
	70	48.0	47.8	50.7	51.5	48.1	47.8	50.8	51.6	50.6	50.4	53.1	54.0
	75	51.7	51.4	54.6	55.5	51.8	51.5	54.7	55.5	51.9	51.6	54.8	55.6
Ambient DB 70°F													
3750	60	37.2	37.0	40.4	41.7	41.5	41.3	44.8	46.2	45.9	45.6	49.3	50.7
	65	37.1	36.9	40.6	41.9	41.4	41.2	44.8	46.1	45.7	45.5	49.2	50.7
	70	39.6	39.2	43.4	44.6	41.3	41.1	45.0	46.3	45.6	45.4	49.2	50.7
	75	42.9	42.5	46.9	48.2	43.0	42.6	47.0	48.3	45.5	45.3	49.4	50.9
4500	60	39.5	39.3	42.1	43.3	43.8	43.6	46.5	47.7	48.2	48.0	50.9	52.1
	65	39.4	39.2	42.4	43.5	43.7	43.5	46.5	47.7	48.0	47.8	50.9	52.2
	70	43.2	42.9	46.6	47.7	43.5	43.4	46.8	48.0	47.9	47.7	50.9	52.2
	75	46.7	46.3	50.3	51.4	46.8	46.4	50.4	51.5	47.8	47.6	51.2	52.5
5000	60	40.7	40.5	43.3	44.3	44.9	44.8	47.4	48.5	49.3	49.1	51.7	52.8
	65	41.6	41.3	44.6	45.5	44.9	44.7	47.6	48.7	49.1	48.9	51.7	52.9
	70	45.2	44.9	48.4	49.4	44.7	44.5	47.7	48.8	49.1	48.9	51.7	52.9
	75	48.8	48.4	52.2	53.2	48.9	48.5	52.3	53.3	48.9	48.7	52.1	53.2
5500	60	41.6	41.5	44.1	45.0	45.9	45.7	48.1	49.1	50.3	50.1	52.4	53.4
	65	43.3	43.0	46.0	46.9	45.8	45.6	48.4	49.4	50.1	49.9	52.4	53.5
	70	47.0	46.6	49.9	50.8	47.0	46.7	50.0	50.9	50.0	49.8	52.7	53.8
	75	50.6	50.3	53.8	54.7	50.7	50.3	53.9	54.8	49.8	49.6	52.8	53.9
6000	60	42.4	42.3	44.7	45.6	46.7	46.5	48.7	49.6	51.1	50.9	52.9	53.9
	65	44.7	44.4	47.3	48.1	46.6	46.4	49.0	49.9	50.9	50.7	53.0	54.0
	70	48.4	48.1	51.2	52.1	48.5	48.2	51.3	52.1	50.8	50.6	53.4	54.4
	75	52.2	51.8	55.2	56.0	52.3	51.9	55.2	56.1	52.3	52.0	55.3	56.1

Note: MIN, MAX: The leaving evaporator temperature is affected by the modulating valve position. The MIN and MAX numbers represent modulating valve position impact on both the leaving evaporator temperature and the leaving reheat coil temperature. MAX represents wide open, MIN represents closed to minimum position.

Table 83. Reheat temperature rise — 15 tons

Airflow (cfm)	Ent DB (° F)	Entering Wet Bulb (°F)											
		51				55				59			
		Lvg Evap DB (°F)		Lvg Reheat DB (°F)		Lvg Evap DB (°F)		Lvg Reheat DB (°F)		Lvg Evap DB (°F)		Lvg Reheat DB (°F)	
		MIN	MAX	MIN	MAX	MIN	MAX	MIN	MAX	MIN	MAX	MIN	MAX
Ambient DB 60°F													
4500	60	37.4	37.2	39.3	40.1	41.6	41.5	43.7	44.6	45.9	45.7	48.1	49.2
	65	37.3	37.2	39.3	40.1	41.6	41.4	43.6	44.6	45.9	45.7	48.1	49.1
	70	39.8	39.5	42.3	43.1	41.5	41.3	43.6	44.6	45.8	45.6	48.0	49.1
	75	43.1	42.8	45.8	46.7	43.2	42.9	45.9	46.8	45.7	45.6	48.0	49.0
5400	60	39.7	39.5	41.2	42.0	43.9	43.7	45.5	46.4	48.2	48.0	49.9	50.8
	65	39.5	39.3	41.2	42.0	43.8	43.7	45.5	46.4	48.1	48.0	49.9	50.8
	70	43.4	43.2	45.7	46.5	43.7	43.6	45.5	46.4	48.1	47.9	49.9	50.8
	75	47.0	46.7	49.4	50.1	47.0	46.8	49.4	50.2	48.0	47.8	49.9	50.8

Table 83. Reheat temperature rise — 15 tons (continued)

Airflow (cfm)	Ent DB (° F)	Entering Wet Bulb (°F)											
		51				55				59			
		Lvg Evap DB (°F)		Lvg Reheat DB (°F)		Lvg Evap DB (°F)		Lvg Reheat DB (°F)		Lvg Evap DB (°F)		Lvg Reheat DB (°F)	
		MIN	MAX	MIN	MAX	MIN	MAX	MIN	MAX	MIN	MAX	MIN	MAX
6000	60	40.8	40.7	42.2	42.9	45.0	44.9	46.5	47.3	49.3	49.2	50.9	51.7
	65	41.8	41.6	43.8	44.4	45.0	44.9	46.5	47.2	49.3	49.1	50.8	51.7
	70	45.4	45.2	47.5	48.2	44.8	44.7	46.5	47.3	49.2	49.1	50.8	51.6
	75	49.1	48.8	51.3	52.0	49.1	48.9	51.4	52.1	49.1	48.9	50.8	51.7
6600	60	41.8	41.6	43.0	43.6	46.0	45.9	47.3	48.0	50.2	50.1	51.6	52.4
	65	43.4	43.2	45.3	45.9	45.9	45.8	47.2	47.9	50.2	50.1	51.6	52.3
	70	47.2	46.9	49.1	49.8	47.2	47.0	49.2	49.8	50.2	50.0	51.5	52.3
	75	50.9	50.6	53.0	53.6	50.9	50.7	53.0	53.7	51.0	49.8	53.1	52.4
7200	60	42.6	42.4	43.7	44.3	46.8	46.7	47.9	48.6	51.0	50.9	52.2	52.9
	65	44.9	44.7	46.6	47.1	46.7	46.6	48.0	48.6	51.0	50.9	52.2	52.9
	70	48.6	48.4	50.5	51.1	48.7	48.5	50.6	51.2	50.9	50.8	52.3	53.0
	75	52.4	52.2	54.4	55.0	52.5	52.2	54.5	55.1	52.6	52.3	54.6	55.2
Ambient DB 65°F													
4500	60	37.7	36.3	39.7	48.6	42.0	40.5	44.1	53.5	46.3	44.7	48.5	58.4
	65	37.6	36.2	39.7	48.6	41.9	40.4	44.0	53.4	46.2	44.7	48.5	58.3
	70	40.3	38.0	42.9	51.2	41.8	40.3	44.0	53.4	46.2	44.6	48.4	58.3
	75	43.7	41.2	46.4	55.0	43.8	41.3	46.5	55.0	46.1	44.5	48.4	58.3
5400	60	39.9	38.7	41.5	49.2	44.2	42.9	45.9	53.9	48.4	47.1	50.3	58.7
	65	40.4	38.6	42.5	49.2	44.1	42.8	45.8	53.9	48.4	47.1	50.2	58.7
	70	43.9	41.8	46.3	53.3	44.0	42.7	45.9	53.9	48.4	47.0	50.2	58.7
	75	47.5	45.1	50.0	57.3	47.6	45.2	50.0	57.3	48.3	46.9	50.3	58.7
6000	60	41.1	39.9	42.5	49.4	45.3	44.1	46.8	54.1	49.6	48.3	51.2	58.9
	65	42.3	39.7	44.3	49.5	45.2	44.1	46.8	54.1	49.5	48.3	51.1	58.9
	70	45.9	43.8	48.1	54.5	46.0	43.9	48.1	54.2	49.5	48.3	51.1	58.9
	75	49.6	47.3	51.9	58.5	49.6	47.4	51.9	58.6	49.3	48.1	51.2	58.9
6600	60	42.0	41.0	43.3	49.7	46.2	45.1	47.5	54.3	50.4	49.4	51.9	59.0
	65	43.9	42.0	45.7	51.5	46.2	45.1	47.6	54.3	50.4	49.3	51.9	59.0
	70	47.6	45.6	49.6	55.5	47.7	44.8	49.7	54.4	50.4	49.3	51.9	59.0
	75	51.3	49.1	53.5	59.6	51.4	49.2	53.6	59.7	51.4	49.1	53.6	59.1
7200	60	42.8	41.8	44.0	49.9	47.0	46.0	48.2	54.4	51.2	50.2	52.5	59.1
	65	45.2	43.5	47.0	52.3	46.9	45.9	48.2	54.4	51.2	50.2	52.5	59.1
	70	49.0	47.1	50.9	56.5	49.1	47.2	51.0	56.5	51.2	50.1	52.5	59.1
	75	52.8	50.7	54.9	60.6	53.0	50.8	55.0	60.6	53.0	49.9	55.1	59.2
Ambient DB 70°F													
4500	60	38.0	36.6	40.0	49.2	42.3	40.7	44.5	54.0	46.6	45.0	48.9	59.0
	65	37.9	36.5	40.0	49.2	42.2	40.7	44.4	54.0	46.5	44.9	48.9	58.9
	70	40.9	38.4	43.5	51.9	42.2	40.6	44.4	53.9	46.5	44.9	48.8	58.9
	75	44.3	41.6	47.1	55.7	44.3	41.7	47.2	55.8	46.4	44.8	48.9	58.9

Table 83. Reheat temperature rise — 15 tons (continued)

Airflow (cfm)	Ent DB (° F)	Entering Wet Bulb (°F)											
		51				55				59			
		Lvg Evap DB (°F)		Lvg Reheat DB (°F)		Lvg Evap DB (°F)		Lvg Reheat DB (°F)		Lvg Evap DB (°F)		Lvg Reheat DB (°F)	
		MIN	MAX	MIN	MAX	MIN	MAX	MIN	MAX	MIN	MAX	MIN	MAX
5400	60	40.2	38.9	41.9	49.6	44.5	43.1	46.2	54.4	48.7	47.3	50.6	59.3
	65	40.9	38.8	43.1	49.7	44.4	43.1	46.2	54.4	48.7	47.3	50.6	59.2
	70	44.5	42.1	46.8	54.0	44.3	42.9	46.2	54.4	48.7	47.2	50.6	59.2
	75	47.9	45.5	50.5	58.0	48.1	45.6	50.7	58.0	48.5	47.1	50.6	59.3
6000	60	41.3	40.1	42.8	49.9	45.6	44.3	47.1	54.6	49.8	48.5	51.5	59.4
	65	42.7	39.9	44.8	49.9	45.5	44.3	47.1	54.6	49.8	48.5	51.4	59.4
	70	46.4	44.2	48.6	55.2	46.5	44.1	48.7	54.7	49.7	48.4	51.4	59.3
	75	50.0	47.6	52.4	59.2	50.1	47.7	52.5	59.2	49.6	48.3	51.5	59.5
6600	60	42.2	41.1	43.6	50.0	46.5	45.3	47.8	54.7	50.7	49.5	52.2	59.5
	65	44.3	42.3	46.2	52.0	46.4	45.3	47.9	54.7	50.7	49.5	52.2	59.5
	70	48.0	45.9	50.1	56.2	48.1	46.0	50.2	56.2	50.6	49.4	52.2	59.4
	75	51.7	49.5	54.0	60.3	51.9	49.5	54.1	60.4	52.0	49.3	54.2	59.6
7200	60	43.0	42.0	44.2	50.3	47.2	46.2	48.4	54.8	51.4	50.4	52.7	59.6
	65	45.7	43.8	47.5	52.9	47.2	46.1	48.5	54.9	51.4	50.3	52.7	59.6
	70	49.4	47.4	51.4	57.1	49.6	47.5	51.5	57.1	51.4	50.3	52.8	59.6
	75	53.3	51.1	55.4	61.2	53.4	51.1	55.5	61.2	53.5	51.2	55.6	61.3

Note: MIN, MAX: The leaving evaporator temperature is affected by the modulating valve position. The MIN and MAX numbers represent modulating valve position impact on both the leaving evaporator temperature and the leaving reheat coil temperature. MAX represents wide open, MIN represents closed to minimum position.

Table 84. Reheat temperature rise — 17.5 tons

Airflow (cfm)	Ent DB (° F)	Entering Wet Bulb (°F)											
		51				55				59			
		Lvg Evap DB (°F)		Lvg Reheat DB (°F)		Lvg Evap DB (°F)		Lvg Reheat DB (°F)		Lvg Evap DB (°F)		Lvg Reheat DB (°F)	
		MIN	MAX	MIN	MAX	MIN	MAX	MIN	MAX	MIN	MAX	MIN	MAX
Ambient DB 60°F													
5250	60	37.1	36.9	38.8	39.5	41.3	41.1	43.1	44.0	45.6	45.5	47.5	48.5
	65	37.0	36.9	38.8	39.6	41.3	41.1	43.1	44.0	45.5	45.4	47.4	48.4
	70	39.2	39.1	41.5	42.3	41.1	41.1	43.0	43.9	45.5	45.3	47.4	48.4
	75	42.5	42.2	44.9	45.8	42.6	42.3	45.0	45.8	45.5	45.3	47.4	48.3
6300	60	39.4	39.2	40.7	41.4	43.6	43.5	45.1	45.8	48.1	47.8	49.5	50.2
	65	39.2	39.1	40.7	41.4	43.6	43.5	45.0	45.8	48.0	47.8	49.5	50.2
	70	42.9	42.7	44.9	45.6	43.4	43.3	45.0	45.8	48.0	47.7	49.4	50.2
	75	46.8	46.3	48.8	49.4	46.9	46.4	48.9	49.4	47.9	47.5	49.4	50.2
7000	60	40.5	40.5	41.7	42.4	44.8	44.7	46.0	46.8	49.2	49.1	50.5	51.2
	65	41.4	41.2	43.2	43.8	44.8	44.7	46.0	46.7	49.2	49.1	50.4	51.1
	70	45.0	44.8	46.9	47.5	44.6	44.5	46.0	46.7	49.1	49.0	50.4	51.1
	75	48.9	48.7	50.8	51.4	49.0	48.7	50.9	51.5	49.0	48.9	50.4	51.1

Table 84. Reheat temperature rise — 17.5 tons (continued)

Airflow (cfm)	Ent DB (° F)	Entering Wet Bulb (°F)											
		51				55				59			
		Lvg Evap DB (°F)		Lvg Reheat DB (°F)		Lvg Evap DB (°F)		Lvg Reheat DB (°F)		Lvg Evap DB (°F)		Lvg Reheat DB (°F)	
		MIN	MAX	MIN	MAX	MIN	MAX	MIN	MAX	MIN	MAX	MIN	MAX
7700	60	41.5	41.5	42.6	43.2	45.8	45.7	46.9	47.5	50.2	50.1	51.2	51.9
	65	43.1	42.9	44.7	45.3	45.7	45.6	46.8	47.5	50.1	50.0	51.2	51.9
	70	47.0	46.5	48.7	49.0	47.1	46.7	48.8	49.2	50.1	50.0	51.2	51.8
	75	50.7	50.5	52.5	53.1	50.8	50.6	52.6	53.2	49.9	49.8	51.2	51.9
8400	60	42.4	42.3	43.3	43.9	46.6	46.4	47.5	48.1	51.0	50.9	51.9	52.5
	65	44.5	44.3	46.0	46.5	46.5	46.4	47.6	48.2	50.9	50.8	51.9	52.5
	70	48.5	48.1	50.1	50.5	48.6	48.1	50.2	50.5	50.9	50.8	51.9	52.5
	75	52.3	52.1	54.0	54.5	52.4	52.2	54.1	54.6	52.5	52.2	54.1	54.7
Ambient DB 65°F													
5250	60	37.4	36.2	39.1	47.5	41.7	40.4	43.5	52.2	46.0	44.6	47.9	57.1
	65	37.3	36.1	39.1	47.5	41.6	40.4	43.4	52.2	45.8	44.6	47.8	57.0
	70	39.7	37.9	42.0	49.9	41.5	40.3	43.4	52.1	45.8	44.5	47.8	57.0
	75	43.1	41.0	45.6	53.6	43.1	41.1	45.6	53.7	45.8	44.5	47.8	57.0
6300	60	39.6	38.7	41.1	48.2	43.9	42.8	45.4	52.9	48.4	47.1	49.8	57.6
	65	39.4	38.5	41.0	48.2	43.8	42.8	45.3	52.8	48.3	47.0	49.8	57.5
	70	43.5	41.7	45.6	52.2	43.7	42.6	45.3	52.9	48.3	47.0	49.8	57.6
	75	47.3	45.0	49.4	56.1	47.4	45.1	49.5	56.1	48.1	46.9	49.8	57.6
7000	60	40.8	39.9	42.0	48.5	45.1	44.1	46.3	53.2	49.5	48.3	50.8	57.9
	65	41.8	39.6	43.6	48.6	45.0	44.0	46.3	53.1	49.4	48.3	50.7	57.8
	70	45.5	43.7	47.4	53.5	44.8	43.8	46.3	53.2	49.4	48.2	50.7	57.8
	75	49.4	47.2	51.4	57.4	49.5	47.3	51.4	57.5	49.2	48.1	50.7	57.8
7700	60	41.8	40.9	42.8	48.8	46.0	45.1	47.1	53.4	50.4	49.3	51.5	58.1
	65	43.5	41.9	45.2	50.6	46.0	45.0	47.1	53.4	50.4	49.3	51.5	58.0
	70	47.5	45.5	49.2	54.6	47.5	44.8	49.3	53.5	50.3	49.2	51.5	58.0
	75	51.2	49.1	53.0	58.6	51.3	49.1	53.1	58.7	50.1	49.0	51.5	58.1
8400	60	42.6	41.8	43.6	49.0	46.8	45.9	47.8	53.6	51.2	50.2	52.1	58.2
	65	44.9	43.4	46.5	51.5	46.8	45.9	47.8	53.6	51.1	50.1	52.1	58.2
	70	48.9	47.1	50.6	55.6	49.0	47.1	50.6	55.6	51.1	50.1	52.2	58.2
	75	52.7	50.7	54.5	59.6	52.8	50.8	54.6	59.7	52.9	49.8	54.6	58.3
Ambient DB 70°F													
5250	60	37.7	36.5	39.5	48.0	41.9	40.7	43.8	52.8	46.2	44.9	48.2	57.7
	65	37.6	36.4	39.5	48.0	41.9	40.6	43.8	52.7	46.2	44.9	48.2	57.6
	70	40.3	38.3	42.7	50.6	41.8	40.5	43.8	52.7	46.1	44.8	48.2	57.6
	75	43.7	41.5	46.2	54.4	43.7	41.6	46.2	54.5	46.1	44.7	48.2	57.5
6300	60	39.9	38.9	41.4	48.6	44.1	43.1	45.7	53.3	48.6	47.3	50.2	58.1
	65	39.7	38.7	41.3	48.7	44.2	43.0	45.7	53.3	48.6	47.2	50.1	58.0
	70	43.9	42.0	46.0	52.9	44.0	42.9	45.7	53.4	48.6	47.2	50.1	58.1
	75	47.8	45.4	50.0	56.8	47.9	45.5	50.1	56.8	48.4	47.1	50.1	58.1

Table 84. Reheat temperature rise — 17.5 tons (continued)

Airflow (cfm)	Ent DB (° F)	Entering Wet Bulb (°F)											
		51				55				59			
		Lvg Evap DB (°F)		Lvg Reheat DB (°F)		Lvg Evap DB (°F)		Lvg Reheat DB (°F)		Lvg Evap DB (°F)		Lvg Reheat DB (°F)	
		MIN	MAX	MIN	MAX	MIN	MAX	MIN	MAX	MIN	MAX	MIN	MAX
7000	60	41.0	40.1	42.3	49.0	45.3	44.3	46.6	53.6	49.7	48.5	51.1	58.4
	65	42.3	39.8	44.1	49.0	45.3	44.2	46.6	53.6	49.7	48.5	51.0	58.3
	70	46.0	44.1	47.9	54.1	45.0	44.0	46.6	53.7	49.7	48.4	51.0	58.3
	75	49.9	47.5	51.9	58.1	50.0	47.6	52.0	58.2	49.5	48.3	51.0	58.4
7700	60	42.0	41.1	43.1	49.2	46.3	45.3	47.4	53.8	50.6	49.5	51.8	58.5
	65	43.8	42.2	45.5	51.1	46.2	45.2	47.4	53.8	50.6	49.5	51.8	58.5
	70	47.9	45.8	49.7	55.2	48.0	44.9	49.8	54.0	50.6	49.4	51.7	58.5
	75	51.7	49.4	53.6	59.3	51.7	49.5	53.6	59.3	51.8	49.2	53.7	58.6
8400	60	42.8	41.9	43.8	49.4	47.0	46.1	48.0	54.0	51.4	50.3	52.4	58.7
	65	45.2	43.7	46.8	52.0	47.0	46.1	48.1	54.0	51.4	50.3	52.4	58.6
	70	49.4	47.4	51.0	56.2	49.4	47.4	51.1	56.2	51.3	50.2	52.4	58.7
	75	53.2	51.0	55.0	60.3	53.3	51.1	55.1	60.4	53.3	50.0	55.1	58.7

Note: MIN, MAX: The leaving evaporator temperature is affected by the modulating valve position. The MIN and MAX numbers represent modulating valve position impact on both the leaving evaporator temperature and the leaving reheat coil temperature. MAX represents wide open, MIN represents closed to minimum position.

Table 85. Reheat temperature rise — 20 tons

Airflow (cfm)	Ent DB (° F)	Entering Wet Bulb (°F)											
		51				55				59			
		Lvg Evap DB (°F)		Lvg Reheat DB (°F)		Lvg Evap DB (°F)		Lvg Reheat DB (°F)		Lvg Evap DB (°F)		Lvg Reheat DB (°F)	
		MIN	MAX	MIN	MAX	MIN	MAX	MIN	MAX	MIN	MAX	MIN	MAX
Ambient DB 60°F													
6000	60	36.8	37.6	39.2	41.1	42.1	41.8	44.5	45.4	46.4	46.2	48.8	50.0
	65	37.7	37.5	40.1	41.2	42.1	41.8	44.4	45.5	46.4	46.2	48.9	50.1
	70	40.4	39.9	43.2	44.1	42.0	41.7	44.4	45.6	46.3	46.1	48.9	50.1
	75	43.7	42.9	46.8	47.4	43.8	43.4	46.8	47.9	46.2	46.0	48.9	50.1
7200	60	39.2	39.1	41.3	42.2	43.6	43.4	45.7	46.6	47.9	47.7	50.0	51.0
	65	39.0	38.9	41.3	42.3	43.5	43.4	45.6	46.7	47.8	47.6	50.0	51.1
	70	42.7	42.5	45.4	46.3	43.4	43.2	45.6	46.8	47.8	47.6	50.1	51.2
	75	45.7	45.9	48.7	50.0	46.3	45.9	49.1	50.1	47.6	47.4	50.2	51.3
8000	60	40.4	40.3	42.3	43.2	44.8	44.6	46.6	47.5	49.0	48.9	50.9	51.9
	65	41.2	40.8	43.5	44.1	44.7	44.6	46.5	47.6	49.0	48.8	51.0	52.0
	70	44.8	44.5	47.3	48.1	44.4	44.3	46.5	47.7	48.9	48.8	51.1	52.0
	75	48.3	48.0	51.0	51.9	48.4	48.1	51.1	51.9	48.7	48.6	51.2	52.2
8800	60	41.5	41.3	43.1	43.9	45.7	45.6	47.4	48.2	50.0	49.8	51.7	52.5
	65	42.9	42.6	45.1	45.8	45.7	45.5	47.3	48.3	49.9	49.8	51.7	52.7
	70	46.5	46.3	48.9	49.6	46.6	46.3	49.0	49.7	49.9	49.7	51.9	52.8
	75	50.2	49.8	52.7	53.5	50.2	49.9	52.8	53.5	50.3	49.5	52.8	52.9

Table 85. Reheat temperature rise — 20 tons (continued)

Airflow (cfm)	Ent DB (° F)	Entering Wet Bulb (°F)											
		51				55				59			
		Lvg Evap DB (°F)		Lvg Reheat DB (°F)		Lvg Evap DB (°F)		Lvg Reheat DB (°F)		Lvg Evap DB (°F)		Lvg Reheat DB (°F)	
		MIN	MAX	MIN	MAX	MIN	MAX	MIN	MAX	MIN	MAX	MIN	MAX
9600	60	42.3	42.1	43.8	44.5	46.6	46.4	48.1	48.8	50.8	50.7	52.4	53.1
	65	44.3	44.1	46.4	47.0	46.5	46.3	48.1	49.0	50.8	50.6	52.3	53.2
	70	48.1	47.4	50.3	50.7	48.1	47.9	50.3	51.0	50.7	50.5	52.4	53.4
	75	51.8	51.5	54.2	54.9	51.8	51.5	54.2	54.9	51.9	51.6	54.3	55.0
Ambient DB 65°F													
6000	60	38.1	37.0	40.4	50.6	42.4	41.1	44.8	55.4	46.7	45.4	49.2	60.1
	65	37.9	36.8	40.5	50.7	42.4	41.1	44.9	55.4	46.7	45.3	49.3	60.2
	70	40.8	38.7	43.8	53.4	42.2	41.0	45.0	55.4	46.6	45.3	49.3	60.3
	75	44.2	42.0	47.4	57.2	44.3	42.0	47.5	57.3	46.5	45.2	49.3	60.3
7200	60	39.5	38.5	41.6	50.8	43.9	42.7	46.0	55.5	48.1	46.9	50.3	60.2
	65	39.2	38.3	41.6	50.9	43.8	42.6	46.1	55.6	48.1	46.9	50.4	60.3
	70	43.2	41.2	46.0	54.6	43.6	42.4	46.0	55.7	48.0	46.8	50.5	60.3
	75	46.7	44.5	49.7	58.5	46.7	44.6	49.7	58.6	47.9	46.7	50.6	60.4
8000	60	40.6	39.7	42.6	51.0	45.0	43.9	46.9	55.6	49.3	48.1	51.2	60.2
	65	41.6	39.4	44.0	51.1	44.9	43.8	47.0	55.7	49.2	48.1	51.3	60.3
	70	45.2	43.2	47.8	55.7	45.3	43.6	47.9	55.8	49.2	48.0	51.4	60.4
	75	48.8	46.6	51.6	59.6	48.9	46.7	51.7	59.7	49.0	47.9	51.5	60.6
8800	60	41.7	40.7	43.4	51.1	46.0	44.9	47.7	55.6	50.2	49.2	51.9	60.2
	65	43.3	41.4	45.5	52.6	45.9	44.9	47.6	55.7	50.2	49.1	52.1	60.3
	70	46.9	45.0	49.4	56.6	47.0	44.5	49.5	56.0	50.1	49.0	52.2	60.5
	75	50.6	48.5	53.3	60.6	50.7	48.6	53.3	60.7	50.8	48.8	53.4	60.7
9600	60	42.5	41.6	44.0	51.2	46.8	45.8	48.3	55.7	51.0	50.0	52.6	60.2
	65	44.7	43.0	46.8	53.3	46.7	45.7	48.5	55.8	51.0	50.0	52.7	60.3
	70	48.5	46.6	50.8	57.4	48.5	46.5	50.8	57.5	50.9	49.9	52.8	60.5
	75	52.2	50.2	54.7	61.5	52.3	50.2	54.8	61.5	52.3	49.6	54.8	60.8
Ambient DB 70°F													
6000	60	38.4	37.2	40.8	51.2	42.7	41.3	45.3	56.0	47.0	45.6	49.6	60.8
	65	38.2	37.0	40.9	51.2	42.7	41.3	45.2	56.0	47.0	45.5	49.7	60.9
	70	41.3	39.0	44.4	54.1	42.5	41.1	45.2	56.0	46.9	45.5	49.7	60.9
	75	44.2	42.3	47.7	58.0	44.8	42.4	48.1	58.0	46.8	45.4	49.8	61.0
7200	60	39.8	38.7	42.0	51.3	44.1	42.8	46.3	56.0	48.4	47.1	50.7	60.8
	65	40.0	38.4	42.7	51.4	44.1	42.8	46.4	56.1	48.3	47.0	50.8	60.9
	70	43.7	41.4	46.5	55.3	43.9	42.6	46.5	56.2	48.3	47.0	50.9	60.9
	75	47.2	44.8	50.3	59.2	47.2	44.9	50.4	59.3	48.1	46.8	51.0	61.1
8000	60	40.9	39.9	42.9	51.4	45.2	44.1	47.2	56.1	49.5	48.3	51.6	60.8
	65	42.0	40.0	44.5	52.2	45.2	44.0	47.3	56.2	49.5	48.2	51.7	60.9
	70	45.6	43.5	48.4	56.3	45.7	43.8	48.4	56.3	49.4	48.2	51.8	60.9
	75	49.2	46.9	52.2	60.3	49.3	47.0	52.3	60.4	49.2	48.0	51.9	61.1

Table 85. Reheat temperature rise — 20 tons (continued)

Airflow (cfm)	Ent DB (° F)	Entering Wet Bulb (°F)											
		51				55				59			
		Lvg Evap DB (°F)		Lvg Reheat DB (°F)		Lvg Evap DB (°F)		Lvg Reheat DB (°F)		Lvg Evap DB (°F)		Lvg Reheat DB (°F)	
		MIN	MAX	MIN	MAX	MIN	MAX	MIN	MAX	MIN	MAX	MIN	MAX
8800	60	41.9	40.9	43.6	51.5	46.2	45.1	48.0	56.1	50.4	49.3	52.3	60.7
	65	43.6	41.7	46.0	53.1	46.1	45.0	48.1	56.2	50.4	49.3	52.4	60.8
	70	47.4	45.3	49.9	57.2	47.4	45.3	50.0	57.2	50.3	49.2	52.5	60.9
	75	51.0	48.8	53.8	61.3	51.1	48.9	53.9	61.3	51.2	49.0	54.0	61.2
9600	60	42.7	41.7	44.3	51.6	47.0	45.9	48.6	56.1	51.2	50.1	52.9	60.7
	65	45.1	43.2	47.3	53.8	46.9	45.8	48.8	56.2	51.2	50.1	53.0	60.8
	70	48.8	46.8	51.3	58.0	48.9	46.8	51.3	58.0	51.1	50.0	53.0	60.9
	75	52.6	50.4	55.3	62.1	52.7	50.5	55.3	62.1	52.8	50.6	55.4	62.2

Note: MIN, MAX: The leaving evaporator temperature is affected by the modulating valve position. The MIN and MAX numbers represent modulating valve position impact on both the leaving evaporator temperature and the leaving reheat coil temperature. MAX represents wide open, MIN represents closed to minimum position.

Table 86. Reheat temperature rise — 25 tons

Airflow (cfm)	Ent DB (° F)	Entering Wet Bulb (°F)											
		51				55				59			
		Lvg Evap DB (°F)		Lvg Reheat DB (°F)		Lvg Evap DB (°F)		Lvg Reheat DB (°F)		Lvg Evap DB (°F)		Lvg Reheat DB (°F)	
		MIN	MAX	MIN	MAX	MIN	MAX	MIN	MAX	MIN	MAX	MIN	MAX
Ambient DB 60°F													
7500	60	39.0	38.8	41.0	42.0	43.2	43.0	45.4	46.5	47.5	47.3	49.9	51.0
	65	38.8	38.7	41.0	42.0	43.2	43.0	45.4	46.4	47.5	47.3	49.9	50.9
	70	42.4	42.1	45.2	46.1	43.1	42.9	45.4	46.4	47.4	47.2	49.8	50.9
	75	45.9	45.6	48.9	49.8	46.0	45.7	48.9	49.9	47.3	47.2	49.8	50.9
9000	60	41.0	40.9	42.7	43.5	45.2	45.1	47.0	47.9	49.5	49.4	51.4	52.4
	65	40.7	40.6	42.6	43.5	45.2	45.1	47.0	47.9	49.5	49.3	51.4	52.3
	70	45.9	45.6	48.4	49.1	45.0	44.9	47.0	47.9	49.4	49.3	51.4	52.3
	75	49.6	49.3	52.2	53.0	49.7	49.4	52.3	53.1	49.3	49.1	51.4	52.4
10000	60	42.0	41.9	43.5	44.3	46.3	46.1	47.9	48.6	50.5	50.4	52.2	53.1
	65	44.0	43.8	46.1	46.8	46.2	46.1	47.8	48.6	50.5	50.4	52.2	53.1
	70	47.8	47.5	50.1	50.8	47.9	45.8	50.1	48.6	50.5	50.3	52.2	53.0
	75	51.6	51.3	54.0	54.7	51.6	51.4	54.1	54.8	50.2	50.1	52.2	53.1
11000	60	42.9	42.8	44.3	45.0	47.1	47.0	48.5	49.2	51.4	51.2	52.9	53.6
	65	45.5	45.3	47.5	48.1	47.1	46.9	48.6	49.3	51.3	51.2	52.8	53.6
	70	49.4	49.2	51.5	52.2	49.5	49.2	51.6	52.2	51.3	51.2	52.9	53.7
	75	53.3	53.0	55.6	56.2	53.3	53.0	55.6	56.3	53.4	50.9	55.7	53.7
12000	60	43.6	43.5	44.9	45.5	47.8	47.7	49.1	49.7	52.1	51.9	53.4	54.1
	65	46.9	46.7	48.7	49.3	47.8	47.6	49.1	49.8	52.0	51.9	53.4	54.1
	70	50.8	50.6	52.8	53.4	50.9	50.6	52.9	53.5	52.0	51.9	53.5	54.2
	75	54.7	54.5	56.9	57.5	54.8	54.5	56.9	57.5	54.9	54.6	57.0	57.6
Ambient DB 65°F													

Table 86. Reheat temperature rise — 25 tons (continued)

Airflow (cfm)	Ent DB (° F)	Entering Wet Bulb (°F)											
		51				55				59			
		Lvg Evap DB (°F)		Lvg Reheat DB (°F)		Lvg Evap DB (°F)		Lvg Reheat DB (°F)		Lvg Evap DB (°F)		Lvg Reheat DB (°F)	
		MIN	MAX	MIN	MAX	MIN	MAX	MIN	MAX	MIN	MAX	MIN	MAX
7500	60	39.3	37.9	41.4	51.1	43.5	42.1	45.8	55.6	47.8	46.4	50.3	60.1
	65	39.1	38.2	41.4	51.4	43.5	42.1	45.8	55.9	47.8	46.3	50.2	60.5
	70	42.9	40.6	45.7	54.2	43.3	42.4	45.8	56.3	47.7	46.4	50.2	60.8
	75	46.4	44.0	49.5	58.2	46.5	44.1	49.6	58.3	47.6	46.7	50.2	61.2
9000	60	41.2	40.2	43.0	51.5	45.5	44.3	47.4	55.8	49.8	48.5	51.8	60.2
	65	42.6	40.6	45.0	52.0	45.4	44.4	47.3	56.3	49.7	48.5	51.8	60.6
	70	46.4	44.2	48.9	56.1	45.2	44.8	47.3	56.8	49.7	48.7	51.7	61.1
	75	50.1	47.8	52.8	60.2	50.1	47.8	52.9	60.2	49.5	49.1	51.8	61.5
10000	60	42.2	41.4	43.8	51.7	46.5	45.4	48.1	55.9	50.8	49.6	52.5	60.2
	65	44.4	41.7	46.6	52.3	46.4	45.6	48.1	56.4	50.7	49.6	52.5	60.7
	70	48.2	46.1	50.6	57.1	48.3	46.0	50.7	57.0	50.7	49.9	52.5	61.2
	75	52.0	49.8	54.6	61.3	52.1	49.9	54.6	61.3	50.5	50.4	52.5	61.8
11000	60	43.1	42.4	44.5	51.9	47.3	46.3	48.8	56.0	51.6	50.5	53.1	60.2
	65	45.9	44.1	48.0	53.8	47.3	46.6	48.8	56.6	51.5	50.5	53.1	60.8
	70	49.8	47.8	52.0	58.0	49.9	47.0	52.1	57.2	51.5	50.9	53.2	61.3
	75	53.7	51.6	56.1	62.2	53.8	51.6	56.1	62.3	53.8	51.4	56.2	62.0
12000	60	43.8	43.3	45.1	52.0	48.0	47.0	49.3	56.1	52.2	51.3	53.7	60.2
	65	47.2	45.5	49.1	54.5	47.9	47.5	49.4	56.7	52.2	51.2	53.6	60.8
	70	51.2	49.3	53.3	58.8	51.3	49.4	53.3	58.8	52.2	51.8	53.7	61.4
	75	55.1	53.1	57.4	63.0	55.2	53.2	57.4	63.1	55.3	52.3	57.5	62.2
Ambient DB 70°F													
7500	60	39.5	38.1	41.8	51.6	43.8	42.3	46.2	56.1	48.1	46.6	50.7	60.7
	65	39.4	38.4	41.8	52.0	43.7	42.3	46.1	56.5	48.1	46.5	50.6	60.9
	70	43.4	40.9	46.3	55.0	43.6	42.6	46.2	56.9	48.0	46.6	50.6	61.5
	75	46.9	44.3	50.1	59.0	47.0	44.4	50.2	59.0	47.9	46.9	50.7	61.8
9000	60	41.5	40.4	43.3	52.0	45.7	44.4	47.7	56.3	50.0	48.7	52.1	60.7
	65	43.1	40.7	45.5	52.5	45.7	44.6	47.7	56.8	50.0	48.7	52.1	61.2
	70	46.8	44.5	49.5	56.8	45.5	45.0	47.7	57.3	49.9	48.9	52.1	61.6
	75	50.5	48.1	53.4	60.9	50.6	48.1	53.5	60.9	49.8	49.2	52.1	62.1
10000	60	42.5	41.6	44.2	52.1	46.7	45.5	48.4	56.4	51.0	49.8	52.8	60.7
	65	44.8	41.9	47.1	52.7	46.7	45.8	48.5	56.9	50.9	49.7	52.8	61.2
	70	48.6	46.4	51.1	57.7	48.7	46.2	51.2	57.5	50.9	50.0	52.8	61.7
	75	52.5	50.1	55.1	61.9	52.5	50.2	55.2	62.0	50.7	50.5	52.9	62.3
11000	60	43.3	42.5	44.8	52.3	47.5	46.4	49.1	56.4	51.8	50.7	53.4	60.6
	65	46.3	44.3	48.4	54.3	47.5	46.8	49.1	57.0	51.7	50.6	53.4	61.2
	70	50.2	48.1	52.5	58.6	50.3	47.2	52.6	57.7	51.7	51.0	53.5	61.8
	75	54.1	51.8	56.6	62.8	54.2	51.9	56.7	62.9	54.3	51.5	56.7	62.5

Table 86. Reheat temperature rise — 25 tons (continued)

Airflow (cfm)	Ent DB (° F)	Entering Wet Bulb (°F)											
		51				55				59			
		Lvg Evap DB (°F)		Lvg Reheat DB (°F)		Lvg Evap DB (°F)		Lvg Reheat DB (°F)		Lvg Evap DB (°F)		Lvg Reheat DB (°F)	
		MIN	MAX	MIN	MAX	MIN	MAX	MIN	MAX	MIN	MAX	MIN	MAX
12000	60	43.9	43.4	45.4	52.4	48.2	47.2	49.6	56.5	52.4	51.4	53.9	60.6
	65	47.6	45.7	49.6	55.0	48.1	47.6	49.7	57.1	52.4	51.4	53.9	61.2
	70	51.6	49.5	53.7	59.3	51.6	49.6	53.8	59.4	52.4	51.9	54.0	61.8
	75	55.5	53.4	57.9	63.6	55.6	53.4	58.0	63.6	55.7	52.4	58.0	62.6

Note: MIN, MAX: The leaving evaporator temperature is affected by the modulating valve position. The MIN and MAX numbers represent modulating valve position impact on both the leaving evaporator temperature and the leaving reheat coil temperature. MAX represents wide open, MIN represents closed to minimum position.

Evaporator Fan Performance — Heat Pump

Fan Curve Limits

Table 87. Fan curve limits

Unit Size (tons)	Unit Model	Motor	Maximum			
			hp	rpm	CFM (cfm/ton)	ESP
3	W/DSK	Standard	0.75 1.0 (575 V)	1200	480	2.0 in H_2O @ 400 cfm/ton
4 to 5	W/DSK	Standard	1.0	1200	480	2.0 in H_2O @ 400 cfm/ton
3 to 5	W/DSK	High Static	1.5	1400	480	2.0 in H_2O @ 400 cfm/ton
3 to 5	W/DHK	Standard	2.9	1850	480	2.0 in H_2O @ 400 cfm/ton
6 to 8.5	W/DSK W/DHK	Standard	2.9	1850	480	2.0 in H_2O @ 400 cfm/ton
10	WSK	Standard	2.9	1850	480	2.0 in H_2O @ 400 cfm/ton
	WSK	High Static	4.2	1940	480	2.0 in H_2O @ 400 cfm/ton
	DSK W/DHK	Standard	4.2	1940	480	2.0 in H_2O @ 400 cfm/ton
12.5	W/DSK W/DHK	Standard	4.2	1940	480	2.0 in H_2O @ 400 cfm/ton
15 to 25	W/DSK W/DHK	Standard	5.8	1850	480	2.0 in H_2O @ 400 cfm/ton
25	W/DSK W/DHK	High Static	8.4	1940	480	2.0 in H_2O @ 400 cfm/ton

The fan curve graphs include standard filter and a wet indoor coil. ESP capability is reduced with options based on the accessory table component pressure drop. To determine ESP at rpm/cfm with other options/accessories, select intersection point of the RPM vs CFM and then reduce ESP shown in graph by the sum of additional option static pressure drop listed in the fan performance accessory table section.

3 to 5 Tons

Figure 9. Fan curves – 3 to 5 tons (model WSK), downflow

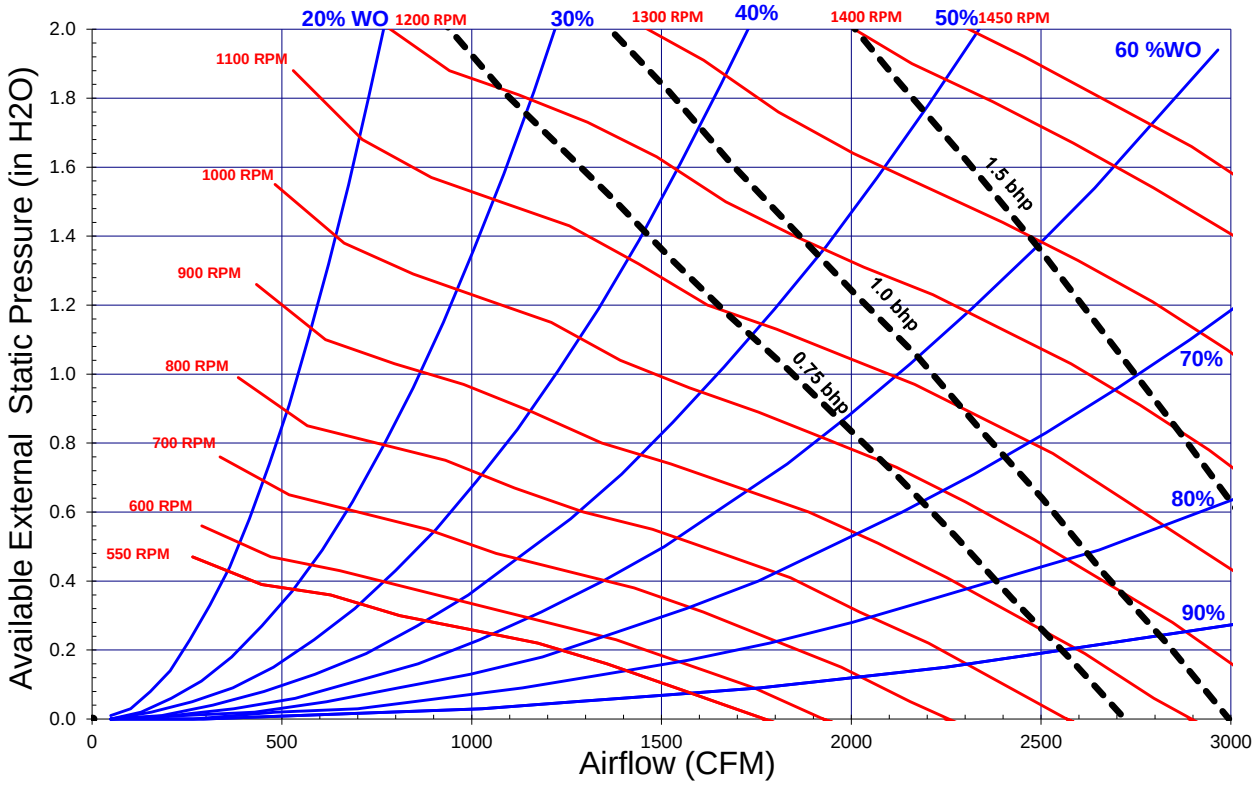

Figure 10. Fan curves – 3 to 5 tons (model WHK), downflow

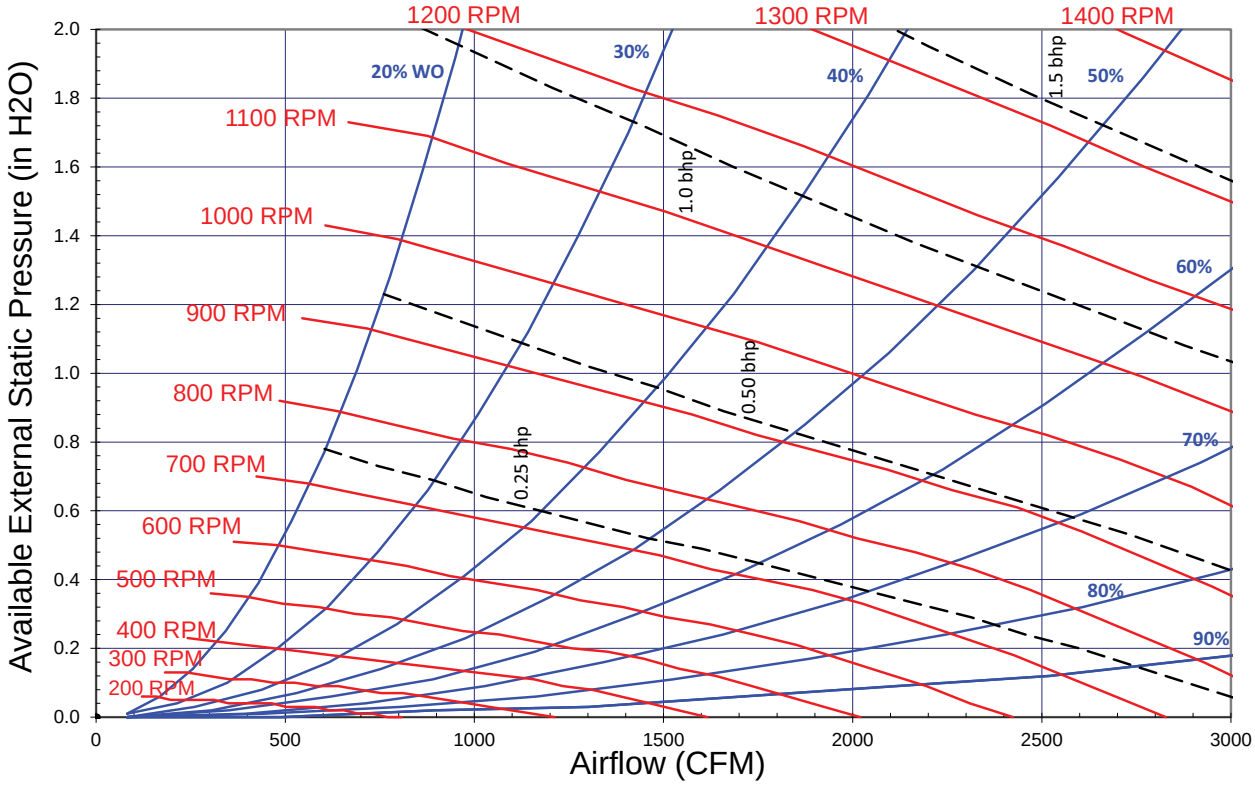

Figure 11. Fan curves – 3 to 5 tons (model WSK), horizontal

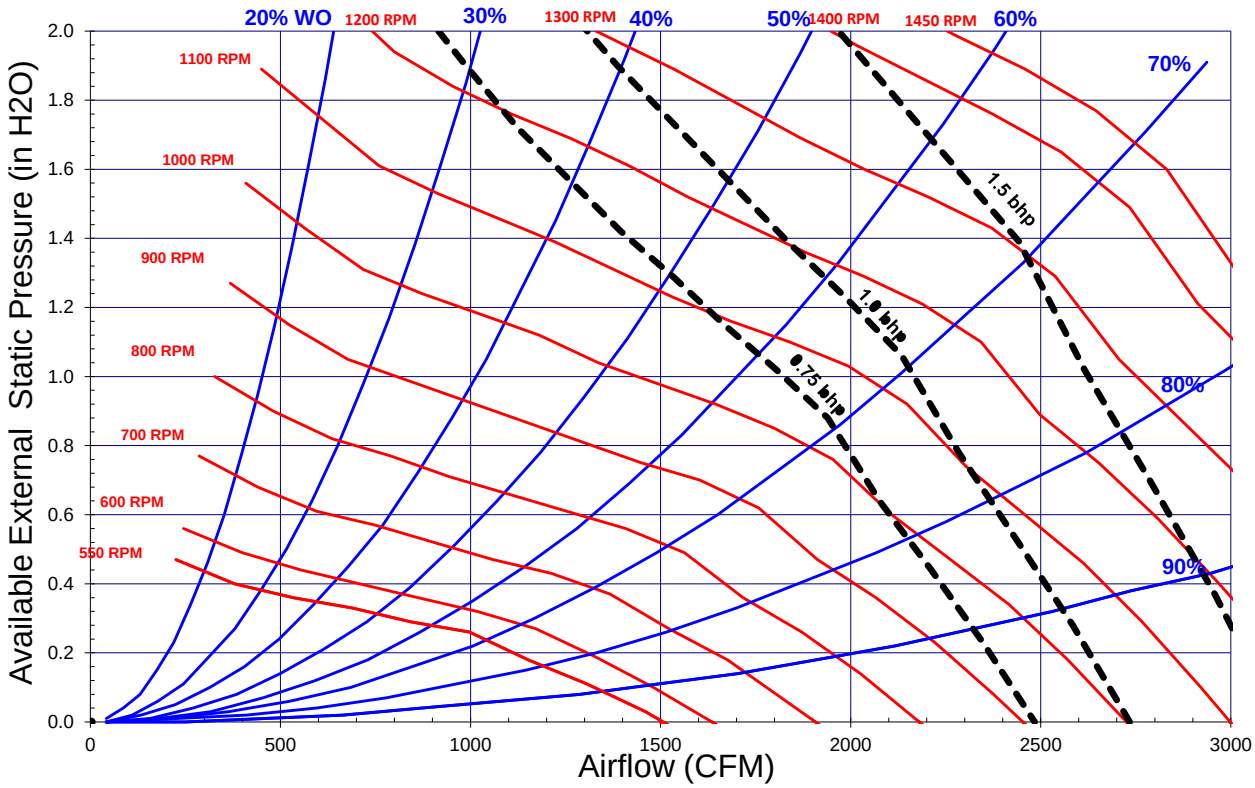

Figure 12. Fan curves – 3 to 5 tons (model WHK), horizontal

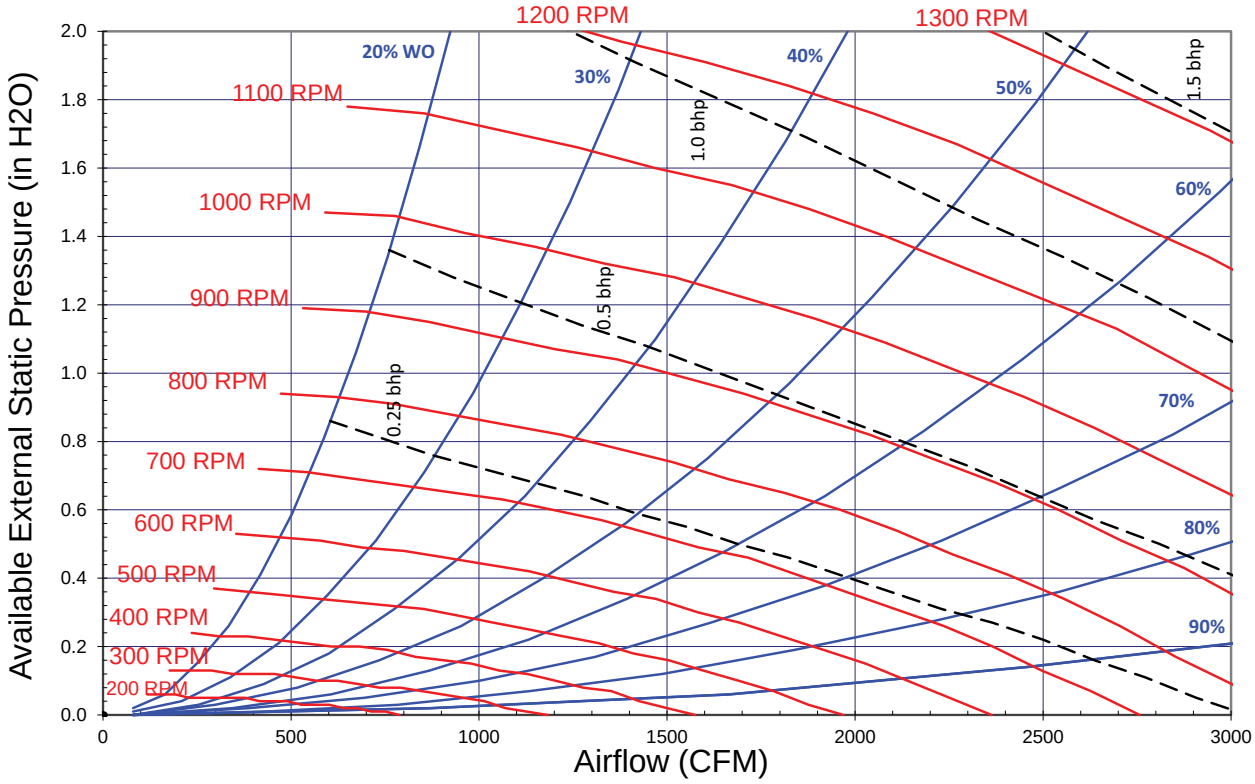

Table 88. Evaporator fan performance - 3 to 5 tons (model WSK)

Unit Size (Tons)	Model Number	CFM	External Static Pressure (in. water) and Motor Power (Bhp)														
			Speed Set 1			Speed Set 2			Speed Set 3			Speed Set 4			Speed Set 5		
			ESP	RPM	BHP	ESP	RPM	BHP	ESP	RPM	BHP	ESP	RPM	BHP	ESP	RPM	BHP
3	WSK036*3, 4, W Downflow Airflow	900	0.67	756	0.19	0.89	851	0.25	1.20	976	0.36	1.47	1070	0.46	1.80	1171	0.59
		960	0.60	734	0.18	0.82	830	0.25	1.13	957	0.35	1.40	1053	0.45	1.72	1155	0.58
		1020	0.54	711	0.18	0.75	809	0.24	1.06	937	0.35	1.32	1034	0.44	1.64	1138	0.57
		1080	0.47	688	0.17	0.68	787	0.23	0.99	917	0.34	1.24	1015	0.43	1.56	1120	0.56
		1140	0.41	665	0.16	0.62	765	0.23	0.91	896	0.33	1.17	995	0.43	1.48	1102	0.55
		1200	0.34	640	0.16	0.55	741	0.22	0.84	874	0.32	1.09	974	0.42	1.40	1082	0.54
		1260	0.28	615	0.15	0.48	717	0.21	0.77	851	0.31	1.01	953	0.41	1.31	1063	0.53
		1320	0.21	590	0.15	0.41	692	0.21	0.69	828	0.31	0.94	931	0.40	1.23	1042	0.52
		1380	0.15	563	0.14	0.34	667	0.20	0.62	804	0.30	0.86	908	0.39	1.15	1021	0.51
		1440	—	—	—	0.27	641	0.19	0.54	780	0.29	0.78	885	0.38	1.06	999	0.50
3	WSK036*3, 4, W Horizontal Airflow	900	0.65	754	0.19	0.86	848	0.25	1.17	972	0.36	1.43	1065	0.46	1.74	1166	0.58
		960	0.58	733	0.18	0.79	828	0.25	1.10	953	0.35	1.36	1047	0.45	1.66	1148	0.57
		1020	0.51	712	0.18	0.72	807	0.24	1.03	933	0.34	1.28	1028	0.44	1.58	1131	0.57
		1080	0.44	690	0.17	0.65	786	0.23	0.95	913	0.34	1.20	1009	0.43	1.50	1112	0.56
		1140	0.36	667	0.17	0.57	764	0.23	0.87	892	0.33	1.12	989	0.42	1.42	1094	0.55
		1200	0.29	645	0.16	0.50	742	0.22	0.79	871	0.32	1.04	969	0.42	1.33	1075	0.54
		1260	0.21	622	0.15	0.42	720	0.21	0.71	850	0.31	0.95	948	0.41	1.25	1055	0.53
		1320	0.14	598	0.15	0.34	697	0.21	0.63	828	0.31	0.87	928	0.40	1.16	1036	0.52
		1380	0.06	574	0.14	0.26	674	0.20	0.55	806	0.30	0.78	906	0.39	1.07	1015	0.51
		1440	—	—	—	0.18	650	0.19	0.46	783	0.29	0.70	885	0.38	0.98	995	0.50
4	WSK048*3, 4, W Downflow Airflow	1200	0.84	856	0.32	1.32	1026	0.50	1.52	1085	0.58	1.76	1151	0.68	2.00	1200	0.79
		1280	0.75	831	0.31	1.22	1005	0.49	1.41	1065	0.57	1.65	1133	0.67	1.89	1193	0.78
		1360	0.65	804	0.30	1.12	982	0.48	1.31	1044	0.56	1.54	1114	0.66	1.78	1176	0.77
		1440	0.56	775	0.29	1.02	958	0.47	1.20	1021	0.55	1.43	1094	0.65	1.66	1158	0.76
		1520	0.46	745	0.27	0.91	932	0.45	1.10	997	0.53	1.32	1072	0.64	1.55	1138	0.74
		1600	0.36	714	0.26	0.81	905	0.44	0.99	972	0.52	1.21	1049	0.62	1.43	1117	0.73
		1680	0.26	681	0.25	0.70	876	0.43	0.88	945	0.51	1.10	1024	0.61	1.32	1094	0.72
		1760	0.16	647	0.24	0.59	846	0.41	0.77	917	0.49	0.98	997	0.59	1.20	1070	0.70
		1840	0.06	611	0.23	0.49	814	0.40	0.66	887	0.47	0.87	970	0.58	1.08	1044	0.68
		1920	—	—	—	0.38	782	0.38	0.54	856	0.46	0.75	941	0.56	0.96	1017	0.67
4	WSK048*3, 4, W Horizontal Airflow	1200	0.80	873	0.32	1.24	1037	0.51	1.41	1095	0.59	1.62	1161	0.69	—	—	—
		1280	0.70	847	0.31	1.14	1015	0.50	1.31	1075	0.58	1.53	1142	0.68	1.74	1203	0.79
		1360	0.60	820	0.30	1.04	992	0.48	1.21	1053	0.56	1.43	1123	0.67	1.63	1185	0.78
		1440	0.50	792	0.29	0.94	968	0.47	1.11	1030	0.55	1.32	1101	0.66	1.53	1166	0.76
		1520	0.39	763	0.28	0.83	942	0.46	1.00	1006	0.54	1.21	1079	0.64	1.42	1146	0.75
		1600	0.28	732	0.27	0.71	915	0.45	0.88	980	0.52	1.10	1056	0.63	1.31	1124	0.74
		1680	0.16	700	0.26	0.59	887	0.43	0.77	954	0.51	0.98	1031	0.61	1.19	1101	0.72
		1760	0.03	667	0.25	0.47	858	0.42	0.64	926	0.50	0.86	1005	0.60	1.06	1077	0.70
		1840	—	—	—	0.34	827	0.40	0.52	897	0.48	0.73	978	0.58	0.94	1052	0.69
		1920	—	—	—	0.21	795	0.39	0.38	867	0.46	0.60	950	0.56	0.80	1025	0.67

Table 88. Evaporator fan performance - 3 to 5 tons (model WSK) (continued)

5	WSK060*3, 4, W Downflow Airflow	1500	1.12	1004	0.54	1.40	1091	0.66	1.67	1167	0.79	—	—	—	—	—	—
		1600	0.99	972	0.52	1.26	1063	0.65	1.52	1142	0.77	1.75	1199	0.88	—	—	—
		1700	0.85	938	0.50	1.11	1032	0.63	1.38	1114	0.76	1.59	1174	0.87	1.73	1206	0.93
		1800	0.71	902	0.48	0.97	999	0.61	1.23	1085	0.74	1.44	1147	0.85	1.57	1180	0.91
		1900	0.57	863	0.46	0.82	964	0.59	1.08	1053	0.71	1.29	1117	0.82	1.41	1152	0.89
		2000	0.43	823	0.44	0.68	926	0.56	0.92	1018	0.69	1.13	1086	0.80	1.25	1122	0.87
		2100	0.29	780	0.42	0.53	887	0.54	0.77	982	0.67	0.97	1052	0.78	1.09	1090	0.84
		2200	0.14	735	0.39	0.38	845	0.51	0.62	943	0.64	0.81	1016	0.75	0.93	1055	0.82
		2300	—	—	—	0.23	800	0.49	0.46	902	0.61	0.65	977	0.72	0.77	1018	0.79
		2400	—	—	—	0.08	754	0.46	0.30	858	0.58	0.49	936	0.69	0.60	979	0.76
5	WSK060*3, 4, W Horizontal Airflow	1500	1.03	1012	0.54	1.28	1099	0.67	1.53	1175	0.80	—	—	—	—	—	—
		1600	0.88	980	0.52	1.14	1070	0.65	1.39	1149	0.78	1.59	1208	0.89	—	—	—
		1700	0.74	947	0.51	0.99	1039	0.63	1.24	1122	0.76	1.44	1182	0.87	—	—	—
		1800	0.58	912	0.49	0.83	1007	0.61	1.08	1092	0.74	1.29	1155	0.85	1.41	1190	0.92
		1900	0.42	874	0.47	0.67	972	0.59	0.92	1060	0.72	1.12	1126	0.83	1.25	1162	0.90
		2000	0.25	835	0.45	0.50	936	0.57	0.75	1027	0.70	0.96	1095	0.81	1.08	1132	0.88
		2100	0.07	794	0.43	0.33	898	0.54	0.57	991	0.67	0.78	1062	0.78	0.90	1101	0.85
		2200	—	—	—	0.14	858	0.52	0.39	954	0.65	0.60	1027	0.76	0.72	1067	0.83
		2300	—	—	—	—	—	—	0.20	915	0.62	0.41	990	0.73	0.53	1032	0.80
		2400	—	—	—	—	—	—	—	—	—	0.21	951	0.70	0.33	994	0.77

Notes:

1. Available External Static Pressure is the static pressure difference between the return duct and the supply duct plus the static pressure drop caused by accessories and options.
2. For direct drive evaporator fan speed (rpm), refer to the applicable table in the fan performance section.
3. Data includes pressure drop due to standard filters and wet coils. No accessories or options are included in pressure drop data.
4. To determine static pressure drop due to other options/accessories, refer to the applicable table in the fan performance section.
5. For 036 models, fan motor heat (MBh) = 2.72 x Fan Bhp + 0.16. For 048 & 060 models, fan motor heat (MBh) = 2.87 x Fan Bhp + 0.15
6. Factory supplied motors, in commercial equipment, are definite purpose motors, specifically designed and tested to operate reliably and continuously at all cataloged conditions. Using the full horsepower range of our fan motors as shown in our tabular data will not result in nuisance tripping or premature motor failure. Our product's warranty will not be affected.

Table 89. Evaporator fan performance - 3 to 5 tons (model WSK), high static motor

Unit Size (tons)	Model Number	CFM	External Static Pressure (in. water) and Motor Power (Bhp)														
			Speed Set 1			Speed Set 2			Speed Set 3			Speed Set 4			Speed Set 5		
			ESP	RPM	BHP	ESP	RPM	BHP	ESP	RPM	BHP	ESP	RPM	BHP	ESP	RPM	BHP
3	WSK036*3, 4, W Downflow Airflow	900	1.32	1001	0.45	1.62	1105	0.57	1.97	1219	0.71	—	—	—	—	—	—
		960	1.25	984	0.44	1.55	1088	0.56	1.90	1204	0.70	—	—	—	—	—	—
		1020	1.19	965	0.44	1.48	1071	0.55	1.83	1187	0.69	—	—	—	—	—	—
		1080	1.12	946	0.43	1.41	1053	0.54	1.75	1170	0.68	—	—	—	—	—	—
		1140	1.05	927	0.42	1.33	1034	0.53	1.68	1153	0.67	1.99	1252	0.81	—	—	—
		1200	0.98	906	0.41	1.26	1015	0.52	1.60	1135	0.66	1.91	1235	0.80	—	—	—
		1260	0.91	886	0.40	1.19	995	0.51	1.52	1116	0.65	1.83	1217	0.79	—	—	—
		1320	0.83	864	0.39	1.11	975	0.50	1.44	1097	0.64	1.75	1199	0.78	—	—	—
		1380	0.76	843	0.38	1.04	954	0.49	1.37	1077	0.63	1.67	1180	0.77	—	—	—
		1440	0.69	820	0.37	0.96	932	0.48	1.29	1057	0.62	1.59	1161	0.75	2.00	1296	0.96

Table 89. Evaporator fan performance - 3 to 5 tons (model WSK), high static motor (continued)

3	WSK036*3, 4, W Horizontal Airflow	900	1.27	983	0.44	1.56	1080	0.55	1.91	1187	0.69	—	—	—	—	—	—
		960	1.21	968	0.44	1.49	1066	0.55	1.84	1174	0.68	—	—	—	—	—	—
		1020	1.14	952	0.43	1.43	1051	0.54	1.77	1160	0.68	—	—	—	—	—	—
		1080	1.07	936	0.42	1.35	1036	0.53	1.69	1146	0.67	2.00	1238	0.80	—	—	—
		1140	1.00	920	0.42	1.28	1020	0.52	1.62	1131	0.66	1.92	1224	0.79	—	—	—
		1200	0.93	903	0.41	1.21	1004	0.51	1.54	1116	0.65	1.84	1210	0.78	—	—	—
		1260	0.86	885	0.40	1.13	987	0.51	1.46	1100	0.64	1.76	1195	0.77	—	—	—
		1320	0.78	867	0.39	1.05	970	0.50	1.38	1084	0.63	1.68	1179	0.76	—	—	—
		1380	0.70	848	0.38	0.97	952	0.49	1.30	1067	0.62	1.60	1164	0.75	2.00	1288	0.96
		1440	0.62	829	0.37	0.89	934	0.48	1.22	1050	0.61	1.51	1147	0.74	1.94	1273	0.95
4	WSK048*3, 4, W Downflow Airflow	1200	1.49	1096	0.61	1.71	1172	0.71	2.00	1261	0.84	—	—	—	—	—	—
		1280	1.38	1070	0.60	1.61	1148	0.70	1.89	1238	0.82	—	—	—	—	—	—
		1360	1.28	1044	0.58	1.50	1122	0.68	1.78	1213	0.81	—	—	—	—	—	—
		1440	1.18	1016	0.57	1.39	1096	0.66	1.67	1188	0.79	—	—	—	—	—	—
		1520	1.07	988	0.55	1.29	1068	0.65	1.55	1162	0.77	1.98	1295	0.99	—	—	—
		1600	0.96	958	0.54	1.18	1039	0.63	1.44	1134	0.76	1.87	1270	0.97	—	—	—
		1680	0.85	928	0.52	1.06	1010	0.61	1.33	1106	0.74	1.74	1244	0.95	—	—	—
		1760	0.74	896	0.50	0.95	979	0.59	1.21	1076	0.72	1.62	1216	0.93	—	—	—
		1840	0.63	863	0.48	0.84	948	0.58	1.09	1046	0.70	1.50	1188	0.90	—	—	—
		1920	0.52	830	0.46	0.72	915	0.56	0.97	1015	0.68	1.37	1158	0.88	2.00	1357	1.25
4	WSK048*3, 4, W Horizontal Airflow	1200	1.43	1080	0.60	1.65	1151	0.70	1.93	1234	0.82	—	—	—	—	—	—
		1280	1.32	1058	0.59	1.54	1130	0.69	1.82	1214	0.81	—	—	—	—	—	—
		1360	1.22	1036	0.58	1.43	1109	0.67	1.71	1194	0.80	—	—	—	—	—	—
		1440	1.11	1012	0.57	1.32	1086	0.66	1.59	1172	0.78	2.00	1295	0.99	—	—	—
		1520	1.00	988	0.55	1.21	1063	0.65	1.47	1150	0.77	1.90	1274	0.97	—	—	—
		1600	0.88	963	0.54	1.09	1039	0.63	1.35	1127	0.75	1.77	1253	0.95	—	—	—
		1680	0.76	937	0.52	0.97	1014	0.62	1.23	1103	0.73	1.65	1231	0.94	—	—	—
		1760	0.64	910	0.51	0.85	988	0.60	1.10	1078	0.72	1.51	1208	0.92	—	—	—
		1840	0.52	882	0.49	0.72	961	0.58	0.97	1052	0.70	1.38	1184	0.90	2.00	1364	1.26
		1920	0.39	853	0.48	0.59	933	0.57	0.84	1026	0.68	1.24	1159	0.88	1.92	1342	1.24
5	WSK060*3, 4, W Downflow Airflow	1500	1.53	1150	0.75	1.80	1237	0.88	2.00	1317	1.02	—	—	—	—	—	—
		1600	1.39	1116	0.73	1.65	1205	0.86	1.92	1286	0.99	—	—	—	—	—	—
		1700	1.24	1080	0.71	1.50	1170	0.84	1.77	1253	0.97	—	—	—	—	—	—
		1800	1.10	1042	0.68	1.35	1134	0.81	1.61	1218	0.94	1.97	1323	1.13	—	—	—
		1900	0.95	1003	0.66	1.20	1097	0.78	1.45	1182	0.91	1.81	1290	1.10	—	—	—
		2000	0.80	963	0.63	1.05	1057	0.76	1.29	1145	0.89	1.64	1254	1.07	—	—	—
		2100	0.65	920	0.60	0.89	1017	0.73	1.13	1106	0.86	1.47	1217	1.04	—	—	—
		2200	0.49	876	0.57	0.73	974	0.70	0.97	1065	0.82	1.30	1179	1.01	—	—	—
		2300	0.34	831	0.54	0.57	930	0.66	0.80	1022	0.79	1.13	1138	0.98	1.95	1363	1.45
		2400	0.18	784	0.51	0.41	885	0.63	0.63	978	0.76	0.96	1096	0.94	1.76	1326	1.41
5	WSK060*3, 4, W Horizontal Airflow	1500	1.45	1139	0.75	1.72	1220	0.87	1.98	1294	1.00	—	—	—	—	—	—
		1600	1.30	1110	0.73	1.56	1192	0.85	1.83	1267	0.98	—	—	—	—	—	—
		1700	1.15	1079	0.71	1.41	1163	0.83	1.67	1240	0.96	2.00	1335	1.14	—	—	—
		1800	0.99	1048	0.69	1.24	1133	0.81	1.50	1211	0.94	1.86	1308	1.12	—	—	—
		1900	0.82	1014	0.66	1.08	1101	0.79	1.33	1180	0.91	1.68	1279	1.10	—	—	—
		2000	0.66	980	0.64	0.91	1068	0.76	1.15	1149	0.89	1.50	1250	1.07	—	—	—
		2100	0.48	944	0.62	0.73	1033	0.74	0.98	1115	0.86	1.32	1218	1.04	—	—	—
		2200	0.31	906	0.59	0.55	997	0.71	0.79	1081	0.84	1.13	1186	1.02	1.98	1386	1.48
		2300	0.13	868	0.57	0.37	960	0.69	0.60	1045	0.81	0.94	1152	0.99	1.77	1357	1.45
		2400	—	—	—	0.18	921	0.66	0.41	1008	0.78	0.74	1117	0.96	1.56	1327	1.41

Table 89. Evaporator fan performance - 3 to 5 tons (model WSK), high static motor (continued)

Notes:

1. Available External Static Pressure is the static pressure difference between the return duct and the supply duct plus the static pressure drop caused by accessories and options.
2. For direct drive evaporator fan speed (rpm), refer to the applicable table in the fan performance section.
3. Data includes pressure drop due to standard filters and wet coils. No accessories or options are included in pressure drop data.
4. To determine static pressure drop due to other options/accessories, refer to the applicable table in the fan performance section.
5. For 036 models, fan motor heat (MBh) = 2.72 x Fan Bhp + 0.16. For 048 & 060 models, fan motor heat (MBh) = 2.87 x Fan Bhp + 0.15
6. Factory supplied motors, in commercial equipment, are definite purpose motors, specifically designed and tested to operate reliably and continuously at all cataloged conditions. Using the full horsepower range of our fan motors as shown in our tabular data will not result in nuisance tripping or premature motor failure. Our product's warranty will not be affected.

Table 90. Evaporator fan performance - 3 tons (model WHK), downflow

Available External Static Pressure (Inches of Water Gauge)																				
	0.10		0.20		0.30		0.40		0.50		0.60		0.70		0.80		0.90		1.00	
CFM	RPM	BHP	RPM	BHP	RPM	BHP	RPM	BHP	RPM	BHP	RPM	BHP	RPM	BHP	RPM	BHP	RPM	BHP	RPM	BHP
900	353	0.03	449	0.06	523	0.09	587	0.13	645	0.17	696	0.21	744	0.26	789	0.30	831	0.35	870	0.40
960	361	0.03	457	0.06	531	0.10	594	0.14	651	0.18	703	0.22	751	0.27	795	0.31	837	0.36	877	0.42
1080	380	0.04	472	0.07	547	0.11	609	0.15	665	0.19	717	0.24	764	0.28	809	0.33	851	0.39	890	0.44
1200	401	0.04	488	0.08	562	0.12	625	0.16	680	0.20	731	0.25	778	0.30	822	0.35	864	0.41	903	0.46
1320	424	0.05	505	0.09	578	0.13	641	0.17	696	0.22	746	0.27	792	0.32	836	0.38	878	0.43	917	0.49
1440	447	0.06	524	0.09	594	0.14	656	0.19	712	0.24	761	0.29	807	0.34	850	0.40	891	0.46	931	0.52
Available External Static Pressure (Inches of Water Gauge)																				
	1.10		1.20		1.30		1.40		1.50		1.60		1.70		1.80		1.90		2.00	
CFM	RPM	BHP	RPM	BHP	RPM	BHP	RPM	BHP	RPM	BHP	RPM	BHP	RPM	BHP	RPM	BHP	RPM	BHP	RPM	BHP
900	908	0.46	944	0.51	979	0.57	1012	0.63	1044	0.69	1075	0.75	1106	0.81	1136	0.88	1166	0.94	1195	1.01
960	915	0.47	951	0.53	985	0.58	1019	0.64	1051	0.7	1082	0.76	1112	0.83	1141	0.89	1170	0.96	1199	1.03
1080	928	0.5	964	0.55	998	0.61	1032	0.67	1064	0.74	1095	0.8	1125	0.87	1154	0.93	1183	1.00	1210	1.07
1200	941	0.52	977	0.58	1011	0.64	1045	0.71	1077	0.77	1108	0.84	1138	0.90	1167	0.97	1195	1.04	1223	1.12
1320	954	0.55	990	0.61	1025	0.67	1058	0.74	1090	0.81	1121	0.87	1151	0.94	1180	1.01	1208	1.09	1236	1.16
1440	968	0.58	1004	0.64	1038	0.71	1071	0.78	1103	0.84	1134	0.91	1164	0.98	1193	1.06	1222	1.13	1249	1.21

Notes:

1. Available External Static Pressure is the static pressure difference between the return duct and the supply duct plus the static pressure drop caused by accessories and options.
2. For direct drive evaporator fan speed (rpm), refer to the applicable table in the fan performance section.
3. Data includes pressure drop due to standard filters and wet coils. No accessories or options are included in pressure drop data.
4. To determine static pressure drop due to other options/accessories, refer to the applicable table in the fan performance section.
5. Direct drive fan motor heat is negligible.
6. Factory supplied motors, in commercial equipment, are definite purpose motors, specifically designed and tested to operate reliably and continuously at all cataloged conditions. Using the full horsepower range of our fan motors as shown in our tabular data will not result in nuisance tripping or premature motor failure. Our product's warranty will not be affected.

Table 91. Evaporator fan performance - 4 tons (model WHK), downflow

Available External Static Pressure (Inches of Water Gauge)																				
	0.10		0.20		0.30		0.40		0.50		0.60		0.70		0.80		0.90		1.00	
CFM	RPM	BHP	RPM	BHP	RPM	BHP	RPM	BHP	RPM	BHP	RPM	BHP	RPM	BHP	RPM	BHP	RPM	BHP	RPM	BHP
1200	401	0.04	488	0.08	562	0.12	625	0.16	680	0.20	731	0.25	778	0.30	822	0.35	864	0.41	903	0.46
1280	416	0.05	500	0.08	573	0.12	635	0.17	691	0.21	741	0.26	787	0.32	831	0.37	873	0.42	912	0.48
1440	447	0.06	524	0.09	594	0.14	656	0.19	712	0.24	761	0.29	807	0.34	850	0.40	891	0.46	931	0.52
1600	479	0.07	550	0.11	617	0.15	677	0.20	733	0.26	783	0.31	828	0.37	871	0.43	911	0.49	949	0.56
1760	512	0.08	579	0.12	641	0.17	699	0.23	754	0.28	803	0.34	850	0.40	892	0.46	932	0.53	970	0.59
1920	547	0.10	609	0.14	667	0.19	723	0.25	775	0.31	824	0.37	870	0.43	913	0.50	953	0.57	991	0.63
Available External Static Pressure (Inches of Water Gauge)																				
	1.10		1.20		1.30		1.40		1.50		1.60		1.70		1.80		1.90		2.00	
CFM	RPM	BHP	RPM	BHP	RPM	BHP	RPM	BHP	RPM	BHP	RPM	BHP	RPM	BHP	RPM	BHP	RPM	BHP	RPM	BHP
1200	941	0.52	977	0.58	1011	0.64	1045	0.71	1077	0.77	1108	0.84	1138	0.9	1167	0.97	1195	1.04	1223	1.12
1280	950	0.54	986	0.6	1020	0.66	1053	0.73	1085	0.79	1116	0.86	1146	0.93	1176	1	1204	1.07	1232	1.15

Table 91. Evaporator fan performance - 4 tons (model WHK), downflow (continued)

	Available External Static Pressure (Inches of Water Gauge)																			
	1.10		1.20		1.30		1.40		1.50		1.60		1.70		1.80		1.90		2.00	
CFM	RPM	BHP	RPM	BHP	RPM	BHP	RPM	BHP	RPM	BHP	RPM	BHP	RPM	BHP	RPM	BHP	RPM	BHP	RPM	BHP
1440	968	0.58	1004	0.64	1038	0.71	1071	0.78	1103	0.84	1134	0.91	1164	0.98	1193	1.06	1222	1.13	1249	1.21
1600	986	0.62	1022	0.69	1056	0.75	1089	0.82	1121	0.9	1152	0.97	1182	1.04	1211	1.12	1239	1.19	1267	1.27
1760	1006	0.66	1041	0.73	1075	0.8	1107	0.88	1139	0.95	1170	1.03	1200	1.1	1229	1.18	1257	1.26	1285	1.34
1920	1027	0.71	1062	0.78	1095	0.85	1127	0.93	1158	1.01	1188	1.09	1218	1.16	1247	1.25	1275	1.33	1303	1.41

Notes:

1. Available External Static Pressure is the static pressure difference between the return duct and the supply duct plus the static pressure drop caused by accessories and options.
2. For direct drive evaporator fan speed (rpm), refer to the applicable table in the fan performance section.
3. Data includes pressure drop due to standard filters and wet coils. No accessories or options are included in pressure drop data.
4. To determine static pressure drop due to other options/accessories, refer to the applicable table in the fan performance section.
5. Direct drive fan motor heat is negligible.
6. Factory supplied motors, in commercial equipment, are definite purpose motors, specifically designed and tested to operate reliably and continuously at all cataloged conditions. Using the full horsepower range of our fan motors as shown in our tabular data will not result in nuisance tripping or premature motor failure. Our product's warranty will not be affected.

Table 92. Evaporator fan performance - 5 tons (model WHK), downflow

	Available External Static Pressure (Inches of Water Gauge)																			
	0.10		0.20		0.30		0.40		0.50		0.60		0.70		0.80		0.90		1.00	
CFM	RPM	BHP	RPM	BHP	RPM	BHP	RPM	BHP	RPM	BHP	RPM	BHP	RPM	BHP	RPM	BHP	RPM	BHP	RPM	BHP
1500	459	0.06	534	0.10	602	0.14	664	0.19	720	0.24	769	0.30	815	0.35	858	0.41	898	0.47	937	0.53
1600	479	0.07	550	0.11	617	0.15	677	0.20	733	0.26	783	0.31	828	0.37	871	0.43	911	0.49	949	0.56
1800	521	0.09	587	0.13	647	0.18	705	0.23	759	0.29	809	0.35	855	0.41	897	0.47	937	0.54	975	0.60
2000	564	0.11	625	0.15	681	0.20	735	0.26	787	0.32	835	0.38	881	0.45	923	0.52	964	0.59	1002	0.66
2200	608	0.13	664	0.18	718	0.24	767	0.29	816	0.36	863	0.42	907	0.49	950	0.56	990	0.64	1028	0.71
2400	653	0.16	706	0.22	756	0.27	803	0.33	848	0.40	892	0.47	936	0.54	977	0.62	1016	0.69	1054	0.77
	Available External Static Pressure (Inches of Water Gauge)																			
	1.10		1.20		1.30		1.40		1.50		1.60		1.70		1.80		1.90		2.00	
CFM	RPM	BHP	RPM	BHP	RPM	BHP	RPM	BHP	RPM	BHP	RPM	BHP	RPM	BHP	RPM	BHP	RPM	BHP	RPM	BHP
1500	975	0.59	1011	0.66	1045	0.73	1078	0.79	1110	0.86	1141	0.93	1171	1.01	1200	1.08	1228	1.15	1256	1.23
1600	986	0.62	1022	0.69	1056	0.75	1089	0.82	1121	0.9	1152	0.97	1182	1.04	1211	1.12	1239	1.19	1267	1.27
1800	1011	0.67	1046	0.74	1079	0.82	1112	0.89	1144	0.96	1175	1.04	1204	1.12	1233	1.2	1262	1.28	1289	1.36
2000	1038	0.73	1072	0.8	1105	0.88	1137	0.96	1168	1.03	1198	1.12	1227	1.2	1256	1.28	1284	1.36	1312	1.45
2200	1064	0.79	1098	0.87	1131	0.94	1163	1.03	1194	1.11	1224	1.19	1252	1.28	1281	1.36	1308	1.45	1335	1.54
2400	1090	0.85	1125	0.93	1158	1.02	1190	1.1	1220	1.19	1250	1.27	1278	1.36	1306	1.45	1334	1.54	1360	1.64

Notes:

1. Available External Static Pressure is the static pressure difference between the return duct and the supply duct plus the static pressure drop caused by accessories and options.
2. For direct drive evaporator fan speed (rpm), refer to the applicable table in the fan performance section.
3. Data includes pressure drop due to standard filters and wet coils. No accessories or options are included in pressure drop data.
4. To determine static pressure drop due to other options/accessories, refer to the applicable table in the fan performance section.
5. Direct drive fan motor heat is negligible.
6. Factory supplied motors, in commercial equipment, are definite purpose motors, specifically designed and tested to operate reliably and continuously at all cataloged conditions. Using the full horsepower range of our fan motors as shown in our tabular data will not result in nuisance tripping or premature motor failure. Our product's warranty will not be affected.

Table 93. Evaporator fan performance - 3 tons (model WHK), horizontal

	Available External Static Pressure (Inches of Water Gauge)																			
	0.10		0.20		0.30		0.40		0.50		0.60		0.70		0.80		0.90		1.00	
CFM	RPM	BHP	RPM	BHP	RPM	BHP	RPM	BHP	RPM	BHP	RPM	BHP	RPM	BHP	RPM	BHP	RPM	BHP	RPM	BHP
900	344	0.03	430	0.05	502	0.08	563	0.11	621	0.15	673	0.19	721	0.23	766	0.27	808	0.31	848	0.36
960	354	0.03	438	0.06	509	0.09	570	0.12	626	0.16	678	0.19	726	0.23	771	0.28	813	0.32	853	0.37
1080	376	0.04	455	0.06	524	0.10	584	0.13	638	0.17	688	0.21	736	0.25	781	0.29	823	0.34	862	0.39
1200	398	0.04	474	0.07	540	0.11	599	0.14	652	0.18	701	0.22	746	0.27	790	0.31	832	0.36	872	0.41

Table 93. Evaporator fan performance - 3 tons (model WHK), horizontal (continued)

Available External Static Pressure (Inches of Water Gauge)																				
	0.10		0.20		0.30		0.40		0.50		0.60		0.70		0.80		0.90		1.00	
CFM	RPM	BHP	RPM	BHP	RPM	BHP	RPM	BHP	RPM	BHP	RPM	BHP	RPM	BHP	RPM	BHP	RPM	BHP	RPM	BHP
1320	421	0.05	494	0.08	557	0.12	615	0.16	667	0.20	715	0.24	760	0.28	801	0.33	842	0.38	882	0.43
1440	446	0.06	515	0.09	576	0.13	632	0.17	683	0.21	730	0.26	774	0.30	816	0.35	855	0.40	892	0.46
Available External Static Pressure (Inches of Water Gauge)																				
	1.10		1.20		1.30		1.40		1.50		1.60		1.70		1.80		1.90		2.00	
CFM	RPM	BHP	RPM	BHP	RPM	BHP	RPM	BHP	RPM	BHP	RPM	BHP	RPM	BHP	RPM	BHP	RPM	BHP	RPM	BHP
900	886	0.4	922	0.45	957	0.5	990	0.55	1023	0.6	1054	0.66	1084	0.71	1114	0.77	1143	0.83	1172	0.89
960	891	0.41	927	0.46	962	0.51	995	0.57	1027	0.62	1059	0.67	1089	0.73	1118	0.79	1147	0.85	1175	0.9
1080	900	0.44	936	0.49	971	0.54	1005	0.59	1037	0.65	1068	0.71	1098	0.76	1128	0.82	1156	0.88	1184	0.94
1200	910	0.46	946	0.51	981	0.57	1014	0.62	1046	0.68	1078	0.74	1108	0.8	1137	0.86	1166	0.92	1193	0.98
1320	920	0.49	956	0.54	990	0.6	1024	0.65	1056	0.71	1087	0.77	1117	0.83	1147	0.9	1175	0.96	1203	1.02
1440	930	0.51	966	0.57	1000	0.63	1034	0.68	1066	0.74	1097	0.81	1127	0.87	1156	0.93	1185	1.00	1213	1.07

Notes:

1. Available External Static Pressure is the static pressure difference between the return duct and the supply duct plus the static pressure drop caused by accessories and options.
2. For direct drive evaporator fan speed (rpm), refer to the applicable table in the fan performance section.
3. Data includes pressure drop due to standard filters and wet coils. No accessories or options are included in pressure drop data.
4. To determine static pressure drop due to other options/accessories, refer to the applicable table in the fan performance section.
5. Direct drive fan motor heat is negligible.
6. Factory supplied motors, in commercial equipment, are definite purpose motors, specifically designed and tested to operate reliably and continuously at all cataloged conditions. Using the full horsepower range of our fan motors as shown in our tabular data will not result in nuisance tripping or premature motor failure. Our product's warranty will not be affected.

Table 94. Evaporator fan performance - 4 tons (model WHK), horizontal

Available External Static Pressure (Inches of Water Gauge)																				
	0.10		0.20		0.30		0.40		0.50		0.60		0.70		0.80		0.90		1.00	
CFM	RPM	BHP	RPM	BHP	RPM	BHP	RPM	BHP	RPM	BHP	RPM	BHP	RPM	BHP	RPM	BHP	RPM	BHP	RPM	BHP
1200	398	0.04	474	0.07	540	0.11	599	0.14	652	0.18	701	0.22	746	0.27	790	0.31	832	0.36	872	0.41
1280	413	0.05	487	0.08	552	0.11	609	0.15	662	0.19	710	0.23	755	0.28	797	0.33	839	0.37	879	0.43
1440	446	0.06	515	0.09	576	0.13	632	0.17	683	0.21	730	0.26	774	0.30	816	0.35	855	0.40	892	0.46
1600	480	0.07	545	0.11	602	0.15	655	0.19	705	0.23	751	0.28	794	0.33	835	0.38	874	0.44	911	0.49
1760	514	0.08	575	0.12	631	0.17	681	0.21	727	0.26	773	0.31	815	0.36	855	0.42	893	0.47	930	0.53
1920	550	0.10	606	0.14	660	0.19	708	0.24	753	0.29	796	0.34	838	0.39	877	0.45	914	0.51	950	0.57
Available External Static Pressure (Inches of Water Gauge)																				
	1.10		1.20		1.30		1.40		1.50		1.60		1.70		1.80		1.90		2.00	
CFM	RPM	BHP	RPM	BHP	RPM	BHP	RPM	BHP	RPM	BHP	RPM	BHP	RPM	BHP	RPM	BHP	RPM	BHP	RPM	BHP
1200	910	0.46	946	0.51	981	0.57	1014	0.62	1046	0.68	1078	0.74	1108	0.8	1137	0.86	1166	0.92	1193	0.98
1280	916	0.48	953	0.53	987	0.59	1021	0.64	1053	0.7	1084	0.76	1114	0.82	1143	0.88	1172	0.95	1200	1.01
1440	930	0.51	966	0.57	1000	0.63	1034	0.68	1066	0.74	1097	0.81	1127	0.87	1156	0.93	1185	1	1213	1.07
1600	946	0.55	979	0.61	1013	0.67	1047	0.73	1079	0.79	1110	0.85	1140	0.92	1169	0.99	1198	1.05	1225	1.12
1760	965	0.59	998	0.65	1031	0.71	1062	0.77	1092	0.84	1123	0.9	1153	0.97	1182	1.04	1211	1.11	1238	1.18
1920	984	0.63	1018	0.69	1050	0.76	1081	0.82	1111	0.89	1140	0.96	1168	1.03	1196	1.1	1224	1.17	1252	1.24

Notes:

1. Available External Static Pressure is the static pressure difference between the return duct and the supply duct plus the static pressure drop caused by accessories and options.
2. For direct drive evaporator fan speed (rpm), refer to the applicable table in the fan performance section.
3. Data includes pressure drop due to standard filters and wet coils. No accessories or options are included in pressure drop data.
4. To determine static pressure drop due to other options/accessories, refer to the applicable table in the fan performance section.
5. Direct drive fan motor heat is negligible.
6. Factory supplied motors, in commercial equipment, are definite purpose motors, specifically designed and tested to operate reliably and continuously at all cataloged conditions. Using the full horsepower range of our fan motors as shown in our tabular data will not result in nuisance tripping or premature motor failure. Our product's warranty will not be affected.

Table 95. Evaporator fan performance - 5 tons (model WHK), horizontal

Available External Static Pressure (Inches of Water Gauge)																				
	0.10		0.20		0.30		0.40		0.50		0.60		0.70		0.80		0.90		1.00	
CFM	RPM	BHP	RPM	BHP	RPM	BHP	RPM	BHP	RPM	BHP	RPM	BHP	RPM	BHP	RPM	BHP	RPM	BHP	RPM	BHP
1500	458	0.06	526	0.10	585	0.14	640	0.18	691	0.22	737	0.27	781	0.31	823	0.36	862	0.42	899	0.47
1600	480	0.07	545	0.11	602	0.15	655	0.19	705	0.23	751	0.28	794	0.33	835	0.38	874	0.44	911	0.49
1800	523	0.09	583	0.13	638	0.17	687	0.22	734	0.27	779	0.32	821	0.37	861	0.42	898	0.48	935	0.54
2000	569	0.11	622	0.16	674	0.20	722	0.25	766	0.30	808	0.36	849	0.41	888	0.47	925	0.53	960	0.59
2200	615	0.14	665	0.19	713	0.24	759	0.29	801	0.34	841	0.40	879	0.46	916	0.52	953	0.58	988	0.65
2400	662	0.17	708	0.22	752	0.28	796	0.33	837	0.39	876	0.45	912	0.51	948	0.57	982	0.64	1016	0.71
Available External Static Pressure (Inches of Water Gauge)																				
	1.10		1.20		1.30		1.40		1.50		1.60		1.70		1.80		1.90		2.00	
CFM	RPM	BHP	RPM	BHP	RPM	BHP	RPM	BHP	RPM	BHP	RPM	BHP	RPM	BHP	RPM	BHP	RPM	BHP	RPM	BHP
1500	935	0.52	971	0.58	1005	0.64	1038	0.7	1071	0.76	1102	0.82	1132	0.89	1161	0.95	1190	1.02	1217	1.09
1600	946	0.55	979	0.61	1013	0.67	1047	0.73	1079	0.79	1110	0.85	1140	0.92	1169	0.99	1198	1.05	1225	1.12
1800	970	0.6	1003	0.66	1035	0.72	1066	0.79	1096	0.85	1126	0.92	1156	0.99	1186	1.06	1214	1.13	1242	1.2
2000	994	0.65	1027	0.72	1059	0.78	1090	0.85	1120	0.92	1149	0.99	1177	1.06	1204	1.13	1231	1.2	1258	1.28
2200	1021	0.71	1053	0.78	1084	0.85	1115	0.92	1144	0.99	1173	1.06	1201	1.13	1228	1.21	1255	1.29	1280	1.36
2400	1049	0.77	1081	0.84	1111	0.92	1141	0.99	1170	1.06	1198	1.14	1225	1.22	1252	1.29	1279	1.37	1304	1.45

Notes:

1. Available External Static Pressure is the static pressure difference between the return duct and the supply duct plus the static pressure drop caused by accessories and options.
2. For direct drive evaporator fan speed (rpm), refer to the applicable table in the fan performance section.
3. Data includes pressure drop due to standard filters and wet coils. No accessories or options are included in pressure drop data.
4. To determine static pressure drop due to other options/accessories, refer to the applicable table in the fan performance section.
5. Direct drive fan motor heat is negligible.
6. Factory supplied motors, in commercial equipment, are definite purpose motors, specifically designed and tested to operate reliably and continuously at all cataloged conditions. Using the full horsepower range of our fan motors as shown in our tabular data will not result in nuisance tripping or premature motor failure. Our product's warranty will not be affected.

6 to 25 Tons — Downflow

Figure 13. Fan curves – 6 to 8.5 tons (models WSK, WHK), 10 tons (model WSK), downflow

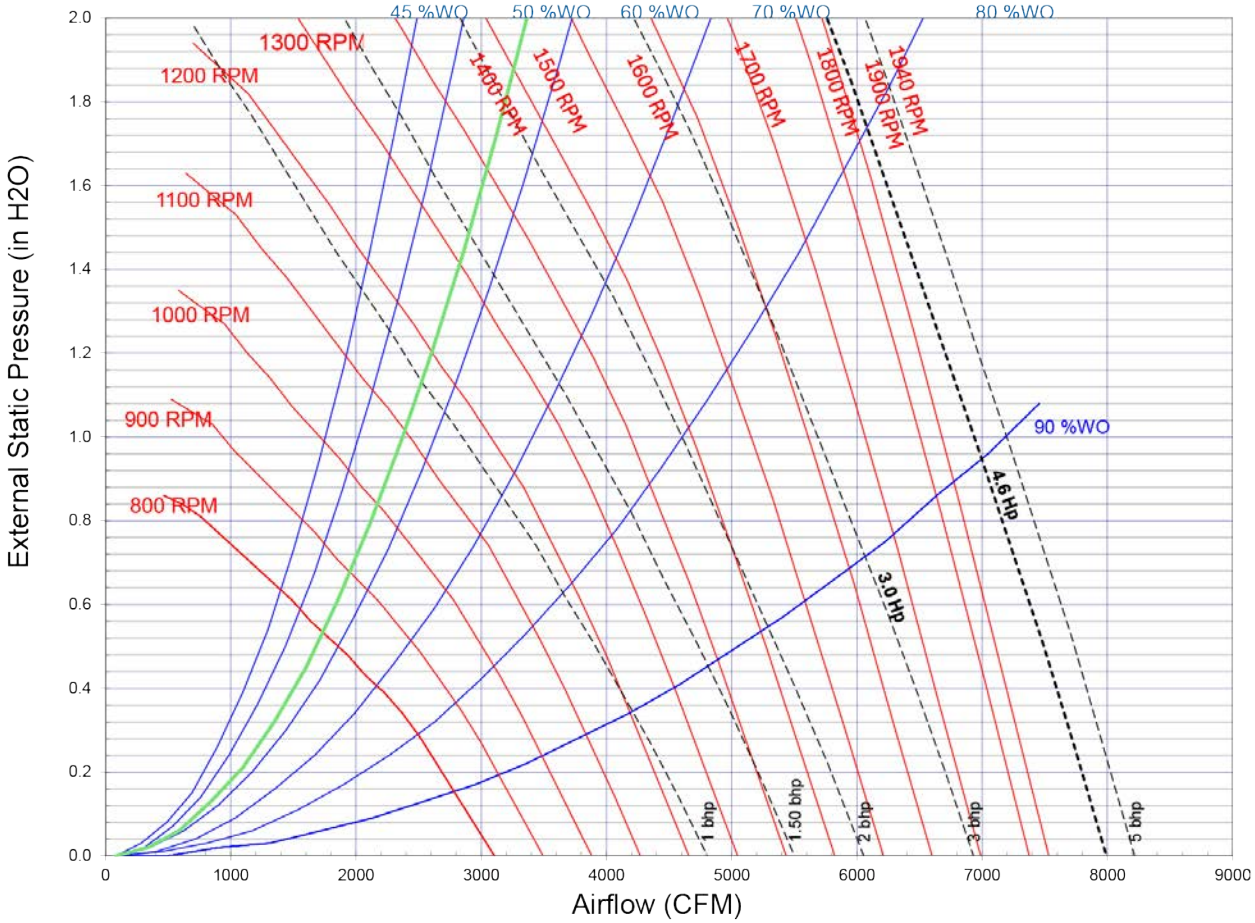

Table 96. Evaporator fan performance — 6 ton (model WSK, WHK), downflow

Available External Static Pressure (Inches of Water Gauge)																				
	0.10		0.20		0.30		0.40		0.50		0.60		0.70		0.80		0.90		1.00	
CFM	RPM	BHP	RPM	BHP	RPM	BHP	RPM	BHP	RPM	BHP	RPM	BHP	RPM	BHP	RPM	BHP	RPM	BHP	RPM	BHP
1800	543	0.10	612	0.14	677	0.20	737	0.25	791	0.31	841	0.38	888	0.44	932	0.51	973	0.58	1012	0.65
1920	570	0.11	635	0.16	697	0.21	756	0.27	809	0.34	858	0.40	905	0.47	948	0.54	990	0.61	1029	0.68
2040	597	0.12	659	0.18	718	0.23	775	0.29	828	0.36	876	0.43	922	0.50	966	0.57	1006	0.64	1045	0.72
2160	624	0.14	684	0.20	741	0.25	795	0.32	847	0.38	895	0.46	940	0.53	983	0.60	1024	0.68	1062	0.76
2280	652	0.16	710	0.22	764	0.28	815	0.34	867	0.41	914	0.48	959	0.56	1001	0.64	1041	0.72	1079	0.80
2400	680	0.18	735	0.24	787	0.30	838	0.37	886	0.44	933	0.51	977	0.59	1019	0.67	1059	0.75	1097	0.84
2520	709	0.20	762	0.26	812	0.33	860	0.40	906	0.47	953	0.55	997	0.63	1038	0.71	1077	0.79	1114	0.88
2640	737	0.22	789	0.29	837	0.36	883	0.43	928	0.50	973	0.58	1016	0.66	1057	0.75	1096	0.83	1132	0.92
2760	766	0.25	816	0.32	862	0.39	907	0.46	951	0.54	993	0.62	1036	0.70	1076	0.79	1114	0.88	1151	0.97
2880	795	0.28	843	0.35	888	0.42	932	0.50	974	0.57	1015	0.66	1055	0.74	1096	0.83	1134	0.92	1170	1.02
Available External Static Pressure (Inches of Water Gauge)																				
	1.10		1.20		1.30		1.40		1.50		1.60		1.70		1.80		1.90		2.00	
CFM	RPM	BHP	RPM	BHP	RPM	BHP	RPM	BHP	RPM	BHP	RPM	BHP	RPM	BHP	RPM	BHP	RPM	BHP	RPM	BHP
1800	1050	0.72	1086	0.79	1120	0.87	1154	0.95	1186	1.03	1217	1.11	1247	1.19	1277	1.27	1305	1.36	1333	1.45
1920	1066	0.76	1102	0.83	1136	0.91	1169	0.99	1202	1.07	1233	1.16	1263	1.24	1292	1.33	1321	1.41	1349	1.5
2040	1082	0.8	1118	0.87	1152	0.95	1185	1.04	1217	1.12	1248	1.21	1279	1.29	1308	1.38	1336	1.47	1364	1.56

Table 96. Evaporator fan performance — 6 ton (model WSK, WHK), downflow (continued)

Available External Static Pressure (Inches of Water Gauge)																				
	1.10		1.20		1.30		1.40		1.50		1.60		1.70		1.80		1.90		2.00	
CFM	RPM	BHP	RPM	BHP	RPM	BHP	RPM	BHP	RPM	BHP	RPM	BHP	RPM	BHP	RPM	BHP	RPM	BHP	RPM	BHP
2160	1099	0.84	1135	0.92	1169	1	1202	1.08	1234	1.17	1265	1.26	1295	1.35	1324	1.44	1352	1.53	1380	1.62
2280	1116	0.88	1151	0.96	1185	1.05	1218	1.13	1250	1.22	1281	1.31	1311	1.4	1340	1.49	1368	1.59	1396	1.68
2400	1133	0.92	1169	1.01	1202	1.09	1235	1.18	1266	1.27	1297	1.37	1327	1.46	1356	1.56	1384	1.65	1412	1.75
2520	1151	0.97	1186	1.05	1219	1.14	1252	1.24	1283	1.33	1314	1.42	1343	1.52	1372	1.62	1400	1.72	1428	1.82
2640	1168	1.01	1203	1.1	1237	1.2	1269	1.29	1300	1.39	1331	1.48	1360	1.58	1389	1.68	1417	1.78	1444	1.88
2760	1186	1.06	1221	1.16	1254	1.25	1286	1.35	1317	1.44	1348	1.54	1377	1.64	1406	1.75	1434	1.85	1461	1.96
2880	1205	1.11	1239	1.21	1272	1.31	1304	1.41	1335	1.51	1365	1.61	1394	1.71	1423	1.82	1450	1.92	1478	2.03

Notes:

1. Available External Static Pressure is the static pressure difference between the return duct and the supply duct plus the static pressure drop caused by accessories and options.
2. For direct drive evaporator fan speed (rpm), refer to the applicable table in the fan performance section.
3. Data includes pressure drop due to standard filters and wet coils. No accessories or options are included in pressure drop data.
4. To determine static pressure drop due to other options/accessories, refer to the applicable table in the fan performance section.
5. Direct drive fan motor heat (MBh) = 2.7912 x fan bhp + 0.1388
6. Factory supplied motors, in commercial equipment, are definite purpose motors, specifically designed and tested to operate reliably and continuously at all cataloged conditions. Using the full horsepower range of our fan motors as shown in our tabular data will not result in nuisance tripping or premature motor failure. Our product's warranty will not be affected.

Table 97. Evaporator fan performance — 7.5 ton (model WSK, WHK), downflow

Available External Static Pressure (Inches of Water Gauge)																				
	0.10		0.20		0.30		0.40		0.50		0.60		0.70		0.80		0.90		1.00	
CFM	RPM	BHP	RPM	BHP	RPM	BHP	RPM	BHP	RPM	BHP	RPM	BHP	RPM	BHP	RPM	BHP	RPM	BHP	RPM	BHP
2250	645	0.15	703	0.21	758	0.27	810	0.33	862	0.40	909	0.48	954	0.55	996	0.63	1037	0.71	1075	0.79
2400	680	0.18	735	0.24	787	0.30	838	0.37	886	0.44	933	0.51	977	0.59	1019	0.67	1059	0.75	1097	0.84
2550	716	0.21	769	0.27	818	0.34	866	0.40	912	0.48	958	0.56	1001	0.64	1042	0.72	1081	0.80	1119	0.89
2700	751	0.24	802	0.30	850	0.37	895	0.44	940	0.52	983	0.60	1026	0.68	1066	0.77	1105	0.86	1142	0.95
2850	788	0.27	836	0.34	881	0.41	925	0.49	968	0.56	1009	0.65	1050	0.73	1091	0.82	1129	0.91	1165	1.00
3000	824	0.31	870	0.38	914	0.46	956	0.53	997	0.61	1037	0.70	1076	0.78	1115	0.88	1153	0.97	1189	1.07
3150	860	0.35	905	0.43	947	0.50	988	0.58	1027	0.67	1066	0.75	1103	0.84	1140	0.93	1178	1.03	1213	1.13
3300	897	0.39	940	0.47	981	0.56	1020	0.64	1058	0.72	1095	0.81	1132	0.90	1167	1.00	1202	1.10	1238	1.20
3600	971	0.50	1011	0.58	1049	0.67	1085	0.76	1121	0.85	1156	0.95	1189	1.04	1223	1.14	1256	1.24	1288	1.35
Available External Static Pressure (Inches of Water Gauge)																				
	1.10		1.20		1.30		1.40		1.50		1.60		1.70		1.80		1.90		2.00	
CFM	RPM	BHP	RPM	BHP	RPM	BHP	RPM	BHP	RPM	BHP	RPM	BHP	RPM	BHP	RPM	BHP	RPM	BHP	RPM	BHP
2250	1112	0.87	1147	0.95	1181	1.03	1214	1.12	1246	1.21	1277	1.3	1307	1.39	1336	1.48	1364	1.57	1392	1.67
2400	1133	0.92	1169	1.01	1202	1.09	1235	1.18	1266	1.27	1297	1.37	1327	1.46	1356	1.56	1384	1.65	1412	1.75
2550	1155	0.98	1190	1.07	1224	1.16	1256	1.25	1288	1.34	1318	1.44	1348	1.54	1376	1.63	1405	1.73	1432	1.83
2700	1177	1.04	1212	1.13	1245	1.22	1278	1.32	1309	1.42	1339	1.51	1369	1.61	1397	1.71	1425	1.82	1453	1.92
2850	1200	1.1	1234	1.2	1267	1.29	1299	1.39	1330	1.49	1361	1.59	1390	1.69	1418	1.8	1446	1.9	1473	2.01
3000	1224	1.16	1257	1.26	1290	1.36	1321	1.47	1352	1.57	1382	1.67	1411	1.78	1440	1.89	1468	1.99	1495	2.1
3150	1248	1.23	1281	1.33	1313	1.44	1344	1.54	1374	1.65	1404	1.76	1433	1.87	1461	1.98	1489	2.09	1516	2.2
3300	1272	1.3	1305	1.41	1337	1.52	1367	1.62	1397	1.73	1426	1.85	1455	1.96	1483	2.07	1511	2.19	1537	2.3
3600	1321	1.46	1354	1.57	1385	1.68	1415	1.8	1445	1.91	1473	2.03	1501	2.15	1528	2.27	1555	2.39	1581	2.51

Notes:

1. Available External Static Pressure is the static pressure difference between the return duct and the supply duct plus the static pressure drop caused by accessories and options.
2. For direct drive evaporator fan speed (rpm), refer to the applicable table in the fan performance section.
3. Data includes pressure drop due to standard filters and wet coils. No accessories or options are included in pressure drop data.
4. To determine static pressure drop due to other options/accessories, refer to the applicable table in the fan performance section.
5. Direct drive fan motor heat (MBh) = 2.7912 x fan bhp + 0.1388
6. Factory supplied motors, in commercial equipment, are definite purpose motors, specifically designed and tested to operate reliably and continuously at all cataloged conditions. Using the full horsepower range of our fan motors as shown in our tabular data will not result in nuisance tripping or premature motor failure. Our product's warranty will not be affected.

Evaporator Fan Performance — Heat Pump

Table 98. Evaporator fan performance — 8.5 ton (model WSK, WHK), downflow

Available External Static Pressure (Inches of Water Gauge)																				
	0.10		0.20		0.30		0.40		0.50		0.60		0.70		0.80		0.90		1.00	
CFM	RPM	BHP	RPM	BHP	RPM	BHP	RPM	BHP	RPM	BHP	RPM	BHP	RPM	BHP	RPM	BHP	RPM	BHP	RPM	BHP
2550	716	0.21	769	0.27	818	0.34	866	0.40	912	0.48	958	0.56	1001	0.64	1042	0.72	1081	0.80	1119	0.89
2720	756	0.24	807	0.31	854	0.38	899	0.45	943	0.53	986	0.60	1029	0.69	1070	0.77	1108	0.86	1145	0.95
2890	797	0.28	845	0.35	890	0.42	934	0.50	975	0.58	1017	0.66	1057	0.74	1097	0.83	1135	0.93	1172	1.02
3060	838	0.33	884	0.40	927	0.48	969	0.55	1009	0.63	1048	0.72	1087	0.81	1125	0.90	1163	0.99	1199	1.09
3230	880	0.37	923	0.45	965	0.53	1005	0.61	1044	0.70	1081	0.78	1118	0.87	1154	0.97	1191	1.07	1226	1.17
3400	921	0.43	963	0.51	1003	0.59	1041	0.68	1079	0.77	1115	0.85	1150	0.95	1186	1.04	1219	1.14	1254	1.25
3570	963	0.49	1003	0.57	1042	0.66	1079	0.75	1114	0.84	1150	0.93	1183	1.03	1218	1.13	1251	1.23	1283	1.33
3740	1005	0.55	1044	0.64	1081	0.73	1117	0.82	1151	0.92	1185	1.01	1218	1.11	1250	1.21	1283	1.32	1314	1.42
4080	1089	0.70	1126	0.79	1160	0.89	1193	0.99	1226	1.09	1257	1.20	1288	1.30	1319	1.41	1348	1.52	1378	1.63
Available External Static Pressure (Inches of Water Gauge)																				
	1.10		1.20		1.30		1.40		1.50		1.60		1.70		1.80		1.90		2.00	
CFM	RPM	BHP	RPM	BHP	RPM	BHP	RPM	BHP	RPM	BHP	RPM	BHP	RPM	BHP	RPM	BHP	RPM	BHP	RPM	BHP
2550	1155	0.98	1190	1.07	1224	1.16	1256	1.25	1288	1.34	1318	1.44	1348	1.54	1376	1.63	1405	1.73	1432	1.83
2720	1180	1.05	1215	1.14	1248	1.23	1280	1.33	1312	1.42	1342	1.52	1371	1.62	1400	1.72	1428	1.83	1455	1.93
2890	1207	1.12	1240	1.21	1273	1.31	1305	1.41	1336	1.51	1366	1.61	1396	1.72	1424	1.82	1452	1.93	1479	2.03
3060	1234	1.19	1267	1.29	1299	1.39	1330	1.5	1361	1.6	1391	1.71	1420	1.81	1448	1.92	1476	2.03	1503	2.14
3230	1261	1.27	1294	1.37	1326	1.48	1357	1.59	1386	1.7	1416	1.8	1445	1.91	1473	2.03	1501	2.14	1527	2.25
3400	1288	1.35	1321	1.46	1353	1.57	1383	1.68	1413	1.79	1442	1.91	1470	2.02	1498	2.14	1525	2.25	1552	2.37
3570	1316	1.44	1349	1.55	1380	1.66	1410	1.78	1440	1.89	1469	2.01	1496	2.13	1524	2.25	1550	2.37	1577	2.49
3740	1345	1.53	1377	1.65	1408	1.76	1438	1.88	1467	2	1496	2.12	1523	2.24	1550	2.37	1577	2.49	1603	2.62
4080	1408	1.74	1436	1.86	1464	1.98	1494	2.1	1522	2.23	1550	2.36	1578	2.49	1604	2.62	1630	2.75	1656	2.88

Notes:

1. Available External Static Pressure is the static pressure difference between the return duct and the supply duct plus the static pressure drop caused by accessories and options.
2. For direct drive evaporator fan speed (rpm), refer to the applicable table in the fan performance section.
3. Data includes pressure drop due to standard filters and wet coils. No accessories or options are included in pressure drop data.
4. To determine static pressure drop due to other options/accessories, refer to the applicable table in the fan performance section.
5. Direct drive fan motor heat (MBh) = 2.7912 x fan bhp + 0.1388
6. Factory supplied motors, in commercial equipment, are definite purpose motors, specifically designed and tested to operate reliably and continuously at all cataloged conditions. Using the full horsepower range of our fan motors as shown in our tabular data will not result in nuisance tripping or premature motor failure. Our product's warranty will not be affected.

Table 99. Evaporator fan performance - 10 ton (model WSK), downflow

Available External Static Pressure (Inches of Water Gauge)																				
	0.10		0.20		0.30		0.40		0.50		0.60		0.70		0.80		0.90		1.00	
CFM	RPM	BHP	RPM	BHP	RPM	BHP	RPM	BHP	RPM	BHP	RPM	BHP	RPM	BHP	RPM	BHP	RPM	BHP	RPM	BHP
3000	824	0.31	870	0.38	914	0.46	956	0.53	997	0.61	1037	0.70	1076	0.78	1115	0.88	1153	0.97	1189	1.07
3200	872	0.36	916	0.44	958	0.52	998	0.60	1037	0.69	1075	0.77	1113	0.86	1148	0.95	1186	1.05	1222	1.15
3400	921	0.43	963	0.51	1003	0.59	1041	0.68	1079	0.77	1115	0.85	1150	0.95	1186	1.04	1219	1.14	1254	1.25
3600	971	0.50	1011	0.58	1049	0.67	1085	0.76	1121	0.85	1156	0.95	1189	1.04	1223	1.14	1256	1.24	1288	1.35
3800	1020	0.57	1058	0.66	1094	0.76	1130	0.85	1164	0.95	1198	1.04	1230	1.14	1262	1.24	1294	1.35	1325	1.46
4000	1070	0.66	1106	0.75	1141	0.85	1175	0.95	1208	1.05	1240	1.15	1272	1.25	1302	1.36	1332	1.47	1363	1.58
4200	1119	0.76	1155	0.85	1188	0.95	1221	1.06	1253	1.16	1283	1.27	1314	1.37	1344	1.48	1373	1.59	1401	1.71
4400	1169	0.86	1203	0.96	1236	1.07	1266	1.17	1298	1.28	1327	1.39	1356	1.50	1385	1.62	1414	1.73	1441	1.85
4600	1219	0.97	1252	1.08	1283	1.19	1313	1.30	1343	1.41	1372	1.53	1400	1.64	1428	1.76	1455	1.88	1483	2.00
4800	1269	1.10	1301	1.20	1331	1.32	1360	1.43	1388	1.55	1417	1.67	1444	1.79	1471	1.91	1497	2.03	1524	2.16

Table 99. Evaporator fan performance - 10 ton (model WSK), downflow (continued)

	Available External Static Pressure (Inches of Water Gauge)																			
	1.10		1.20		1.30		1.40		1.50		1.60		1.70		1.80		1.90		2.00	
CFM	RPM	BHP	RPM	BHP	RPM	BHP	RPM	BHP	RPM	BHP	RPM	BHP	RPM	BHP	RPM	BHP	RPM	BHP	RPM	BHP
3000	1224	1.16	1257	1.26	1290	1.36	1321	1.47	1352	1.57	1382	1.67	1411	1.78	1440	1.89	1468	1.99	1495	2.1
3200	1256	1.25	1289	1.36	1321	1.46	1352	1.57	1382	1.68	1411	1.79	1440	1.9	1469	2.01	1496	2.12	1523	2.23
3400	1288	1.35	1321	1.46	1353	1.57	1383	1.68	1413	1.79	1442	1.91	1470	2.02	1498	2.14	1525	2.25	1552	2.37
3600	1321	1.46	1354	1.57	1385	1.68	1415	1.8	1445	1.91	1473	2.03	1501	2.15	1528	2.27	1555	2.39	1581	2.51
3800	1356	1.57	1387	1.68	1418	1.8	1448	1.92	1477	2.04	1505	2.16	1533	2.28	1560	2.41	1586	2.53	1612	2.66
4000	1393	1.69	1422	1.81	1451	1.92	1480	2.05	1509	2.17	1537	2.3	1565	2.43	1592	2.55	1618	2.69	1643	2.82
4200	1430	1.82	1459	1.94	1486	2.06	1514	2.19	1542	2.31	1570	2.44	1597	2.58	1624	2.71	1650	2.84	-	-
4400	1469	1.97	1497	2.09	1524	2.21	1550	2.34	1576	2.47	1603	2.6	1630	2.73	1656	2.87	-	-	-	-
4600	1509	2.12	1535	2.24	1561	2.37	1588	2.5	1613	2.63	1638	2.76	1663	2.9	-	-	-	-	-	-
4800	1550	2.28	1575	2.41	1600	2.54	1625	2.67	1651	2.81	1675	2.94	-	-	-	-	-	-	-	-

Notes:

1. Available External Static Pressure is the static pressure difference between the return duct and the supply duct plus the static pressure drop caused by accessories and options.
2. For direct drive evaporator fan speed (rpm), refer to the applicable table in the fan performance section.
3. Data includes pressure drop due to standard filters and wet coils. No accessories or options are included in pressure drop data.
4. To determine static pressure drop due to other options/accessories, refer to the applicable table in the fan performance section.
5. Direct drive fan motor heat (MBh) = 2.7912 x fan bhp + 0.1388
6. Factory supplied motors, in commercial equipment, are definite purpose motors, specifically designed and tested to operate reliably and continuously at all cataloged conditions. Using the full horsepower range of our fan motors as shown in our tabular data will not result in nuisance tripping or premature motor failure. Our product's warranty will not be affected.

Figure 14. Fan curves — 10 ton (model WHK), downflow

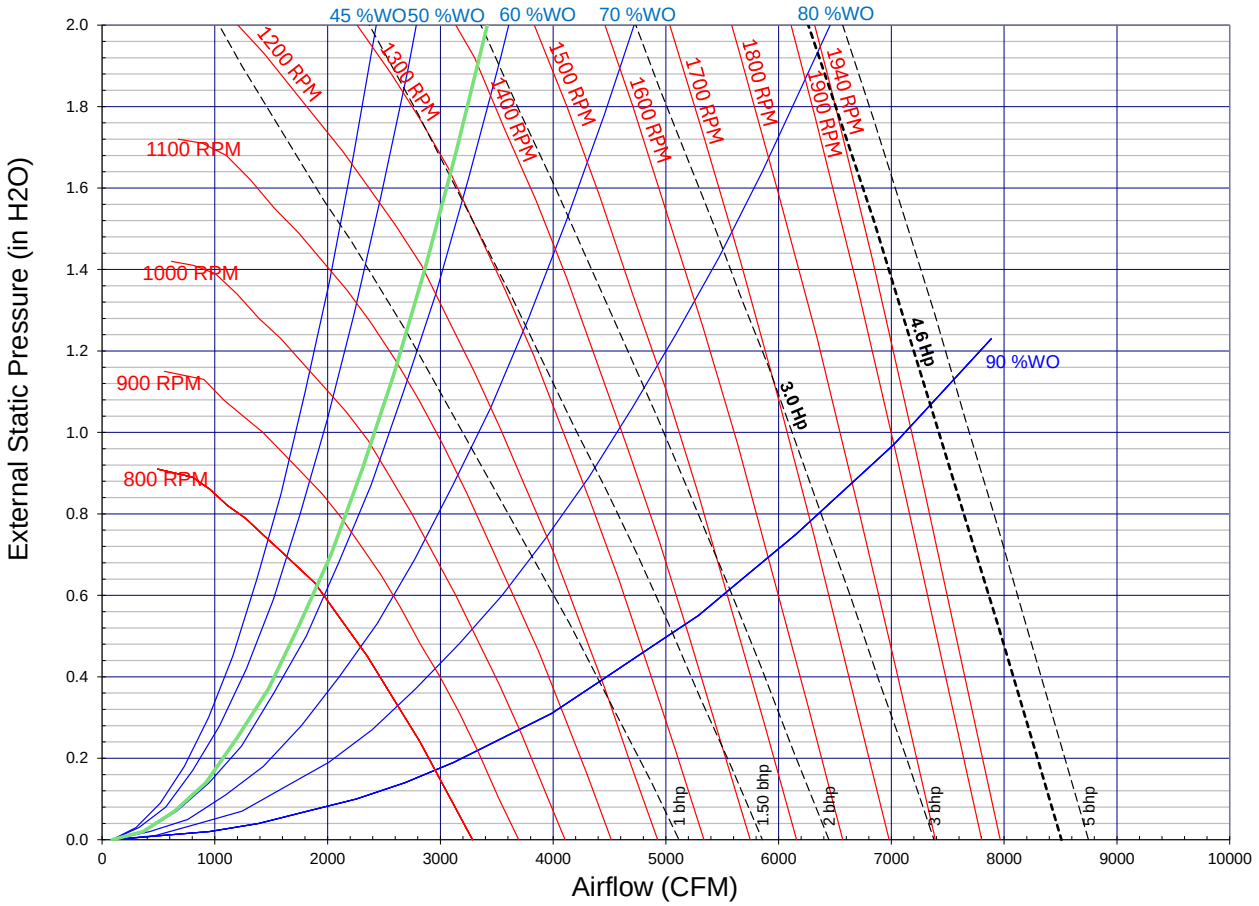

Evaporator Fan Performance — Heat Pump

Table 100. Evaporator fan performance - 10 ton (model WHK), downflow

Available External Static Pressure (Inches of Water Gauge)																				
	0.10		0.20		0.30		0.40		0.50		0.60		0.70		0.80		0.90		1.00	
CFM	RPM	BHP	RPM	BHP	RPM	BHP	RPM	BHP	RPM	BHP	RPM	BHP	RPM	BHP	RPM	BHP	RPM	BHP	RPM	BHP
3000	778	0.26	821	0.33	862	0.39	902	0.46	940	0.54	976	0.61	1010	0.69	1042	0.76	1074	0.84	1106	0.92
3200	824	0.31	865	0.38	904	0.45	942	0.52	978	0.60	1013	0.68	1046	0.75	1078	0.83	1108	0.92	1138	1.00
3400	871	0.36	910	0.44	946	0.51	982	0.59	1017	0.66	1051	0.75	1084	0.83	1115	0.91	1145	1.00	1173	1.08
3600	917	0.42	954	0.50	990	0.58	1024	0.65	1057	0.74	1090	0.82	1121	0.91	1152	1.00	1181	1.09	1209	1.18
3800	964	0.49	1000	0.57	1034	0.65	1066	0.73	1098	0.82	1129	0.91	1160	1.00	1190	1.09	1219	1.18	1246	1.28
4000	1011	0.56	1045	0.65	1078	0.73	1109	0.82	1139	0.90	1170	1.00	1199	1.09	1228	1.18	1256	1.28	1283	1.38
4200	1058	0.64	1091	0.73	1122	0.82	1152	0.91	1181	1.00	1211	1.09	1239	1.19	1267	1.29	1294	1.39	1321	1.49
4400	1105	0.73	1137	0.82	1167	0.91	1196	1.01	1224	1.10	1252	1.20	1280	1.30	1307	1.40	1333	1.51	1359	1.61
4600																				
4800	1200	0.93	1229	1.03	1257	1.13	1285	1.23	1311	1.33	1337	1.43	1362	1.54	1388	1.65	1413	1.76	1437	1.87
Available External Static Pressure (Inches of Water Gauge)																				
	1.10		1.20		1.30		1.40		1.50		1.60		1.70		1.80		1.90		2.00	
CFM	RPM	BHP	RPM	BHP	RPM	BHP	RPM	BHP	RPM	BHP	RPM	BHP	RPM	BHP	RPM	BHP	RPM	BHP	RPM	BHP
3000	1137	1	1167	1.08	1195	1.17	1223	1.25	1250	1.34	1277	1.43	1305	1.52	1332	1.61	1358	1.71	1384	1.8
3200	1169	1.08	1198	1.17	1226	1.26	1254	1.35	1281	1.44	1306	1.53	1332	1.62	1357	1.72	1383	1.81	1409	1.91
3400	1201	1.17	1230	1.26	1258	1.35	1285	1.45	1312	1.54	1337	1.63	1362	1.73	1387	1.83	1410	1.93	1434	2.03
3600	1237	1.27	1263	1.36	1290	1.45	1317	1.55	1343	1.65	1369	1.75	1393	1.85	1417	1.95	1441	2.05	1464	2.15
3800	1273	1.37	1299	1.47	1324	1.56	1349	1.66	1375	1.76	1400	1.86	1425	1.97	1449	2.07	1472	2.18	1495	2.28
4000	1310	1.48	1335	1.58	1360	1.68	1384	1.78	1408	1.89	1432	1.99	1457	2.1	1480	2.2	1503	2.31	1526	2.42
4200	1347	1.6	1372	1.7	1396	1.8	1420	1.91	1443	2.02	1466	2.12	1489	2.23	1512	2.34	1535	2.46	1558	2.57
4400	1384	1.72	1409	1.83	1433	1.94	1457	2.05	1480	2.16	1502	2.27	1524	2.38	1545	2.49	1568	2.61	1590	2.72
4600																				
4800	1461	1.99	1485	2.1	1508	2.22	1531	2.34	1553	2.46	1575	2.58	1596	2.7	1617	2.82	1638	2.94	1658	3.06

Notes:

1. Available External Static Pressure is the static pressure difference between the return duct and the supply duct plus the static pressure drop caused by accessories and options.
2. For direct drive evaporator fan speed (rpm), refer to the applicable table in the fan performance section.
3. Data includes pressure drop due to standard filters and wet coils. No accessories or options are included in pressure drop data.
4. To determine static pressure drop due to other options/accessories, refer to the applicable table in the fan performance section.
5. Direct drive fan motor heat (MBh) = 2.7912 x fan bhp + 0.1388
6. Factory supplied motors, in commercial equipment, are definite purpose motors, specifically designed and tested to operate reliably and continuously at all cataloged conditions. Using the full horsepower range of our fan motors as shown in our tabular data will not result in nuisance tripping or premature motor failure. Our product's warranty will not be affected.

Figure 15. Fan curves — 12.5 to 25 tons (model WSK, WHK), downflow

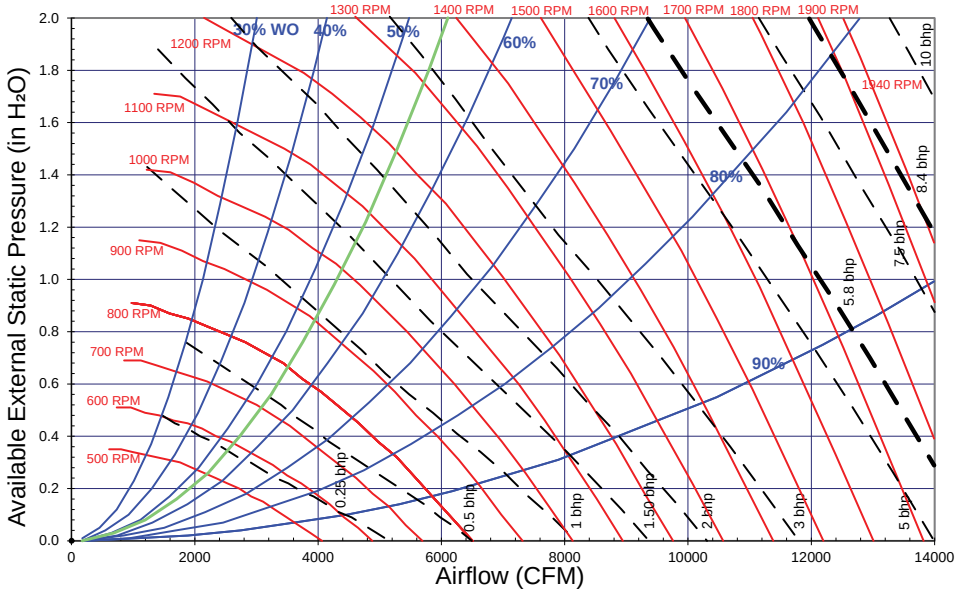

Table 101. Evaporator fan performance - 12.5 ton (model WSK, WHK), downflow

Available External Static Pressure (Inches of Water Gauge)																				
	0.10		0.20		0.30		0.40		0.50		0.60		0.70		0.80		0.90		1.00	
CFM	RPM	BHP	RPM	BHP	RPM	BHP	RPM	BHP	RPM	BHP	RPM	BHP	RPM	BHP	RPM	BHP	RPM	BHP	RPM	BHP
3750	541	0.19	604	0.28	661	0.37	713	0.47	761	0.58	807	0.69	850	0.80	891	0.91	930	1.03	968	1.16
4000	568	0.21	629	0.31	684	0.41	734	0.51	781	0.62	825	0.74	868	0.85	908	0.97	947	1.10	983	1.22
4500	625	0.28	679	0.38	731	0.49	779	0.61	823	0.73	866	0.85	905	0.97	944	1.10	982	1.23	1018	1.37
5000	683	0.35	732	0.47	780	0.58	826	0.71	868	0.84	908	0.97	947	1.11	983	1.24	1018	1.38	1053	1.53
5500	742	0.45	786	0.57	831	0.69	874	0.83	915	0.97	953	1.11	989	1.26	1025	1.40	1059	1.55	1092	1.70
6000	801	0.55	842	0.68	883	0.82	924	0.96	962	1.11	999	1.26	1035	1.42	1068	1.58	1102	1.74	1133	1.90
Available External Static Pressure (Inches of Water Gauge)																				
	1.10		1.20		1.30		1.40		1.50		1.60		1.70		1.80		1.90		2.00	
CFM	RPM	BHP	RPM	BHP	RPM	BHP	RPM	BHP	RPM	BHP	RPM	BHP	RPM	BHP	RPM	BHP	RPM	BHP	RPM	BHP
3750	1005	1.29	1040	1.43	1074	1.57	1106	1.71	1137	1.86	1168	2	1198	2.15	1228	2.31	1257	2.46	1285	2.62
4000	1019	1.36	1054	1.5	1088	1.64	1120	1.79	1152	1.94	1182	2.09	1211	2.24	1240	2.4	1269	2.56	1297	2.72
4500	1052	1.51	1085	1.65	1117	1.79	1149	1.95	1180	2.1	1211	2.26	1240	2.43	1268	2.59	1296	2.76	1323	2.93
5000	1087	1.67	1120	1.82	1151	1.98	1182	2.13	1211	2.29	1240	2.45	1269	2.62	1297	2.79	1325	2.97	1352	3.15
5500	1123	1.86	1155	2.02	1186	2.18	1216	2.34	1246	2.51	1274	2.68	1302	2.85	1328	3.02	1354	3.2	1381	3.38
6000	1164	2.06	1194	2.23	1223	2.4	1252	2.57	1281	2.74	1309	2.92	1336	3.1	1363	3.28	1389	3.47	1414	3.66

Notes:

1. Available External Static Pressure is the static pressure difference between the return duct and the supply duct plus the static pressure drop caused by accessories and options.
2. For direct drive evaporator fan speed (rpm), refer to the applicable table in the fan performance section.
3. Data includes pressure drop due to standard filters and wet coils. No accessories or options are included in pressure drop data.
4. To determine static pressure drop due to other options/accessories, refer to the applicable table in the fan performance section.
5. Direct drive fan motor heat is negligible.
6. Factory supplied motors, in commercial equipment, are definite purpose motors, specifically designed and tested to operate reliably and continuously at all cataloged conditions. Using the full horsepower range of our fan motors as shown in our tabular data will not result in nuisance tripping or premature motor failure. Our product's warranty will not be affected.

Evaporator Fan Performance — Heat Pump

Table 102. Evaporator fan performance - 15 ton (model WSK, WHK), downflow

Available External Static Pressure (Inches of Water Gauge)																				
	0.10		0.20		0.30		0.40		0.50		0.60		0.70		0.80		0.90		1.00	
CFM	RPM	BHP	RPM	BHP	RPM	BHP	RPM	BHP	RPM	BHP	RPM	BHP	RPM	BHP	RPM	BHP	RPM	BHP	RPM	BHP
4500	625	0.28	679	0.38	731	0.49	779	0.61	823	0.73	866	0.85	905	0.97	944	1.10	982	1.23	1018	1.37
4800	660	0.32	711	0.43	760	0.54	807	0.67	850	0.79	891	0.92	930	1.05	967	1.18	1003	1.32	1039	1.46
5400	730	0.43	775	0.54	821	0.67	864	0.80	905	0.94	944	1.08	981	1.22	1017	1.37	1051	1.52	1084	1.67
6000	801	0.55	842	0.68	883	0.82	924	0.96	962	1.11	999	1.26	1035	1.42	1068	1.58	1102	1.74	1133	1.90
6600	873	0.71	911	0.85	948	1.00	985	1.15	1022	1.31	1057	1.47	1091	1.63	1123	1.81	1155	1.98	1185	2.16
7200	945	0.89	981	1.04	1014	1.20	1049	1.36	1083	1.53	1116	1.70	1148	1.88	1180	2.06	1210	2.25	1239	2.43
Available External Static Pressure (Inches of Water Gauge)																				
	1.10		1.20		1.30		1.40		1.50		1.60		1.70		1.80		1.90		2.00	
CFM	RPM	BHP	RPM	BHP	RPM	BHP	RPM	BHP	RPM	BHP	RPM	BHP	RPM	BHP	RPM	BHP	RPM	BHP	RPM	BHP
4500	1052	1.51	1085	1.65	1117	1.79	1149	1.95	1180	2.1	1211	2.26	1240	2.43	1268	2.59	1296	2.76	1323	2.93
4800	1073	1.61	1106	1.75	1137	1.9	1168	2.05	1198	2.21	1228	2.37	1257	2.54	1286	2.71	1313	2.88	1340	3.06
5400	1115	1.82	1148	1.98	1179	2.14	1209	2.3	1239	2.46	1267	2.63	1295	2.8	1322	2.97	1348	3.15	1375	3.33
6000	1164	2.06	1194	2.23	1223	2.4	1252	2.57	1281	2.74	1309	2.92	1336	3.1	1363	3.28	1389	3.47	1414	3.66
6600	1215	2.33	1244	2.51	1272	2.69	1300	2.87	1326	3.05	1352	3.24	1379	3.43	1405	3.62	1431	3.82	1456	4.02
7200	1268	2.63	1295	2.82	1323	3.01	1350	3.2	1376	3.4	1401	3.6	1426	3.79	1450	4	1474	4.2	1498	4.41

Notes:

1. Available External Static Pressure is the static pressure difference between the return duct and the supply duct plus the static pressure drop caused by accessories and options.
2. For direct drive evaporator fan speed (rpm), refer to the applicable table in the fan performance section.
3. Data includes pressure drop due to standard filters and wet coils. No accessories or options are included in pressure drop data.
4. To determine static pressure drop due to other options/accessories, refer to the applicable table in the fan performance section.
5. Direct drive fan motor heat is negligible.
6. Factory supplied motors, in commercial equipment, are definite purpose motors, specifically designed and tested to operate reliably and continuously at all cataloged conditions. Using the full horsepower range of our fan motors as shown in our tabular data will not result in nuisance tripping or premature motor failure. Our product's warranty will not be affected.

Table 103. Evaporator fan performance - 17.5 ton (model WSK, WHK), downflow

Available External Static Pressure (Inches of Water Gauge)																				
	0.10		0.20		0.30		0.40		0.50		0.60		0.70		0.80		0.90		1.00	
CFM	RPM	BHP	RPM	BHP	RPM	BHP	RPM	BHP	RPM	BHP	RPM	BHP	RPM	BHP	RPM	BHP	RPM	BHP	RPM	BHP
5250	712	0.40	759	0.51	805	0.64	850	0.77	891	0.90	930	1.04	968	1.18	1004	1.32	1039	1.47	1072	1.61
5600	753	0.47	797	0.59	841	0.72	883	0.85	924	0.99	962	1.14	998	1.29	1034	1.44	1067	1.59	1100	1.74
6300	837	0.63	876	0.76	915	0.91	954	1.05	992	1.20	1028	1.36	1063	1.52	1096	1.69	1127	1.86	1159	2.02
7000	921	0.83	957	0.98	992	1.13	1027	1.29	1062	1.45	1096	1.62	1129	1.80	1161	1.97	1191	2.15	1221	2.34
7700	1006	1.07	1040	1.23	1071	1.40	1103	1.57	1135	1.75	1167	1.93	1198	2.11	1228	2.30	1258	2.49	1286	2.69
8400	1091	1.35	1123	1.53	1152	1.71	1181	1.89	1211	2.08	1240	2.28	1269	2.47	1298	2.67	1325	2.88	1353	3.09
Available External Static Pressure (Inches of Water Gauge)																				
	1.10		1.20		1.30		1.40		1.50		1.60		1.70		1.80		1.90		2.00	
CFM	RPM	BHP	RPM	BHP	RPM	BHP	RPM	BHP	RPM	BHP	RPM	BHP	RPM	BHP	RPM	BHP	RPM	BHP	RPM	BHP
5250	1105	1.76	1137	1.92	1169	2.08	1199	2.24	1228	2.4	1257	2.56	1284	2.73	1312	2.9	1339	3.08	1366	3.26
5600	1132	1.9	1162	2.06	1193	2.22	1223	2.39	1253	2.55	1281	2.73	1308	2.9	1335	3.07	1361	3.25	1387	3.43
6300	1189	2.19	1219	2.37	1247	2.54	1275	2.72	1302	2.89	1330	3.08	1357	3.26	1384	3.45	1410	3.64	1435	3.83
7000	1250	2.53	1278	2.71	1306	2.9	1333	3.09	1359	3.28	1385	3.47	1410	3.67	1434	3.87	1459	4.07	1484	4.27
7700	1314	2.89	1340	3.09	1366	3.3	1393	3.5	1418	3.71	1443	3.91	1467	4.12	1491	4.33	1515	4.55	1538	4.76

Table 103. Evaporator fan performance - 17.5 ton (model WSK, WHK), downflow (continued)

	Available External Static Pressure (Inches of Water Gauge)																			
	1.10		1.20		1.30		1.40		1.50		1.60		1.70		1.80		1.90		2.00	
CFM	RPM	BHP	RPM	BHP	RPM	BHP	RPM	BHP	RPM	BHP	RPM	BHP	RPM	BHP	RPM	BHP	RPM	BHP	RPM	BHP
8400	1380	3.3	1405	3.51	1431	3.73	1455	3.95	1479	4.18	1503	4.4	1527	4.62	1550	4.85	1573	5.07	1596	5.3

Notes:

1. Available External Static Pressure is the static pressure difference between the return duct and the supply duct plus the static pressure drop caused by accessories and options.
2. For direct drive evaporator fan speed (rpm), refer to the applicable table in the fan performance section.
3. Data includes pressure drop due to standard filters and wet coils. No accessories or options are included in pressure drop data.
4. To determine static pressure drop due to other options/accessories, refer to the applicable table in the fan performance section.
5. Direct drive fan motor heat is negligible.
6. Factory supplied motors, in commercial equipment, are definite purpose motors, specifically designed and tested to operate reliably and continuously at all cataloged conditions. Using the full horsepower range of our fan motors as shown in our tabular data will not result in nuisance tripping or premature motor failure. Our product's warranty will not be affected.

Table 104. Evaporator fan performance - 17.5 ton (model WSK, WHK), downflow, high static motor

	Available External Static Pressure (Inches of Water Gauge)																			
	0.10		0.20		0.30		0.40		0.50		0.60		0.70		0.80		0.90		1.00	
CFM	RPM	BHP	RPM	BHP	RPM	BHP	RPM	BHP	RPM	BHP	RPM	BHP	RPM	BHP	RPM	BHP	RPM	BHP	RPM	BHP
3000	797	0.29	843	0.36	887	0.44	928	0.51	968	0.59	1007	0.67	1044	0.76	1082	0.85	1117	0.94	1151	1.03
3200	844	0.34	888	0.42	929	0.49	969	0.58	1007	0.66	1044	0.74	1080	0.83	1115	0.93	1150	1.02	1184	1.12
3400	891	0.40	932	0.48	973	0.56	1011	0.65	1047	0.73	1083	0.82	1117	0.91	1151	1.01	1184	1.11	1217	1.21
3600	938	0.46	978	0.55	1016	0.63	1053	0.72	1088	0.81	1122	0.91	1155	1.00	1188	1.10	1219	1.20	1251	1.30
3800	986	0.53	1024	0.62	1061	0.71	1096	0.81	1130	0.90	1163	1.00	1194	1.10	1226	1.20	1257	1.30	1286	1.41
4000	1033	0.61	1070	0.71	1105	0.80	1139	0.90	1172	1.00	1204	1.10	1235	1.20	1264	1.30	1294	1.41	1324	1.52
4200	1081	0.70	1117	0.80	1150	0.90	1183	1.00	1215	1.10	1245	1.21	1275	1.31	1304	1.42	1333	1.53	1361	1.64
4400	1129	0.80	1163	0.90	1196	1.00	1227	1.10	1258	1.21	1287	1.32	1317	1.43	1345	1.54	1372	1.66	1400	1.77
4600	1178	0.90	1210	1.01	1242	1.11	1272	1.22	1302	1.33	1330	1.45	1358	1.56	1386	1.68	1413	1.80	1439	1.91
4800	1226	1.01	1258	1.12	1288	1.23	1317	1.35	1346	1.46	1374	1.58	1401	1.70	1428	1.82	1454	1.94	1480	2.06
	Available External Static Pressure (Inches of Water Gauge)																			
	1.10		1.20		1.30		1.40		1.50		1.60		1.70		1.80		1.90		2.00	
CFM	RPM	BHP	RPM	BHP	RPM	BHP	RPM	BHP	RPM	BHP	RPM	BHP	RPM	BHP	RPM	BHP	RPM	BHP	RPM	BHP
3000	1184	1.13	1215	1.22	1246	1.32	1278	1.42	1308	1.53	1338	1.64	1366	1.74	1394	1.85	1421	1.96	1448	2.08
3200	1216	1.21	1247	1.31	1277	1.42	1306	1.52	1336	1.63	1365	1.74	1393	1.85	1421	1.96	1448	2.08	1475	2.19
3400	1249	1.31	1280	1.41	1309	1.52	1338	1.63	1366	1.73	1393	1.84	1421	1.96	1449	2.08	1475	2.19	1502	2.31
3600	1282	1.41	1313	1.52	1342	1.63	1370	1.74	1398	1.85	1425	1.96	1451	2.08	1476	2.2	1503	2.32	1529	2.44
3800	1316	1.52	1346	1.63	1375	1.74	1403	1.86	1430	1.97	1457	2.09	1483	2.21	1508	2.33	1533	2.45	1557	2.58
4000	1352	1.63	1380	1.75	1408	1.87	1436	1.98	1463	2.11	1490	2.23	1515	2.35	1540	2.47	1565	2.6	1589	2.73
4200	1389	1.76	1416	1.88	1442	2	1470	2.12	1497	2.24	1523	2.37	1548	2.5	1573	2.62	1597	2.75	1621	2.88
4400	1427	1.89	1453	2.01	1479	2.14	1504	2.26	1530	2.39	1556	2.52	1581	2.65	1606	2.78	1630	2.92	1654	3.05
4600	1465	2.04	1491	2.16	1516	2.29	1541	2.42	1565	2.54	1590	2.68	1615	2.81	1639	2.95	1663	3.09	1687	3.22
4800	1504	2.19	1529	2.32	1554	2.45	1579	2.58	1602	2.71	1626	2.85	1649	2.98	1673	3.12	1697	3.26	1720	3.41

Notes:

1. Available External Static Pressure is the static pressure difference between the return duct and the supply duct plus the static pressure drop caused by accessories and options.
2. For direct drive evaporator fan speed (rpm), refer to the applicable table in the fan performance section.
3. Data includes pressure drop due to standard filters and wet coils. No accessories or options are included in pressure drop data.
4. To determine static pressure drop due to other options/accessories, refer to the applicable table in the fan performance section.
5. Direct drive fan motor heat is negligible.
6. Factory supplied motors, in commercial equipment, are definite purpose motors, specifically designed and tested to operate reliably and continuously at all cataloged conditions. Using the full horsepower range of our fan motors as shown in our tabular data will not result in nuisance tripping or premature motor failure. Our product's warranty will not be affected.

Evaporator Fan Performance — Heat Pump

Table 105. Evaporator fan performance - 20 ton (model WSK, WHK), downflow

Available External Static Pressure (Inches of Water Gauge)																				
	0.10		0.20		0.30		0.40		0.50		0.60		0.70		0.80		0.90		1.00	
CFM	RPM	BHP	RPM	BHP	RPM	BHP	RPM	BHP	RPM	BHP	RPM	BHP	RPM	BHP	RPM	BHP	RPM	BHP	RPM	BHP
6000	785	0.51	827	0.64	868	0.77	907	0.91	945	1.05	981	1.20	1016	1.35	1049	1.50	1081	1.65	1112	1.80
6400	831	0.61	872	0.74	911	0.88	948	1.02	984	1.17	1019	1.33	1053	1.48	1085	1.64	1116	1.80	1146	1.96
7200	925	0.83	962	0.97	997	1.13	1031	1.28	1064	1.45	1096	1.61	1128	1.79	1158	1.96	1188	2.14	1217	2.32
8000	1020	1.09	1054	1.26	1086	1.42	1117	1.60	1148	1.77	1177	1.95	1206	2.14	1235	2.33	1263	2.52	1290	2.72
8800	1115	1.42	1146	1.60	1176	1.78	1205	1.96	1233	2.15	1261	2.35	1288	2.55	1314	2.75	1341	2.96	1367	3.17
9600	1211	1.81	1240	2.00	1268	2.20	1295	2.39	1321	2.60	1347	2.81	1372	3.02	1397	3.24	1421	3.46	1445	3.68
Available External Static Pressure (Inches of Water Gauge)																				
	1.10		1.20		1.30		1.40		1.50		1.60		1.70		1.80		1.90		2.00	
CFM	RPM	BHP	RPM	BHP	RPM	BHP	RPM	BHP	RPM	BHP	RPM	BHP	RPM	BHP	RPM	BHP	RPM	BHP	RPM	BHP
6000	1141	1.95	1170	2.1	1198	2.25	1227	2.41	1255	2.57	1282	2.74	1308	2.9	1333	3.07	1358	3.24	1383	3.41
6400	1175	2.12	1203	2.28	1231	2.44	1257	2.6	1284	2.77	1311	2.94	1337	3.11	1362	3.29	1387	3.46	1411	3.64
7200	1245	2.49	1272	2.67	1299	2.85	1324	3.03	1349	3.21	1374	3.39	1397	3.57	1421	3.76	1445	3.95	1469	4.14
8000	1317	2.91	1343	3.11	1369	3.31	1394	3.5	1418	3.7	1442	3.9	1465	4.1	1487	4.31	1510	4.5	1532	4.7
8800	1392	3.38	1417	3.59	1442	3.81	1466	4.02	1489	4.24	1512	4.46	1534	4.68	1557	4.89	1578	5.11	1599	5.33
9600	1469	3.9	1493	4.13	1517	4.37	1539	4.6	1562	4.83	1584	5.07	1606	5.31	1627	5.54	1648	5.78	-	-

Notes:

1. Available External Static Pressure is the static pressure difference between the return duct and the supply duct plus the static pressure drop caused by accessories and options.
2. For direct drive evaporator fan speed (rpm), refer to the applicable table in the fan performance section.
3. Data includes pressure drop due to standard filters and wet coils. No accessories or options are included in pressure drop data.
4. To determine static pressure drop due to other options/accessories, refer to the applicable table in the fan performance section.
5. Direct drive fan motor heat is negligible.
6. Factory supplied motors, in commercial equipment, are definite purpose motors, specifically designed and tested to operate reliably and continuously at all cataloged conditions. Using the full horsepower range of our fan motors as shown in our tabular data will not result in nuisance tripping or premature motor failure. Our product's warranty will not be affected.

Table 106. Evaporator fan performance - 20 ton (model WSK, WHK), downflow, high static motor

Available External Static Pressure (Inches of Water Gauge)																				
	0.10		0.20		0.30		0.40		0.50		0.60		0.70		0.80		0.90		1.00	
CFM	RPM	BHP	RPM	BHP	RPM	BHP	RPM	BHP	RPM	BHP	RPM	BHP	RPM	BHP	RPM	BHP	RPM	BHP	RPM	BHP
6000	785	0.51	827	0.64	868	0.77	907	0.91	945	1.05	981	1.20	1016	1.35	1049	1.50	1081	1.65	1112	1.80
6400	831	0.61	872	0.74	911	0.88	948	1.02	984	1.17	1019	1.33	1053	1.48	1085	1.64	1116	1.80	1146	1.96
7200	925	0.83	962	0.97	997	1.13	1031	1.28	1064	1.45	1096	1.61	1128	1.79	1158	1.96	1188	2.14	1217	2.32
8000	1020	1.09	1054	1.26	1086	1.42	1117	1.60	1148	1.77	1177	1.95	1206	2.14	1235	2.33	1263	2.52	1290	2.72
8800	1115	1.42	1146	1.60	1176	1.78	1205	1.96	1233	2.15	1261	2.35	1288	2.55	1314	2.75	1341	2.96	1367	3.17
9600	1211	1.81	1240	2.00	1268	2.20	1295	2.39	1321	2.60	1347	2.81	1372	3.02	1397	3.24	1421	3.46	1445	3.68
Available External Static Pressure (Inches of Water Gauge)																				
	1.10		1.20		1.30		1.40		1.50		1.60		1.70		1.80		1.90		2.00	
CFM	RPM	BHP	RPM	BHP	RPM	BHP	RPM	BHP	RPM	BHP	RPM	BHP	RPM	BHP	RPM	BHP	RPM	BHP	RPM	BHP
6000	1141	1.95	1170	2.1	1198	2.25	1227	2.41	1255	2.57	1282	2.74	1308	2.9	1333	3.07	1358	3.24	1383	3.41
6400	1175	2.12	1203	2.28	1231	2.44	1257	2.6	1284	2.77	1311	2.94	1337	3.11	1362	3.29	1387	3.46	1411	3.64
7200	1245	2.49	1272	2.67	1299	2.85	1324	3.03	1349	3.21	1374	3.39	1397	3.57	1421	3.76	1445	3.95	1469	4.14
8000	1317	2.91	1343	3.11	1369	3.31	1394	3.5	1418	3.7	1442	3.9	1465	4.1	1487	4.31	1510	4.5	1532	4.7
8800	1392	3.38	1417	3.59	1442	3.81	1466	4.02	1489	4.24	1512	4.46	1534	4.68	1557	4.89	1578	5.11	1599	5.33

Table 106. Evaporator fan performance - 20 ton (model WSK, WHK), downflow, high static motor (continued)

Available External Static Pressure (Inches of Water Gauge)																				
	1.10		1.20		1.30		1.40		1.50		1.60		1.70		1.80		1.90		2.00	
CFM	RPM	BHP	RPM	BHP	RPM	BHP	RPM	BHP	RPM	BHP	RPM	BHP	RPM	BHP	RPM	BHP	RPM	BHP	RPM	BHP
9600	1469	3.9	1493	4.13	1517	4.37	1539	4.6	1562	4.83	1584	5.07	1606	5.31	1627	5.54	1648	5.78	1666	5.96

Notes:

1. Available External Static Pressure is the static pressure difference between the return duct and the supply duct plus the static pressure drop caused by accessories and options.
2. For direct drive evaporator fan speed (rpm), refer to the applicable table in the fan performance section.
3. Data includes pressure drop due to standard filters and wet coils. No accessories or options are included in pressure drop data.
4. To determine static pressure drop due to other options/accessories, refer to the applicable table in the fan performance section.
5. Direct drive fan motor heat is negligible.
6. Factory supplied motors, in commercial equipment, are definite purpose motors, specifically designed and tested to operate reliably and continuously at all cataloged conditions. Using the full horsepower range of our fan motors as shown in our tabular data will not result in nuisance tripping or premature motor failure. Our product's warranty will not be affected.

Table 107. Evaporator fan performance - 25 ton (model WSK, WHK), downflow

Available External Static Pressure (Inches of Water Gauge)																				
	0.10		0.20		0.30		0.40		0.50		0.60		0.70		0.80		0.90		1.00	
CFM	RPM	BHP	RPM	BHP	RPM	BHP	RPM	BHP	RPM	BHP	RPM	BHP	RPM	BHP	RPM	BHP	RPM	BHP	RPM	BHP
7500	961	0.92	996	1.07	1030	1.23	1063	1.40	1095	1.56	1126	1.74	1157	1.91	1187	2.09	1216	2.28	1244	2.46
8000	1020	1.09	1054	1.26	1086	1.42	1117	1.60	1148	1.77	1177	1.95	1206	2.14	1235	2.33	1263	2.52	1290	2.72
9000	1139	1.51	1170	1.69	1199	1.88	1227	2.06	1255	2.26	1282	2.46	1309	2.66	1335	2.87	1360	3.07	1386	3.29
10000	1259	2.02	1287	2.23	1314	2.43	1340	2.64	1365	2.84	1390	3.06	1415	3.28	1439	3.51	1463	3.73	1486	3.96
11000	1379	2.65	1405	2.87	1430	3.09	1454	3.32	1478	3.54	1501	3.77	1523	4.01	1546	4.25	1568	4.50	1590	4.75
12000	1500	3.39	1524	3.63	1547	3.87	1570	4.12	1592	4.37	1613	4.61	1634	4.86	1655	5.12	1676	5.39	1696	5.65
Available External Static Pressure (Inches of Water Gauge)																				
	1.10		1.20		1.30		1.40		1.50		1.60		1.70		1.80		1.90		2.00	
CFM	RPM	BHP	RPM	BHP	RPM	BHP	RPM	BHP	RPM	BHP	RPM	BHP	RPM	BHP	RPM	BHP	RPM	BHP	RPM	BHP
7500	1272	2.65	1299	2.83	1325	3.02	1350	3.2	1375	3.39	1399	3.58	1422	3.77	1446	3.96	1468	4.15	1491	4.34
8000	1317	2.91	1343	3.11	1369	3.31	1394	3.5	1418	3.7	1442	3.9	1465	4.1	1487	4.31	1510	4.5	1532	4.7
9000	1411	3.5	1436	3.72	1460	3.94	1484	4.16	1507	4.38	1530	4.61	1552	4.83	1574	5.05	1596	5.27	1617	5.5
10000	1509	4.19	1532	4.43	1555	4.67	1577	4.91	1599	5.15	1621	5.4	1643	5.64	-	-	-	-	-	-
11000	1611	4.99	1633	5.25	1653	5.5	1674	5.76	-	-	-	-	-	-	-	-	-	-	-	-
12000	-	-	-	-	-	-	-	-	-	-	-	-	-	-	-	-	-	-	-	-

Notes:

1. Available External Static Pressure is the static pressure difference between the return duct and the supply duct plus the static pressure drop caused by accessories and options.
2. For direct drive evaporator fan speed (rpm), refer to the applicable table in the fan performance section.
3. Data includes pressure drop due to standard filters and wet coils. No accessories or options are included in pressure drop data.
4. To determine static pressure drop due to other options/accessories, refer to the applicable table in the fan performance section.
5. Direct drive fan motor heat is negligible.
6. Factory supplied motors, in commercial equipment, are definite purpose motors, specifically designed and tested to operate reliably and continuously at all cataloged conditions. Using the full horsepower range of our fan motors as shown in our tabular data will not result in nuisance tripping or premature motor failure. Our product's warranty will not be affected.

Table 108. Evaporator fan performance - 25 ton (model WSK, WHK), downflow, high static motor

Available External Static Pressure (Inches of Water Gauge)																				
	0.10		0.20		0.30		0.40		0.50		0.60		0.70		0.80		0.90		1.00	
CFM	RPM	BHP	RPM	BHP	RPM	BHP	RPM	BHP	RPM	BHP	RPM	BHP	RPM	BHP	RPM	BHP	RPM	BHP	RPM	BHP
7500	961	0.92	996	1.07	1030	1.23	1063	1.40	1095	1.56	1126	1.74	1157	1.91	1187	2.09	1216	2.28	1244	2.46
8000	1020	1.09	1054	1.26	1086	1.42	1117	1.60	1148	1.77	1177	1.95	1206	2.14	1235	2.33	1263	2.52	1290	2.72
9000	1139	1.51	1170	1.69	1199	1.88	1227	2.06	1255	2.26	1282	2.46	1309	2.66	1335	2.87	1360	3.07	1386	3.29
10000	1259	2.02	1287	2.23	1314	2.43	1340	2.64	1365	2.84	1390	3.06	1415	3.28	1439	3.51	1463	3.73	1486	3.96
11000	1379	2.65	1405	2.87	1430	3.09	1454	3.32	1478	3.54	1501	3.77	1523	4.01	1546	4.25	1568	4.50	1590	4.75
12000	1500	3.39	1524	3.63	1547	3.87	1570	4.12	1592	4.37	1613	4.61	1634	4.86	1655	5.12	1676	5.39	1696	5.65

Table 108. Evaporator fan performance - 25 ton (model WSK, WHK), downflow, high static motor (continued)

	Available External Static Pressure (Inches of Water Gauge)																			
	1.10		1.20		1.30		1.40		1.50		1.60		1.70		1.80		1.90		2.00	
CFM	RPM	BHP	RPM	BHP	RPM	BHP	RPM	BHP	RPM	BHP	RPM	BHP	RPM	BHP	RPM	BHP	RPM	BHP	RPM	BHP
7500	1272	2.65	1299	2.83	1325	3.02	1350	3.2	1375	3.39	1399	3.58	1422	3.77	1446	3.96	1468	4.15	1491	4.34
8000	1317	2.91	1343	3.11	1369	3.31	1394	3.5	1418	3.7	1442	3.9	1465	4.1	1487	4.31	1510	4.5	1532	4.7
9000	1411	3.5	1436	3.72	1460	3.94	1484	4.16	1507	4.38	1530	4.61	1552	4.83	1574	5.05	1596	5.27	1617	5.5
10000	1509	4.19	1532	4.43	1555	4.67	1577	4.91	1599	5.15	1621	5.4	1643	5.64	1661	5.79	1682	6.04	1702	6.3
11000	1611	4.99	1633	5.25	1653	5.5	1674	5.76	1691	5.92	1712	6.19	1734	6.45	1748	6.53	1768	6.81	1787	7.1
12000	1713	5.79	1734	6.07	1751	6.33	1771	6.61	1783	6.69	1803	6.98	1825	7.26	1835	7.27	1854	7.58	1872	7.9

Notes:

1. Available External Static Pressure is the static pressure difference between the return duct and the supply duct plus the static pressure drop caused by accessories and options.
2. For direct drive evaporator fan speed (rpm), refer to the applicable table in the fan performance section.
3. Data includes pressure drop due to standard filters and wet coils. No accessories or options are included in pressure drop data.
4. To determine static pressure drop due to other options/accessories, refer to the applicable table in the fan performance section.
5. Direct drive fan motor heat is negligible.
6. Factory supplied motors, in commercial equipment, are definite purpose motors, specifically designed and tested to operate reliably and continuously at all cataloged conditions. Using the full horsepower range of our fan motors as shown in our tabular data will not result in nuisance tripping or premature motor failure. Our product's warranty will not be affected.

6 to 25 Tons — Horizontal

Figure 16. Fan curves – 6 to 8.5 tons (model WSK, WHK), 10 Ton (WSK), horizontal

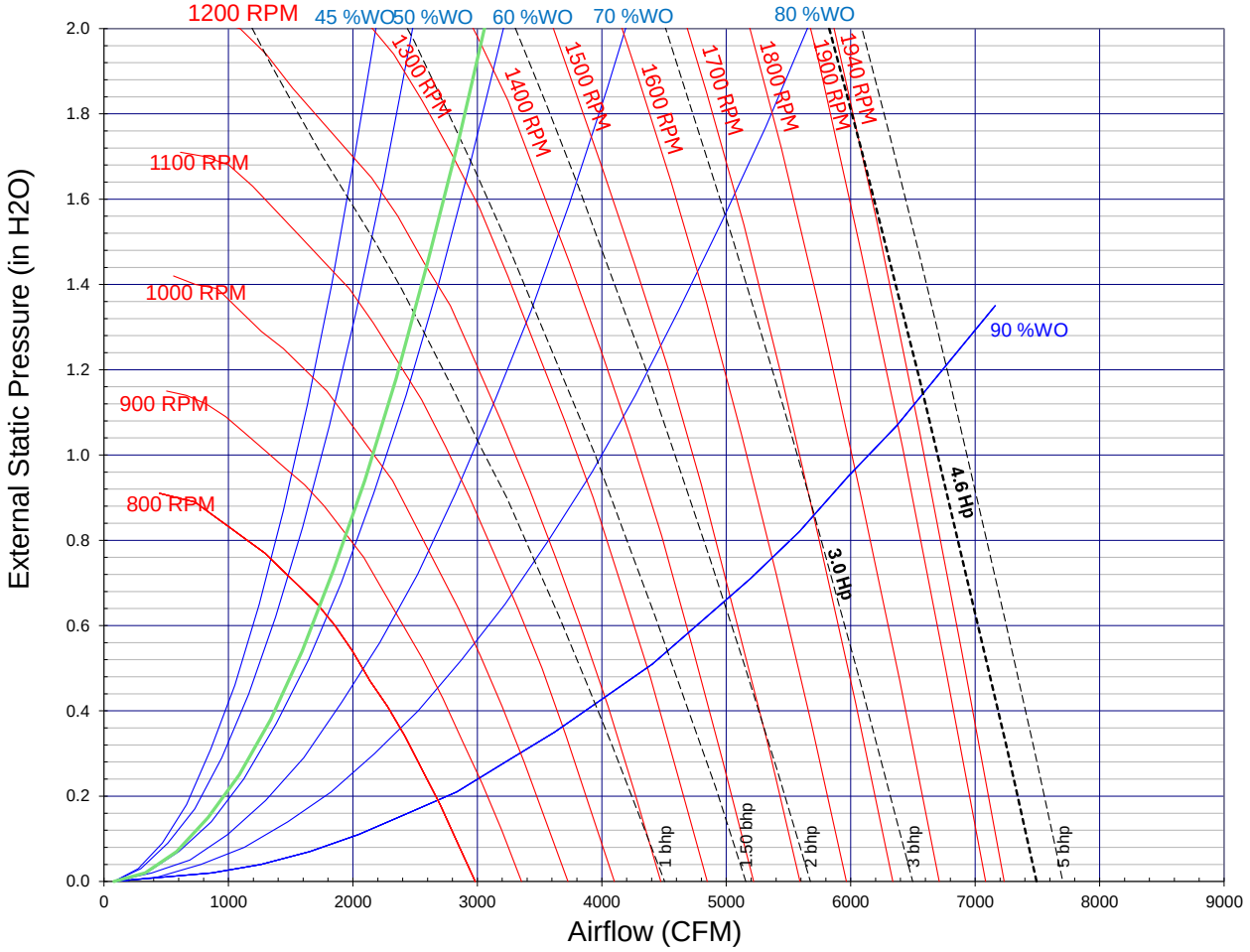

Table 109. Evaporator fan performance - 6 ton (model WSK, WHK), horizontal

Available External Static Pressure (Inches of Water Gauge)																				
	0.10		0.20		0.30		0.40		0.50		0.60		0.70		0.80		0.90		1.00	
CFM	RPM	BHP	RPM	BHP	RPM	BHP	RPM	BHP	RPM	BHP	RPM	BHP	RPM	BHP	RPM	BHP	RPM	BHP	RPM	BHP
1800	545	0.10	602	0.14	655	0.18	704	0.23	749	0.28	792	0.33	835	0.38	875	0.43	912	0.49	948	0.55
1920	574	0.12	627	0.16	679	0.20	727	0.25	771	0.30	811	0.35	852	0.41	892	0.46	929	0.52	965	0.58
2040	603	0.13	654	0.18	703	0.22	749	0.27	793	0.32	833	0.38	870	0.43	909	0.49	946	0.55	982	0.62
2160	632	0.15	681	0.20	728	0.25	772	0.30	815	0.35	855	0.41	892	0.46	927	0.52	964	0.59	999	0.65
2280	662	0.17	708	0.22	753	0.27	796	0.33	838	0.38	877	0.44	913	0.50	948	0.56	981	0.62	1016	0.69
2400	691	0.20	736	0.25	779	0.30	821	0.36	860	0.41	899	0.47	935	0.53	970	0.60	1002	0.66	1034	0.73
2520	721	0.22	764	0.28	806	0.33	846	0.39	884	0.45	922	0.51	958	0.57	992	0.64	1024	0.70	1055	0.77
2640	752	0.25	793	0.31	833	0.36	871	0.42	909	0.48	945	0.55	980	0.61	1014	0.68	1046	0.75	1076	0.82
2760	782	0.28	822	0.34	860	0.40	897	0.46	934	0.52	969	0.59	1003	0.65	1036	0.72	1068	0.79	1098	0.87
2880	813	0.32	851	0.37	888	0.43	924	0.50	959	0.56	993	0.63	1026	0.70	1059	0.77	1090	0.84	1120	0.92
Available External Static Pressure (Inches of Water Gauge)																				
	1.10		1.20		1.30		1.40		1.50		1.60		1.70		1.80		1.90		2.00	
CFM	RPM	BHP	RPM	BHP	RPM	BHP	RPM	BHP	RPM	BHP	RPM	BHP	RPM	BHP	RPM	BHP	RPM	BHP	RPM	BHP
1800	984	0.61	1019	0.67	1054	0.74	1087	0.8	1119	0.87	1150	0.94	1180	1.01	1209	1.08	1237	1.15	1265	1.23
1920	999	0.64	1031	0.71	1066	0.77	1099	0.84	1131	0.91	1161	0.98	1191	1.05	1220	1.12	1249	1.2	1276	1.27
2040	1016	0.68	1048	0.74	1079	0.81	1111	0.88	1142	0.95	1173	1.02	1203	1.1	1232	1.17	1261	1.25	1288	1.32
2160	1033	0.72	1065	0.78	1096	0.85	1126	0.92	1155	0.99	1185	1.07	1215	1.14	1244	1.22	1272	1.3	1300	1.38
2280	1050	0.76	1082	0.82	1113	0.89	1143	0.97	1171	1.04	1199	1.11	1227	1.19	1256	1.27	1284	1.35	1312	1.43
2400	1067	0.8	1099	0.87	1130	0.94	1160	1.01	1188	1.09	1216	1.16	1243	1.24	1270	1.32	1296	1.4	1324	1.48
2520	1085	0.84	1117	0.91	1147	0.99	1177	1.06	1205	1.14	1233	1.22	1260	1.3	1286	1.38	1312	1.46	1337	1.54
2640	1106	0.89	1134	0.96	1165	1.04	1194	1.11	1223	1.19	1250	1.27	1277	1.35	1303	1.44	1329	1.52	1354	1.6
2760	1127	0.94	1156	1.01	1183	1.09	1212	1.17	1240	1.25	1268	1.33	1294	1.41	1320	1.5	1346	1.58	1371	1.67
2880	1149	0.99	1177	1.07	1204	1.14	1230	1.22	1258	1.31	1285	1.39	1312	1.47	1338	1.56	1363	1.65	1388	1.74

Notes:

1. Available External Static Pressure is the static pressure difference between the return duct and the supply duct plus the static pressure drop caused by accessories and options.
2. For direct drive evaporator fan speed (rpm), refer to the applicable table in the fan performance section.
3. Data includes pressure drop due to standard filters and wet coils. No accessories or options are included in pressure drop data.
4. To determine static pressure drop due to other options/accessories, refer to the applicable table in the fan performance section.
5. Direct drive fan motor heat (MBh) = 2.7912 x fan bhp + 0.1388
6. Factory supplied motors, in commercial equipment, are definite purpose motors, specifically designed and tested to operate reliably and continuously at all cataloged conditions. Using the full horsepower range of our fan motors as shown in our tabular data will not result in nuisance tripping or premature motor failure. Our product's warranty will not be affected.

Table 110. Evaporator fan performance - 7.5 ton (model WSK, WHK), horizontal

Available External Static Pressure (Inches of Water Gauge)																				
	0.10		0.20		0.30		0.40		0.50		0.60		0.70		0.80		0.90		1.00	
CFM	RPM	BHP	RPM	BHP	RPM	BHP	RPM	BHP	RPM	BHP	RPM	BHP	RPM	BHP	RPM	BHP	RPM	BHP	RPM	BHP
2250	654	0.17	702	0.22	747	0.27	790	0.32	832	0.37	871	0.43	908	0.49	943	0.55	977	0.61	1012	0.68
2400	691	0.20	736	0.25	779	0.30	821	0.36	860	0.41	899	0.47	935	0.53	970	0.60	1002	0.66	1034	0.73
2550	729	0.23	772	0.28	813	0.34	852	0.40	891	0.45	927	0.52	963	0.58	997	0.65	1029	0.71	1060	0.78
2700	767	0.27	808	0.32	847	0.38	884	0.44	921	0.50	957	0.57	991	0.63	1025	0.70	1057	0.77	1087	0.84
2850	805	0.31	844	0.37	881	0.43	917	0.49	953	0.55	987	0.62	1020	0.69	1053	0.76	1084	0.83	1115	0.90
3000	843	0.35	880	0.41	916	0.48	951	0.54	984	0.61	1018	0.68	1050	0.75	1082	0.82	1113	0.89	1142	0.97
3150	882	0.40	917	0.46	951	0.53	985	0.60	1017	0.67	1049	0.74	1081	0.81	1111	0.89	1141	0.96	1170	1.04
3300	921	0.46	954	0.52	987	0.59	1019	0.66	1051	0.73	1081	0.80	1112	0.88	1142	0.96	1170	1.04	1199	1.12
3600	998	0.58	1029	0.65	1060	0.72	1090	0.80	1119	0.87	1148	0.95	1176	1.03	1204	1.12	1231	1.20	1258	1.28

Table 110. Evaporator fan performance - 7.5 ton (model WSK, WHK), horizontal (continued)

	Available External Static Pressure (Inches of Water Gauge)																			
	1.10		1.20		1.30		1.40		1.50		1.60		1.70		1.80		1.90		2.00	
CFM	RPM	BHP	RPM	BHP	RPM	BHP	RPM	BHP	RPM	BHP	RPM	BHP	RPM	BHP	RPM	BHP	RPM	BHP	RPM	BHP
2250	1045	0.75	1078	0.81	1109	0.88	1138	0.95	1167	1.03	1195	1.1	1224	1.18	1253	1.25	1281	1.33	1309	1.41
2400	1067	0.8	1099	0.87	1130	0.94	1160	1.01	1188	1.09	1216	1.16	1243	1.24	1270	1.32	1296	1.4	1324	1.48
2550	1090	0.85	1121	0.92	1152	1	1181	1.08	1210	1.15	1237	1.23	1264	1.31	1291	1.39	1316	1.47	1341	1.56
2700	1117	0.91	1145	0.99	1174	1.06	1203	1.14	1231	1.22	1259	1.3	1286	1.38	1312	1.47	1337	1.55	1362	1.64
2850	1144	0.98	1172	1.05	1199	1.13	1225	1.21	1253	1.29	1281	1.37	1307	1.46	1333	1.55	1359	1.63	1383	1.72
3000	1171	1.05	1199	1.13	1225	1.21	1251	1.29	1277	1.37	1303	1.45	1329	1.54	1355	1.63	1380	1.72	1405	1.81
3150	1199	1.12	1226	1.2	1253	1.28	1278	1.37	1303	1.45	1328	1.54	1351	1.62	1377	1.71	1402	1.81	1427	1.9
3300	1227	1.2	1254	1.28	1280	1.37	1306	1.45	1330	1.54	1354	1.63	1378	1.72	1401	1.81	1424	1.9	1448	1.99
3600	1284	1.37	1310	1.46	1336	1.55	1361	1.64	1385	1.73	1409	1.82	1432	1.92	1455	2.01	1477	2.11	1498	2.21

Notes:

1. Available External Static Pressure is the static pressure difference between the return duct and the supply duct plus the static pressure drop caused by accessories and options.
2. For direct drive evaporator fan speed (rpm), refer to the applicable table in the fan performance section.
3. Data includes pressure drop due to standard filters and wet coils. No accessories or options are included in pressure drop data.
4. To determine static pressure drop due to other options/accessories, refer to the applicable table in the fan performance section.
5. Direct drive fan motor heat (MBh) = 2.7912 x fan bhp + 0.1388
6. Factory supplied motors, in commercial equipment, are definite purpose motors, specifically designed and tested to operate reliably and continuously at all cataloged conditions. Using the full horsepower range of our fan motors as shown in our tabular data will not result in nuisance tripping or premature motor failure. Our product's warranty will not be affected.

Table 111. Evaporator fan performance - 8.5 ton (model WSK, WHK), horizontal

	Available External Static Pressure (Inches of Water Gauge)																			
	0.10		0.20		0.30		0.40		0.50		0.60		0.70		0.80		0.90		1.00	
CFM	RPM	BHP	RPM	BHP	RPM	BHP	RPM	BHP	RPM	BHP	RPM	BHP	RPM	BHP	RPM	BHP	RPM	BHP	RPM	BHP
2550	729	0.23	772	0.28	813	0.34	852	0.40	891	0.45	927	0.52	963	0.58	997	0.65	1029	0.71	1060	0.78
2720	772	0.27	812	0.33	851	0.39	888	0.45	925	0.51	961	0.57	995	0.64	1029	0.71	1060	0.78	1091	0.85
2890	815	0.32	854	0.38	890	0.44	926	0.50	961	0.57	995	0.63	1028	0.70	1061	0.77	1092	0.85	1122	0.92
3060	859	0.37	895	0.43	930	0.50	964	0.56	997	0.63	1031	0.70	1062	0.77	1093	0.84	1124	0.92	1154	1.00
3230	903	0.43	937	0.49	971	0.56	1003	0.63	1035	0.70	1066	0.77	1097	0.85	1127	0.92	1156	1.00	1186	1.08
3400	946	0.49	979	0.56	1012	0.63	1042	0.70	1073	0.78	1103	0.85	1133	0.93	1162	1.01	1190	1.09	1218	1.17
3570	991	0.57	1022	0.64	1053	0.71	1082	0.78	1112	0.86	1141	0.94	1169	1.02	1198	1.10	1225	1.18	1252	1.27
3740	1035	0.64	1065	0.72	1094	0.79	1123	0.87	1151	0.95	1179	1.03	1207	1.11	1233	1.20	1261	1.28	1287	1.37
4080	1123	0.82	1151	0.90	1178	0.98	1205	1.06	1231	1.15	1257	1.23	1283	1.32	1308	1.41	1333	1.50	1358	1.60
	Available External Static Pressure (Inches of Water Gauge)																			
	1.10		1.20		1.30		1.40		1.50		1.60		1.70		1.80		1.90		2.00	
CFM	RPM	BHP	RPM	BHP	RPM	BHP	RPM	BHP	RPM	BHP	RPM	BHP	RPM	BHP	RPM	BHP	RPM	BHP	RPM	BHP
2550	1090	0.85	1121	0.92	1152	1	1181	1.08	1210	1.15	1237	1.23	1264	1.31	1291	1.39	1316	1.47	1341	1.56
2720	1120	0.92	1148	0.99	1177	1.07	1206	1.15	1234	1.23	1262	1.31	1289	1.39	1315	1.48	1340	1.56	1365	1.65
2890	1151	1	1179	1.07	1206	1.15	1232	1.23	1259	1.31	1287	1.39	1313	1.48	1339	1.57	1364	1.65	1389	1.74
3060	1182	1.08	1210	1.16	1236	1.24	1262	1.32	1287	1.4	1312	1.48	1338	1.57	1364	1.66	1389	1.75	1413	1.84
3230	1214	1.16	1241	1.24	1267	1.33	1293	1.41	1318	1.5	1342	1.58	1366	1.67	1389	1.76	1414	1.85	1438	1.95
3400	1246	1.25	1273	1.34	1299	1.43	1324	1.51	1349	1.6	1373	1.69	1396	1.78	1419	1.87	1441	1.97	1463	2.06
3570	1278	1.35	1305	1.44	1330	1.53	1355	1.62	1380	1.71	1403	1.8	1427	1.9	1449	1.99	1471	2.09	1493	2.18
3740	1312	1.46	1337	1.55	1363	1.64	1387	1.73	1411	1.83	1435	1.92	1458	2.02	1480	2.12	1502	2.22	1523	2.31

Table 111. Evaporator fan performance - 8.5 ton (model WSK, WHK), horizontal (continued)

Available External Static Pressure (Inches of Water Gauge)																				
	1.10		1.20		1.30		1.40		1.50		1.60		1.70		1.80		1.90		2.00	
CFM	RPM	BHP	RPM	BHP	RPM	BHP	RPM	BHP	RPM	BHP	RPM	BHP	RPM	BHP	RPM	BHP	RPM	BHP	RPM	BHP
4080	1382	1.69	1406	1.79	1430	1.88	1452	1.98	1476	2.08	1499	2.18	1521	2.28	1543	2.39	1564	2.49	1585	2.6

Notes:

1. Available External Static Pressure is the static pressure difference between the return duct and the supply duct plus the static pressure drop caused by accessories and options.
2. For direct drive evaporator fan speed (rpm), refer to the applicable table in the fan performance section.
3. Data includes pressure drop due to standard filters and wet coils. No accessories or options are included in pressure drop data.
4. To determine static pressure drop due to other options/accessories, refer to the applicable table in the fan performance section.
5. Direct drive fan motor heat (MBh) = 2.7912 x fan bhp + 0.1388
6. Factory supplied motors, in commercial equipment, are definite purpose motors, specifically designed and tested to operate reliably and continuously at all cataloged conditions. Using the full horsepower range of our fan motors as shown in our tabular data will not result in nuisance tripping or premature motor failure. Our product's warranty will not be affected.

Table 112. Evaporator fan performance - 10 ton (model WSK), horizontal

Available External Static Pressure (Inches of Water Gauge)																				
	0.10		0.20		0.30		0.40		0.50		0.60		0.70		0.80		0.90		1.00	
CFM	RPM	BHP	RPM	BHP	RPM	BHP	RPM	BHP	RPM	BHP	RPM	BHP	RPM	BHP	RPM	BHP	RPM	BHP	RPM	BHP
3000	843	0.35	880	0.41	916	0.48	951	0.54	984	0.61	1018	0.68	1050	0.75	1082	0.82	1113	0.89	1142	0.97
3200	895	0.42	930	0.48	963	0.55	996	0.62	1029	0.69	1060	0.76	1091	0.83	1121	0.91	1151	0.99	1180	1.07
3400	946	0.49	979	0.56	1012	0.63	1042	0.70	1073	0.78	1103	0.85	1133	0.93	1162	1.01	1190	1.09	1218	1.17
3600	998	0.58	1029	0.65	1060	0.72	1090	0.80	1119	0.87	1148	0.95	1176	1.03	1204	1.12	1231	1.20	1258	1.28
3800	1050	0.67	1080	0.75	1109	0.82	1138	0.90	1165	0.98	1193	1.06	1220	1.15	1246	1.23	1273	1.32	1299	1.41
4000	1103	0.78	1131	0.85	1159	0.93	1186	1.02	1212	1.10	1239	1.18	1265	1.27	1290	1.36	1315	1.45	1341	1.54
4200	1155	0.89	1182	0.97	1208	1.05	1235	1.14	1260	1.23	1285	1.31	1310	1.41	1335	1.50	1359	1.59	1383	1.69
4400	1207	1.02	1233	1.10	1258	1.19	1284	1.28	1308	1.37	1332	1.46	1356	1.55	1380	1.65	1404	1.74	1427	1.84
4600	1260	1.15	1285	1.24	1309	1.33	1333	1.42	1357	1.52	1380	1.61	1403	1.71	1426	1.81	1449	1.91	1471	2.01
4800	1312	1.30	1336	1.39	1360	1.49	1383	1.58	1406	1.68	1429	1.78	1450	1.88	1472	1.98	1494	2.08	1516	2.19
Available External Static Pressure (Inches of Water Gauge)																				
	1.10		1.20		1.30		1.40		1.50		1.60		1.70		1.80		1.90		2.00	
CFM	RPM	BHP	RPM	BHP	RPM	BHP	RPM	BHP	RPM	BHP	RPM	BHP	RPM	BHP	RPM	BHP	RPM	BHP	RPM	BHP
3000	1171	1.05	1199	1.13	1225	1.21	1251	1.29	1277	1.37	1303	1.45	1329	1.54	1355	1.63	1380	1.72	1405	1.81
3200	1208	1.15	1235	1.23	1262	1.31	1287	1.4	1312	1.48	1337	1.57	1360	1.65	1384	1.74	1409	1.84	1434	1.93
3400	1246	1.25	1273	1.34	1299	1.43	1324	1.51	1349	1.6	1373	1.69	1396	1.78	1419	1.87	1441	1.97	1463	2.06
3600	1284	1.37	1310	1.46	1336	1.55	1361	1.64	1385	1.73	1409	1.82	1432	1.92	1455	2.01	1477	2.11	1498	2.21
3800	1325	1.5	1349	1.59	1374	1.68	1399	1.77	1423	1.87	1446	1.97	1469	2.06	1491	2.16	1513	2.26	1534	2.36
4000	1366	1.63	1390	1.73	1413	1.82	1437	1.92	1460	2.02	1483	2.12	1506	2.22	1528	2.32	1550	2.42	1571	2.53
4200	1407	1.78	1431	1.88	1454	1.98	1477	2.08	1499	2.18	1521	2.28	1544	2.38	1565	2.49	1587	2.6	1608	2.7
4400	1449	1.94	1473	2.04	1495	2.14	1517	2.25	1539	2.35	1560	2.45	1582	2.56	1603	2.67	1624	2.78	1645	2.89
4600	1493	2.11	1515	2.21	1537	2.32	1559	2.43	1580	2.53	1601	2.64	1621	2.75	1641	2.86	-	-	-	-
4800	1538	2.29	1558	2.4	1579	2.51	1600	2.62	1621	2.73	1642	2.84	-	-	-	-	-	-	-	-

Notes:

1. Available External Static Pressure is the static pressure difference between the return duct and the supply duct plus the static pressure drop caused by accessories and options.
2. For direct drive evaporator fan speed (rpm), refer to the applicable table in the fan performance section.
3. Data includes pressure drop due to standard filters and wet coils. No accessories or options are included in pressure drop data.
4. To determine static pressure drop due to other options/accessories, refer to the applicable table in the fan performance section.
5. Direct drive fan motor heat (MBh) = 2.7912 x fan bhp + 0.1388
6. Factory supplied motors, in commercial equipment, are definite purpose motors, specifically designed and tested to operate reliably and continuously at all cataloged conditions. Using the full horsepower range of our fan motors as shown in our tabular data will not result in nuisance tripping or premature motor failure. Our product's warranty will not be affected.

Figure 17. Fan curves - 10 ton (model WHK), horizontal

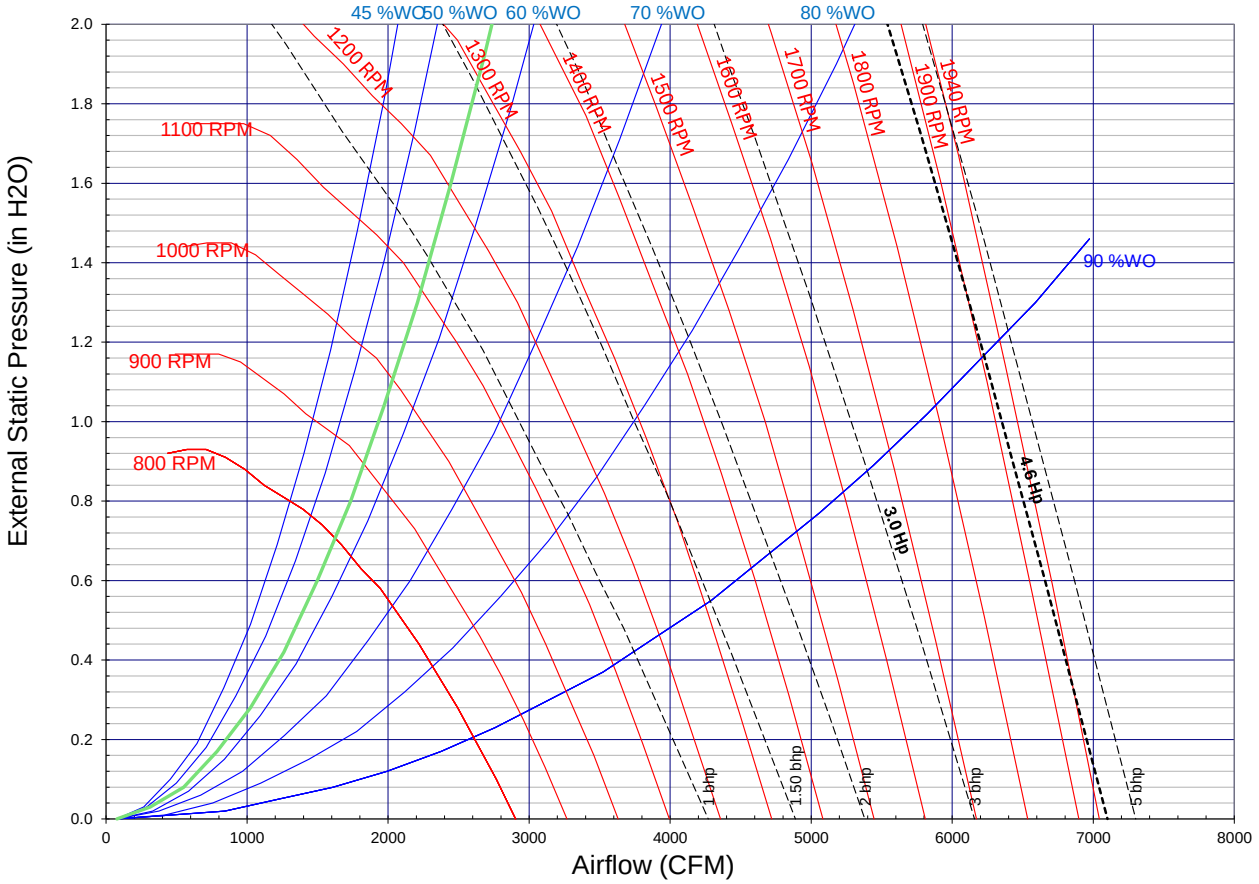

Table 113. Evaporator fan performance – 10 ton (model WSK), horizontal, high static

Available External Static Pressure (Inches of Water Gauge)																				
	0.10		0.20		0.30		0.40		0.50		0.60		0.70		0.80		0.90		1.00	
CFM	RPM	BHP	RPM	BHP	RPM	BHP	RPM	BHP	RPM	BHP	RPM	BHP	RPM	BHP	RPM	BHP	RPM	BHP	RPM	BHP
3000	797	0.29	843	0.36	887	0.44	928	0.51	968	0.59	1007	0.67	1044	0.76	1082	0.85	1117	0.94	1151	1.03
3200	844	0.34	888	0.42	929	0.49	969	0.58	1007	0.66	1044	0.74	1080	0.83	1115	0.93	1150	1.02	1184	1.12
3400	891	0.40	932	0.48	973	0.56	1011	0.65	1047	0.73	1083	0.82	1117	0.91	1151	1.01	1184	1.11	1217	1.21
3600	938	0.46	978	0.55	1016	0.63	1053	0.72	1088	0.81	1122	0.91	1155	1.00	1188	1.10	1219	1.20	1251	1.30
3800	986	0.53	1024	0.62	1061	0.71	1096	0.81	1130	0.90	1163	1.00	1194	1.10	1226	1.20	1257	1.30	1286	1.41
4000	1033	0.61	1070	0.71	1105	0.80	1139	0.90	1172	1.00	1204	1.10	1235	1.20	1264	1.30	1294	1.41	1324	1.52
4200	1081	0.70	1117	0.80	1150	0.90	1183	1.00	1215	1.10	1245	1.21	1275	1.31	1304	1.42	1333	1.53	1361	1.64
4400	1129	0.80	1163	0.90	1196	1.00	1227	1.10	1258	1.21	1287	1.32	1317	1.43	1345	1.54	1372	1.66	1400	1.77
4600	1178	0.90	1210	1.01	1242	1.11	1272	1.22	1302	1.33	1330	1.45	1358	1.56	1386	1.68	1413	1.80	1439	1.91
4800	1226	1.01	1258	1.12	1288	1.23	1317	1.35	1346	1.46	1374	1.58	1401	1.70	1428	1.82	1454	1.94	1480	2.06
Available External Static Pressure (Inches of Water Gauge)																				
	1.10		1.20		1.30		1.40		1.50		1.60		1.70		1.80		1.90		2.00	
CFM	RPM	BHP	RPM	BHP	RPM	BHP	RPM	BHP	RPM	BHP	RPM	BHP	RPM	BHP	RPM	BHP	RPM	BHP	RPM	BHP
3000	1184	1.13	1215	1.22	1246	1.32	1278	1.42	1308	1.53	1338	1.64	1366	1.74	1394	1.85	1421	1.96	1448	2.08
3200	1216	1.21	1247	1.31	1277	1.42	1306	1.52	1336	1.63	1365	1.74	1393	1.85	1421	1.96	1448	2.08	1475	2.19
3400	1249	1.31	1280	1.41	1309	1.52	1338	1.63	1366	1.73	1393	1.84	1421	1.96	1449	2.08	1475	2.19	1502	2.31
3600	1282	1.41	1313	1.52	1342	1.63	1370	1.74	1398	1.85	1425	1.96	1451	2.08	1476	2.2	1503	2.32	1529	2.44
3800	1316	1.52	1346	1.63	1375	1.74	1403	1.86	1430	1.97	1457	2.09	1483	2.21	1508	2.33	1533	2.45	1557	2.58
4000	1352	1.63	1380	1.75	1408	1.87	1436	1.98	1463	2.11	1490	2.23	1515	2.35	1540	2.47	1565	2.6	1589	2.73

Table 113. Evaporator fan performance – 10 ton (model WSK), horizontal, high static (continued)

	Available External Static Pressure (Inches of Water Gauge)																			
	1.10		1.20		1.30		1.40		1.50		1.60		1.70		1.80		1.90		2.00	
CFM	RPM	BHP	RPM	BHP	RPM	BHP	RPM	BHP	RPM	BHP	RPM	BHP	RPM	BHP	RPM	BHP	RPM	BHP	RPM	BHP
4200	1389	1.76	1416	1.88	1442	2	1470	2.12	1497	2.24	1523	2.37	1548	2.5	1573	2.62	1597	2.75	1621	2.88
4400	1427	1.89	1453	2.01	1479	2.14	1504	2.26	1530	2.39	1556	2.52	1581	2.65	1606	2.78	1630	2.92	1654	3.05
4600	1465	2.04	1491	2.16	1516	2.29	1541	2.42	1565	2.54	1590	2.68	1615	2.81	1639	2.95	1663	3.09	1687	3.22
4800	1504	2.19	1529	2.32	1554	2.45	1579	2.58	1602	2.71	1626	2.85	1649	2.98	1673	3.12	1697	3.26	1720	3.41

Notes:

1. Available External Static Pressure is the static pressure difference between the return duct and the supply duct plus the static pressure drop caused by accessories and options.
2. For direct drive evaporator fan speed (rpm), refer to the applicable table in the fan performance section.
3. Data includes pressure drop due to standard filters and wet coils. No accessories or options are included in pressure drop data.
4. To determine static pressure drop due to other options/accessories, refer to the applicable table in the fan performance section.
5. Direct drive fan motor heat is negligible.
6. Factory supplied motors, in commercial equipment, are definite purpose motors, specifically designed and tested to operate reliably and continuously at all cataloged conditions. Using the full horsepower range of our fan motors as shown in our tabular data will not result in nuisance tripping or premature motor failure. Our product's warranty will not be affected.

Table 114. Evaporator fan performance - 10 ton (model WHK), horizontal

	Available External Static Pressure (Inches of Water Gauge)																			
	0.10		0.20		0.30		0.40		0.50		0.60		0.70		0.80		0.90		1.00	
CFM	RPM	BHP	RPM	BHP	RPM	BHP	RPM	BHP	RPM	BHP	RPM	BHP	RPM	BHP	RPM	BHP	RPM	BHP	RPM	BHP
3000	860	0.41	893	0.47	926	0.53	958	0.60	990	0.67	1020	0.74	1050	0.81	1080	0.88	1109	0.96	1137	1.03
3200	913	0.48	944	0.55	976	0.62	1005	0.69	1035	0.76	1064	0.83	1093	0.91	1121	0.98	1149	1.06	1176	1.14
3400	967	0.57	996	0.64	1025	0.71	1054	0.79	1081	0.86	1110	0.94	1137	1.02	1163	1.09	1190	1.18	1217	1.26
3600	1020	0.67	1048	0.74	1075	0.82	1103	0.89	1129	0.97	1156	1.05	1182	1.13	1208	1.22	1233	1.30	1258	1.39
3800	1073	0.78	1100	0.86	1126	0.93	1152	1.01	1178	1.10	1203	1.18	1228	1.26	1253	1.35	1277	1.44	1300	1.53
4000	1127	0.90	1153	0.98	1177	1.06	1202	1.15	1227	1.23	1251	1.32	1274	1.41	1298	1.50	1322	1.59	1345	1.68
4200	1181	1.03	1205	1.12	1229	1.20	1253	1.29	1276	1.38	1300	1.47	1322	1.56	1344	1.65	1367	1.75	1390	1.85
4400	1235	1.18	1258	1.27	1281	1.36	1303	1.45	1326	1.54	1349	1.64	1370	1.73	1392	1.83	1413	1.92	1435	2.02
4600	1289	1.34	1311	1.43	1333	1.52	1354	1.62	1376	1.72	1398	1.81	1419	1.91	1440	2.01	1460	2.11	1481	2.22
4800	1343	1.51	1365	1.61	1386	1.71	1406	1.80	1427	1.90	1448	2.01	1468	2.11	1488	2.21	1508	2.32	1527	2.42
	Available External Static Pressure (Inches of Water Gauge)																			
	1.10		1.20		1.30		1.40		1.50		1.60		1.70		1.80		1.90		2.00	
CFM	RPM	BHP	RPM	BHP	RPM	BHP	RPM	BHP	RPM	BHP	RPM	BHP	RPM	BHP	RPM	BHP	RPM	BHP	RPM	BHP
3000	1163	1.11	1189	1.18	1214	1.26	1238	1.34	1264	1.42	1290	1.51	1314	1.59	1339	1.68	1362	1.77	1385	1.86
3200	1203	1.22	1228	1.3	1253	1.38	1276	1.47	1300	1.55	1322	1.63	1347	1.72	1371	1.81	1394	1.9	1417	2
3400	1243	1.34	1268	1.43	1292	1.51	1315	1.6	1338	1.69	1361	1.77	1382	1.86	1404	1.95	1426	2.05	1449	2.14
3600	1283	1.48	1308	1.56	1332	1.65	1355	1.74	1377	1.84	1399	1.93	1421	2.02	1442	2.11	1463	2.21	1483	2.3
3800	1324	1.62	1348	1.71	1372	1.81	1395	1.9	1417	1.99	1439	2.09	1460	2.19	1481	2.28	1501	2.38	1521	2.48
4000	1367	1.78	1390	1.87	1413	1.97	1435	2.07	1457	2.16	1478	2.26	1499	2.36	1520	2.46	1540	2.57	1560	2.67
4200	1412	1.94	1433	2.04	1454	2.14	1476	2.24	1498	2.35	1519	2.45	1539	2.55	1560	2.66	1579	2.76	1599	2.87
4400	1456	2.13	1477	2.23	1498	2.33	1518	2.44	1539	2.54	1560	2.65	1580	2.76	1600	2.86	1619	2.97	1639	3.08
4600	1502	2.32	1522	2.43	1542	2.53	1562	2.64	1581	2.75	1601	2.86	1621	2.97	1640	3.08	1660	3.2	1679	3.31
4800	1548	2.53	1568	2.64	1587	2.75	1606	2.86	1625	2.97	1643	3.09	1662	3.2	1682	3.32	1701	3.43	1719	3.55

Notes:

1. Available External Static Pressure is the static pressure difference between the return duct and the supply duct plus the static pressure drop caused by accessories and options.
2. For direct drive evaporator fan speed (rpm), refer to the applicable table in the fan performance section.
3. Data includes pressure drop due to standard filters and wet coils. No accessories or options are included in pressure drop data.
4. To determine static pressure drop due to other options/accessories, refer to the applicable table in the fan performance section.
5. Direct drive fan motor heat (MBh) = 2.7912 x fan bhp + 0.1388
6. Factory supplied motors, in commercial equipment, are definite purpose motors, specifically designed and tested to operate reliably and continuously at all cataloged conditions. Using the full horsepower range of our fan motors as shown in our tabular data will not result in nuisance tripping or premature motor failure. Our product's warranty will not be affected.

Figure 18. Fan curves — 12.5 to 25 tons (model WSK, WHK), horizontal

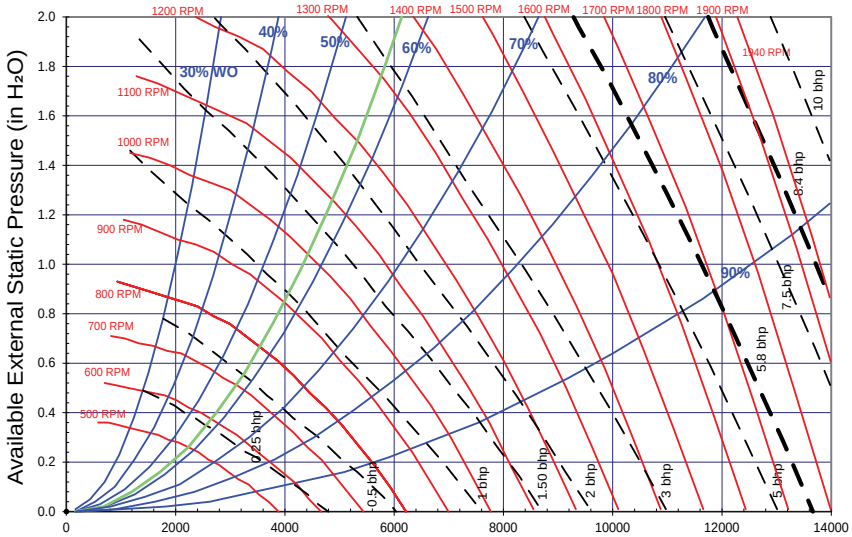

Table 115. Evaporator fan performance - 12.5 ton (model WSK, WHK), horizontal

Available External Static Pressure (Inches of Water Gauge)																				
	0.10		0.20		0.30		0.40		0.50		0.60		0.70		0.80		0.90		1.00	
CFM	RPM	BHP	RPM	BHP	RPM	BHP	RPM	BHP	RPM	BHP	RPM	BHP	RPM	BHP	RPM	BHP	RPM	BHP	RPM	BHP
3750	562	0.22	618	0.30	672	0.39	723	0.49	771	0.59	815	0.70	858	0.81	898	0.93	936	1.04	972	1.16
4000	592	0.25	646	0.34	696	0.44	745	0.54	792	0.65	835	0.76	877	0.87	916	0.99	954	1.11	990	1.24
4500	653	0.33	701	0.43	748	0.54	792	0.64	835	0.76	877	0.88	917	1.00	955	1.13	991	1.26	1027	1.39
5000	716	0.43	759	0.54	802	0.65	843	0.77	882	0.89	922	1.02	959	1.15	996	1.29	1031	1.43	1065	1.57
5500	779	0.55	819	0.67	858	0.79	896	0.92	933	1.04	969	1.17	1005	1.32	1039	1.46	1073	1.61	1106	1.76
6000	842	0.69	879	0.82	915	0.95	951	1.08	985	1.22	1020	1.36	1052	1.50	1085	1.66	1117	1.82	1149	1.98
Available External Static Pressure (Inches of Water Gauge)																				
	1.10		1.20		1.30		1.40		1.50		1.60		1.70		1.80		1.90		2.00	
CFM	RPM	BHP	RPM	BHP	RPM	BHP	RPM	BHP	RPM	BHP	RPM	BHP	RPM	BHP	RPM	BHP	RPM	BHP	RPM	BHP
3750	1007	1.29	1042	1.42	1075	1.55	1107	1.69	1138	1.83	1168	1.97	1197	2.11	1225	2.26	1253	2.41	1280	2.56
4000	1024	1.36	1057	1.49	1090	1.63	1122	1.77	1153	1.91	1183	2.06	1212	2.21	1240	2.36	1268	2.51	1294	2.66
4500	1060	1.53	1093	1.67	1124	1.81	1155	1.95	1184	2.1	1213	2.25	1242	2.41	1270	2.56	1298	2.73	1324	2.89
5000	1098	1.71	1130	1.86	1161	2.01	1191	2.16	1220	2.32	1248	2.47	1275	2.63	1302	2.79	1328	2.96	1355	3.13
5500	1138	1.91	1169	2.07	1199	2.23	1228	2.39	1256	2.55	1284	2.72	1311	2.89	1338	3.06	1364	3.23	1389	3.4
6000	1180	2.14	1210	2.3	1239	2.47	1267	2.64	1295	2.81	1322	2.99	1348	3.16	1375	3.34	1400	3.52	1425	3.7

Notes:

1. Available External Static Pressure is the static pressure difference between the return duct and the supply duct plus the static pressure drop caused by accessories and options.
2. For direct drive evaporator fan speed (rpm), refer to the applicable table in the fan performance section.
3. Data includes pressure drop due to standard filters and wet coils. No accessories or options are included in pressure drop data.
4. To determine static pressure drop due to other options/accessories, refer to the applicable table in the fan performance section.
5. Direct drive fan motor heat is negligible.
6. Factory supplied motors, in commercial equipment, are definite purpose motors, specifically designed and tested to operate reliably and continuously at all cataloged conditions. Using the full horsepower range of our fan motors as shown in our tabular data will not result in nuisance tripping or premature motor failure. Our product's warranty will not be affected.

Table 116. Evaporator fan performance - 15 ton (model WSK, WHK), horizontal

Available External Static Pressure (Inches of Water Gauge)																				
	0.10		0.20		0.30		0.40		0.50		0.60		0.70		0.80		0.90		1.00	
CFM	RPM	BHP	RPM	BHP	RPM	BHP	RPM	BHP	RPM	BHP	RPM	BHP	RPM	BHP	RPM	BHP	RPM	BHP	RPM	BHP
4500	653	0.33	701	0.43	748	0.54	792	0.64	835	0.76	877	0.88	917	1.00	955	1.13	991	1.26	1027	1.39
4800	690	0.39	736	0.49	780	0.60	822	0.72	863	0.83	903	0.96	942	1.09	979	1.22	1015	1.36	1049	1.50

Table 116. Evaporator fan performance - 15 ton (model WSK, WHK), horizontal (continued)

Available External Static Pressure (Inches of Water Gauge)																				
	0.10		0.20		0.30		0.40		0.50		0.60		0.70		0.80		0.90		1.00	
CFM	RPM	BHP	RPM	BHP	RPM	BHP	RPM	BHP	RPM	BHP	RPM	BHP	RPM	BHP	RPM	BHP	RPM	BHP	RPM	BHP
5400	766	0.53	807	0.64	846	0.76	885	0.88	923	1.01	959	1.14	995	1.28	1030	1.43	1065	1.57	1098	1.72
6000	842	0.69	879	0.82	915	0.95	951	1.08	985	1.22	1020	1.36	1052	1.50	1085	1.66	1117	1.82	1149	1.98
6600	919	0.90	953	1.03	986	1.17	1019	1.32	1051	1.47	1082	1.62	1114	1.77	1144	1.93	1173	2.09	1203	2.26
7200	997	1.13	1028	1.28	1058	1.43	1089	1.59	1118	1.75	1148	1.91	1177	2.08	1205	2.25	1233	2.42	1261	2.59
Available External Static Pressure (Inches of Water Gauge)																				
	1.10		1.20		1.30		1.40		1.50		1.60		1.70		1.80		1.90		2.00	
CFM	RPM	BHP	RPM	BHP	RPM	BHP	RPM	BHP	RPM	BHP	RPM	BHP	RPM	BHP	RPM	BHP	RPM	BHP	RPM	BHP
4500	1060	1.53	1093	1.67	1124	1.81	1155	1.95	1184	2.1	1213	2.25	1242	2.41	1270	2.56	1298	2.73	1324	2.89
4800	1083	1.64	1115	1.78	1146	1.93	1176	2.07	1205	2.23	1234	2.38	1261	2.53	1289	2.7	1316	2.86	1342	3.03
5400	1130	1.87	1161	2.03	1191	2.18	1220	2.34	1249	2.5	1277	2.67	1304	2.83	1331	3	1356	3.17	1382	3.34
6000	1180	2.14	1210	2.3	1239	2.47	1267	2.64	1295	2.81	1322	2.99	1348	3.16	1375	3.34	1400	3.52	1425	3.7
6600	1232	2.44	1261	2.61	1289	2.79	1317	2.97	1343	3.15	1370	3.34	1396	3.53	1421	3.71	1445	3.9	1469	4.1
7200	1288	2.77	1315	2.96	1342	3.15	1368	3.34	1394	3.53	1420	3.73	1445	3.92	1469	4.12	1493	4.33	1517	4.53

Notes:

1. Available External Static Pressure is the static pressure difference between the return duct and the supply duct plus the static pressure drop caused by accessories and options.
2. For direct drive evaporator fan speed (rpm), refer to the applicable table in the fan performance section.
3. Data includes pressure drop due to standard filters and wet coils. No accessories or options are included in pressure drop data.
4. To determine static pressure drop due to other options/accessories, refer to the applicable table in the fan performance section.
5. Direct drive fan motor heat is negligible.
6. Factory supplied motors, in commercial equipment, are definite purpose motors, specifically designed and tested to operate reliably and continuously at all cataloged conditions. Using the full horsepower range of our fan motors as shown in our tabular data will not result in nuisance tripping or premature motor failure. Our product's warranty will not be affected.

Table 117. Evaporator fan performance - 17.5 ton (model WSK, WHK), horizontal

Available External Static Pressure (Inches of Water Gauge)																				
	0.10		0.20		0.30		0.40		0.50		0.60		0.70		0.80		0.90		1.00	
CFM	RPM	BHP	RPM	BHP	RPM	BHP	RPM	BHP	RPM	BHP	RPM	BHP	RPM	BHP	RPM	BHP	RPM	BHP	RPM	BHP
5250	747	0.49	789	0.60	830	0.72	869	0.84	907	0.96	945	1.09	981	1.23	1018	1.37	1052	1.52	1086	1.66
5600	791	0.58	831	0.70	869	0.82	907	0.95	943	1.08	979	1.21	1014	1.35	1048	1.50	1082	1.65	1115	1.80
6300	881	0.79	916	0.92	951	1.06	984	1.20	1018	1.34	1051	1.49	1083	1.63	1114	1.79	1145	1.95	1175	2.12
7000	971	1.05	1003	1.19	1034	1.34	1065	1.50	1096	1.65	1126	1.81	1155	1.97	1185	2.14	1213	2.30	1241	2.47
7700	1061	1.36	1091	1.52	1120	1.68	1148	1.85	1176	2.02	1204	2.19	1232	2.36	1258	2.54	1285	2.72	1312	2.90
8400	1153	1.74	1180	1.91	1207	2.08	1232	2.26	1259	2.44	1285	2.63	1310	2.82	1335	3.01	1360	3.20	1384	3.39
Available External Static Pressure (Inches of Water Gauge)																				
	1.10		1.20		1.30		1.40		1.50		1.60		1.70		1.80		1.90		2.00	
CFM	RPM	BHP	RPM	BHP	RPM	BHP	RPM	BHP	RPM	BHP	RPM	BHP	RPM	BHP	RPM	BHP	RPM	BHP	RPM	BHP
5250	1118	1.81	1149	1.96	1179	2.12	1209	2.27	1238	2.43	1266	2.59	1293	2.76	1320	2.92	1346	3.09	1371	3.26
5600	1146	1.96	1177	2.12	1207	2.28	1235	2.44	1264	2.6	1292	2.77	1319	2.94	1345	3.11	1371	3.28	1396	3.46
6300	1206	2.28	1235	2.45	1264	2.63	1292	2.8	1319	2.98	1346	3.16	1372	3.34	1397	3.52	1422	3.71	1447	3.9
7000	1269	2.65	1297	2.84	1324	3.02	1351	3.21	1377	3.4	1403	3.59	1428	3.79	1453	3.98	1477	4.18	1501	4.38
7700	1337	3.08	1362	3.27	1388	3.47	1414	3.67	1438	3.87	1463	4.08	1487	4.29	1511	4.5	1535	4.71	1558	4.92
8400	1409	3.59	1433	3.79	1457	3.98	1480	4.19	1504	4.4	1527	4.62	1550	4.84	1572	5.06	1595	5.29	1617	5.51

Notes:

1. Available External Static Pressure is the static pressure difference between the return duct and the supply duct plus the static pressure drop caused by accessories and options.
2. For direct drive evaporator fan speed (rpm), refer to the applicable table in the fan performance section.
3. Data includes pressure drop due to standard filters and wet coils. No accessories or options are included in pressure drop data.
4. To determine static pressure drop due to other options/accessories, refer to the applicable table in the fan performance section.
5. Direct drive fan motor heat is negligible.
6. Factory supplied motors, in commercial equipment, are definite purpose motors, specifically designed and tested to operate reliably and continuously at all cataloged conditions. Using the full horsepower range of our fan motors as shown in our tabular data will not result in nuisance tripping or premature motor failure. Our product's warranty will not be affected.

Evaporator Fan Performance — Heat Pump

Table 118. Evaporator fan performance - 17.5 ton (model WSK, WHK), horizontal, high static motor

Available External Static Pressure (Inches of Water Gauge)																				
	0.10		0.20		0.30		0.40		0.50		0.60		0.70		0.80		0.90		1.00	
CFM	RPM	BHP	RPM	BHP	RPM	BHP	RPM	BHP	RPM	BHP	RPM	BHP	RPM	BHP	RPM	BHP	RPM	BHP	RPM	BHP
5250	747	0.49	789	0.60	830	0.72	869	0.84	907	0.96	945	1.09	981	1.23	1018	1.37	1052	1.52	1086	1.66
5600	791	0.58	831	0.70	869	0.82	907	0.95	943	1.08	979	1.21	1014	1.35	1048	1.50	1082	1.65	1115	1.80
6300	881	0.79	916	0.92	951	1.06	984	1.20	1018	1.34	1051	1.49	1083	1.63	1114	1.79	1145	1.95	1175	2.12
7000	971	1.05	1003	1.19	1034	1.34	1065	1.50	1096	1.65	1126	1.81	1155	1.97	1185	2.14	1213	2.30	1241	2.47
7700	1061	1.36	1091	1.52	1120	1.68	1148	1.85	1176	2.02	1204	2.19	1232	2.36	1258	2.54	1285	2.72	1312	2.90
8400	1153	1.74	1180	1.91	1207	2.08	1232	2.26	1259	2.44	1285	2.63	1310	2.82	1335	3.01	1360	3.20	1384	3.39
Available External Static Pressure (Inches of Water Gauge)																				
	1.10		1.20		1.30		1.40		1.50		1.60		1.70		1.80		1.90		2.00	
CFM	RPM	BHP	RPM	BHP	RPM	BHP	RPM	BHP	RPM	BHP	RPM	BHP	RPM	BHP	RPM	BHP	RPM	BHP	RPM	BHP
5250	1118	1.81	1149	1.96	1179	2.12	1209	2.27	1238	2.43	1266	2.59	1293	2.76	1320	2.92	1346	3.09	1371	3.26
5600	1146	1.96	1177	2.12	1207	2.28	1235	2.44	1264	2.6	1292	2.77	1319	2.94	1345	3.11	1371	3.28	1396	3.46
6300	1206	2.28	1235	2.45	1264	2.63	1292	2.8	1319	2.98	1346	3.16	1372	3.34	1397	3.52	1422	3.71	1447	3.9
7000	1269	2.65	1297	2.84	1324	3.02	1351	3.21	1377	3.4	1403	3.59	1428	3.79	1453	3.98	1477	4.18	1501	4.38
7700	1337	3.08	1362	3.27	1388	3.47	1414	3.67	1438	3.87	1463	4.08	1487	4.29	1511	4.5	1535	4.71	1558	4.92
8400	1409	3.59	1433	3.79	1457	3.98	1480	4.19	1504	4.4	1527	4.62	1550	4.84	1572	5.06	1595	5.29	1617	5.51

Notes:

1. Available External Static Pressure is the static pressure difference between the return duct and the supply duct plus the static pressure drop caused by accessories and options.
2. For direct drive evaporator fan speed (rpm), refer to the applicable table in the fan performance section.
3. Data includes pressure drop due to standard filters and wet coils. No accessories or options are included in pressure drop data.
4. To determine static pressure drop due to other options/accessories, refer to the applicable table in the fan performance section.
5. Direct drive fan motor heat is negligible.
6. Factory supplied motors, in commercial equipment, are definite purpose motors, specifically designed and tested to operate reliably and continuously at all cataloged conditions. Using the full horsepower range of our fan motors as shown in our tabular data will not result in nuisance tripping or premature motor failure. Our product's warranty will not be affected.

Table 119. Evaporator fan performance - 20 ton (model WSK, WHK), horizontal

Available External Static Pressure (Inches of Water Gauge)																				
	0.10		0.20		0.30		0.40		0.50		0.60		0.70		0.80		0.90		1.00	
CFM	RPM	BHP	RPM	BHP	RPM	BHP	RPM	BHP	RPM	BHP	RPM	BHP	RPM	BHP	RPM	BHP	RPM	BHP	RPM	BHP
6000	810	0.60	847	0.72	883	0.84	920	0.97	956	1.10	989	1.23	1022	1.37	1054	1.52	1085	1.66	1114	1.80
6400	860	0.71	894	0.84	928	0.96	962	1.10	997	1.23	1029	1.37	1061	1.52	1092	1.67	1122	1.82	1150	1.98
7200	958	0.98	990	1.11	1020	1.26	1050	1.40	1081	1.55	1112	1.71	1141	1.86	1169	2.02	1197	2.18	1225	2.35
8000	1058	1.30	1087	1.46	1114	1.61	1142	1.77	1168	1.93	1196	2.10	1224	2.27	1251	2.44	1277	2.62	1303	2.80
8800	1158	1.70	1185	1.87	1210	2.04	1235	2.21	1260	2.38	1284	2.56	1309	2.74	1335	2.93	1359	3.12	1384	3.32
9600	1259	2.17	1283	2.35	1307	2.54	1330	2.72	1353	2.91	1376	3.11	1398	3.30	1420	3.50	1444	3.70	1467	3.91
Available External Static Pressure (Inches of Water Gauge)																				
	1.10		1.20		1.30		1.40		1.50		1.60		1.70		1.80		1.90		2.00	
CFM	RPM	BHP	RPM	BHP	RPM	BHP	RPM	BHP	RPM	BHP	RPM	BHP	RPM	BHP	RPM	BHP	RPM	BHP	RPM	BHP
6000	1142	1.94	1170	2.09	1197	2.24	1223	2.39	1250	2.54	1276	2.7	1302	2.86	1327	3.02	1352	3.19	1377	3.36
6400	1178	2.13	1204	2.28	1231	2.43	1256	2.59	1282	2.75	1306	2.91	1331	3.07	1356	3.24	1381	3.41	1404	3.59
7200	1252	2.53	1278	2.7	1303	2.87	1327	3.04	1350	3.21	1374	3.39	1397	3.56	1420	3.74	1442	3.92	1464	4.09
8000	1327	2.97	1352	3.16	1377	3.35	1401	3.55	1424	3.74	1446	3.93	1468	4.12	1490	4.31	1511	4.5	1532	4.69
8800	1407	3.51	1431	3.7	1453	3.9	1476	4.1	1498	4.31	1520	4.52	1542	4.74	1563	4.95	1584	5.15	1604	5.36

Table 119. Evaporator fan performance - 20 ton (model WSK, WHK), horizontal (continued)

Available External Static Pressure (Inches of Water Gauge)																				
	1.10		1.20		1.30		1.40		1.50		1.60		1.70		1.80		1.90		2.00	
CFM	RPM	BHP	RPM	BHP	RPM	BHP	RPM	BHP	RPM	BHP	RPM	BHP	RPM	BHP	RPM	BHP	RPM	BHP	RPM	BHP
9600	1490	4.12	1512	4.33	1533	4.53	1555	4.75	1575	4.96	1596	5.17	1617	5.4	1637	5.63	-	-	-	-

Notes:

1. Available External Static Pressure is the static pressure difference between the return duct and the supply duct plus the static pressure drop caused by accessories and options.
2. For direct drive evaporator fan speed (rpm), refer to the applicable table in the fan performance section.
3. Data includes pressure drop due to standard filters and wet coils. No accessories or options are included in pressure drop data.
4. To determine static pressure drop due to other options/accessories, refer to the applicable table in the fan performance section.
5. Direct drive fan motor heat is negligible.
6. Factory supplied motors, in commercial equipment, are definite purpose motors, specifically designed and tested to operate reliably and continuously at all cataloged conditions. Using the full horsepower range of our fan motors as shown in our tabular data will not result in nuisance tripping or premature motor failure. Our product's warranty will not be affected.

Table 120. Evaporator fan performance - 20 ton (model WSK, WHK), horizontal, high static motor

Available External Static Pressure (Inches of Water Gauge)																				
	0.10		0.20		0.30		0.40		0.50		0.60		0.70		0.80		0.90		1.00	
CFM	RPM	BHP	RPM	BHP	RPM	BHP	RPM	BHP	RPM	BHP	RPM	BHP	RPM	BHP	RPM	BHP	RPM	BHP	RPM	BHP
6000	810	0.60	847	0.72	883	0.84	920	0.97	956	1.10	989	1.23	1022	1.37	1054	1.52	1085	1.66	1114	1.80
6400	860	0.71	894	0.84	928	0.96	962	1.10	997	1.23	1029	1.37	1061	1.52	1092	1.67	1122	1.82	1150	1.98
7200	958	0.98	990	1.11	1020	1.26	1050	1.40	1081	1.55	1112	1.71	1141	1.86	1169	2.02	1197	2.18	1225	2.35
8000	1058	1.30	1087	1.46	1114	1.61	1142	1.77	1168	1.93	1196	2.10	1224	2.27	1251	2.44	1277	2.62	1303	2.80
8800	1158	1.70	1185	1.87	1210	2.04	1235	2.21	1260	2.38	1284	2.56	1309	2.74	1335	2.93	1359	3.12	1384	3.32
9600	1259	2.17	1283	2.35	1307	2.54	1330	2.72	1353	2.91	1376	3.11	1398	3.30	1420	3.50	1444	3.70	1467	3.91
Available External Static Pressure (Inches of Water Gauge)																				
	1.10		1.20		1.30		1.40		1.50		1.60		1.70		1.80		1.90		2.00	
CFM	RPM	BHP	RPM	BHP	RPM	BHP	RPM	BHP	RPM	BHP	RPM	BHP	RPM	BHP	RPM	BHP	RPM	BHP	RPM	BHP
6000	1142	1.94	1170	2.09	1197	2.24	1223	2.39	1250	2.54	1276	2.7	1302	2.86	1327	3.02	1352	3.19	1377	3.36
6400	1178	2.13	1204	2.28	1231	2.43	1256	2.59	1282	2.75	1306	2.91	1331	3.07	1356	3.24	1381	3.41	1404	3.59
7200	1252	2.53	1278	2.7	1303	2.87	1327	3.04	1350	3.21	1374	3.39	1397	3.56	1420	3.74	1442	3.92	1464	4.09
8000	1327	2.97	1352	3.16	1377	3.35	1401	3.55	1424	3.74	1446	3.93	1468	4.12	1490	4.31	1511	4.5	1532	4.69
8800	1407	3.51	1431	3.7	1453	3.9	1476	4.1	1498	4.31	1520	4.52	1542	4.74	1563	4.95	1584	5.15	1604	5.36
9600	1490	4.12	1512	4.33	1533	4.53	1555	4.75	1575	4.96	1596	5.17	1617	5.4	1637	5.63	1657	5.8	1676	6.03

Notes:

1. Available External Static Pressure is the static pressure difference between the return duct and the supply duct plus the static pressure drop caused by accessories and options.
2. For direct drive evaporator fan speed (rpm), refer to the applicable table in the fan performance section.
3. Data includes pressure drop due to standard filters and wet coils. No accessories or options are included in pressure drop data.
4. To determine static pressure drop due to other options/accessories, refer to the applicable table in the fan performance section.
5. Direct drive fan motor heat is negligible.
6. Factory supplied motors, in commercial equipment, are definite purpose motors, specifically designed and tested to operate reliably and continuously at all cataloged conditions. Using the full horsepower range of our fan motors as shown in our tabular data will not result in nuisance tripping or premature motor failure. Our product's warranty will not be affected.

Table 121. Evaporator fan performance - 25 ton (model WSK, WHK), horizontal

Available External Static Pressure (Inches of Water Gauge)																				
	0.10		0.20		0.30		0.40		0.50		0.60		0.70		0.80		0.90		1.00	
CFM	RPM	BHP	RPM	BHP	RPM	BHP	RPM	BHP	RPM	BHP	RPM	BHP	RPM	BHP	RPM	BHP	RPM	BHP	RPM	BHP
7500	996	1.09	1026	1.23	1055	1.38	1084	1.53	1113	1.69	1143	1.85	1172	2.01	1200	2.17	1227	2.34	1253	2.51
8000	1058	1.30	1087	1.46	1114	1.61	1142	1.77	1168	1.93	1196	2.10	1224	2.27	1251	2.44	1277	2.62	1303	2.80
9000	1183	1.81	1209	1.98	1234	2.15	1259	2.33	1283	2.51	1307	2.69	1330	2.87	1356	3.07	1380	3.26	1404	3.46
10000	1309	2.44	1333	2.63	1356	2.82	1378	3.01	1400	3.21	1422	3.41	1443	3.61	1464	3.81	1486	4.02	1509	4.23
11000	1436	3.21	1457	3.41	1478	3.62	1499	3.83	1519	4.05	1539	4.26	1559	4.48	1579	4.70	1598	4.92	1617	5.14
12000	1562	4.12	1582	4.34	1602	4.57	1621	4.80	1640	5.03	1658	5.26	1676	5.50	1695	5.74	-	-	-	-

Table 121. Evaporator fan performance - 25 ton (model WSK, WHK), horizontal (continued)

Available External Static Pressure (Inches of Water Gauge)																				
	1.10		1.20		1.30		1.40		1.50		1.60		1.70		1.80		1.90		2.00	
CFM	RPM	BHP	RPM	BHP	RPM	BHP	RPM	BHP	RPM	BHP	RPM	BHP	RPM	BHP	RPM	BHP	RPM	BHP	RPM	BHP
7500	1280	2.69	1305	2.87	1330	3.05	1354	3.23	1378	3.4	1401	3.58	1423	3.76	1445	3.94	1467	4.13	1489	4.31
8000	1327	2.97	1352	3.16	1377	3.35	1401	3.55	1424	3.74	1446	3.93	1468	4.12	1490	4.31	1511	4.5	1532	4.69
9000	1428	3.65	1451	3.85	1473	4.05	1495	4.25	1517	4.46	1539	4.68	1561	4.9	1582	5.11	1602	5.33	1622	5.54
10000	1531	4.45	1553	4.67	1574	4.88	1595	5.1	1616	5.32	1636	5.54	1655	5.77	-	-	-	-	-	-
11000	1637	5.38	1658	5.61	-	-	-	-	-	-	-	-	-	-	-	-	-	-	-	-
12000	-	-	-	-	-	-	-	-	-	-	-	-	-	-	-	-	-	-	-	-

Notes:

1. Available External Static Pressure is the static pressure difference between the return duct and the supply duct plus the static pressure drop caused by accessories and options.
2. For direct drive evaporator fan speed (rpm), refer to the applicable table in the fan performance section.
3. Data includes pressure drop due to standard filters and wet coils. No accessories or options are included in pressure drop data.
4. To determine static pressure drop due to other options/accessories, refer to the applicable table in the fan performance section.
5. Direct drive fan motor heat is negligible.
6. Factory supplied motors, in commercial equipment, are definite purpose motors, specifically designed and tested to operate reliably and continuously at all cataloged conditions. Using the full horsepower range of our fan motors as shown in our tabular data will not result in nuisance tripping or premature motor failure. Our product's warranty will not be affected.

Table 122. Evaporator fan performance - 25 ton (model WSK, WHK), horizontal, high static motor

Available External Static Pressure (Inches of Water Gauge)																				
	0.10		0.20		0.30		0.40		0.50		0.60		0.70		0.80		0.90		1.00	
CFM	RPM	BHP	RPM	BHP	RPM	BHP	RPM	BHP	RPM	BHP	RPM	BHP	RPM	BHP	RPM	BHP	RPM	BHP	RPM	BHP
7500	996	1.09	1026	1.23	1055	1.38	1084	1.53	1113	1.69	1143	1.85	1172	2.01	1200	2.17	1227	2.34	1253	2.51
8000	1058	1.30	1087	1.46	1114	1.61	1142	1.77	1168	1.93	1196	2.10	1224	2.27	1251	2.44	1277	2.62	1303	2.80
9000	1183	1.81	1209	1.98	1234	2.15	1259	2.33	1283	2.51	1307	2.69	1330	2.87	1356	3.07	1380	3.26	1404	3.46
10000	1309	2.44	1333	2.63	1356	2.82	1378	3.01	1400	3.21	1422	3.41	1443	3.61	1464	3.81	1486	4.02	1509	4.23
11000	1436	3.21	1457	3.41	1478	3.62	1499	3.83	1519	4.05	1539	4.26	1559	4.48	1579	4.70	1598	4.92	1617	5.14
12000	1562	4.12	1582	4.34	1602	4.57	1621	4.80	1640	5.03	1658	5.26	1676	5.50	1695	5.74	1710	5.82	1725	6.05
Available External Static Pressure (Inches of Water Gauge)																				
	1.10		1.20		1.30		1.40		1.50		1.60		1.70		1.80		1.90		2.00	
CFM	RPM	BHP	RPM	BHP	RPM	BHP	RPM	BHP	RPM	BHP	RPM	BHP	RPM	BHP	RPM	BHP	RPM	BHP	RPM	BHP
7500	1280	2.69	1305	2.87	1330	3.05	1354	3.23	1378	3.4	1401	3.58	1423	3.76	1445	3.94	1467	4.13	1489	4.31
8000	1327	2.97	1352	3.16	1377	3.35	1401	3.55	1424	3.74	1446	3.93	1468	4.12	1490	4.31	1511	4.5	1532	4.69
9000	1428	3.65	1451	3.85	1473	4.05	1495	4.25	1517	4.46	1539	4.68	1561	4.9	1582	5.11	1602	5.33	1622	5.54
10000	1531	4.45	1553	4.67	1574	4.88	1595	5.1	1616	5.32	1636	5.54	1655	5.77	1674	5.91	1693	6.16	1712	6.39
11000	1637	5.38	1658	5.61	1675	5.71	1695	5.95	1715	6.18	1733	6.4	1749	6.64	1766	6.71	1784	6.99	1802	7.24
12000	1743	6.31	1763	6.55	1776	6.54	1795	6.8	1814	7.04	1830	7.26	1843	7.51	1858	7.51	1875	7.82	1892	8.09

Notes:

1. Available External Static Pressure is the static pressure difference between the return duct and the supply duct plus the static pressure drop caused by accessories and options.
2. For direct drive evaporator fan speed (rpm), refer to the applicable table in the fan performance section.
3. Data includes pressure drop due to standard filters and wet coils. No accessories or options are included in pressure drop data.
4. To determine static pressure drop due to other options/accessories, refer to the applicable table in the fan performance section.
5. Direct drive fan motor heat is negligible.
6. Factory supplied motors, in commercial equipment, are definite purpose motors, specifically designed and tested to operate reliably and continuously at all cataloged conditions. Using the full horsepower range of our fan motors as shown in our tabular data will not result in nuisance tripping or premature motor failure. Our product's warranty will not be affected.

Evaporator Fan Performance — Dual Fuel

3 to 5 Tons

Table 123. Evaporator fan performance - 3 to 5 tons (model DSK), high heat

Unit Size (Tons)	Model Number	CFM	External Static Pressure (in. water) and Motor Power (Bhp)														
			Speed Set 1			Speed Set 2			Speed Set 3			Speed Set 4			Speed Set 5		
			ESP	RPM	BHP	ESP	RPM	BHP	ESP	RPM	BHP	ESP	RPM	BHP	ESP	RPM	BHP
3	DSK036*3, 4, W Downflow Airflow	900	0.65	756	0.19	0.87	851	0.25	1.19	976	0.36	1.46	1070	0.46	1.79	1171	0.59
		960	0.59	734	0.18	0.80	830	0.25	1.12	957	0.35	1.38	1053	0.45	1.71	1155	0.58
		1020	0.52	711	0.18	0.73	809	0.24	1.04	937	0.35	1.30	1034	0.44	1.62	1138	0.57
		1080	0.46	688	0.17	0.66	787	0.23	0.97	917	0.34	1.23	1015	0.43	1.54	1120	0.56
		1140	0.39	665	0.16	0.59	765	0.23	0.89	896	0.33	1.15	995	0.43	1.46	1102	0.55
		1200	0.32	640	0.16	0.52	741	0.22	0.82	874	0.32	1.07	974	0.42	1.37	1082	0.54
		1260	0.25	615	0.15	0.45	717	0.21	0.74	851	0.31	0.99	953	0.41	1.29	1063	0.53
		1320	0.18	590	0.15	0.38	692	0.21	0.66	828	0.31	0.91	931	0.40	1.20	1042	0.52
		1380	0.11	563	0.14	0.31	667	0.20	0.59	804	0.30	0.83	908	0.39	1.12	1021	0.51
		1440	—	—	—	0.23	641	0.19	0.51	780	0.29	0.74	885	0.38	1.03	999	0.50
3	DSK036*3, 4, W Horizontal Airflow	900	0.60	754	0.19	0.82	848	0.25	1.13	972	0.36	1.38	1065	0.46	1.69	1166	0.58
		960	0.53	733	0.18	0.74	828	0.25	1.05	953	0.35	1.30	1047	0.45	1.61	1148	0.57
		1020	0.45	712	0.18	0.66	807	0.24	0.97	933	0.34	1.22	1028	0.44	1.52	1131	0.57
		1080	0.37	690	0.17	0.58	786	0.23	0.89	913	0.34	1.14	1009	0.43	1.44	1112	0.56
		1140	0.30	667	0.17	0.50	764	0.23	0.80	892	0.33	1.05	989	0.42	1.35	1094	0.55
		1200	0.22	645	0.16	0.42	742	0.22	0.72	871	0.32	0.96	969	0.42	1.26	1075	0.54
		1260	0.13	622	0.15	0.34	720	0.21	0.63	850	0.31	0.87	948	0.41	1.17	1055	0.53
		1320	0.05	598	0.15	0.25	697	0.21	0.54	828	0.31	0.78	928	0.40	1.07	1036	0.52
		1380	—	—	—	0.17	674	0.20	0.45	806	0.30	0.69	906	0.39	0.98	1015	0.51
		1440	—	—	—	0.08	650	0.19	0.36	783	0.29	0.60	885	0.38	0.88	995	0.50
4	DSK048*3, 4, W Downflow Airflow	1200	0.82	856	0.32	1.30	1026	0.50	1.49	1085	0.58	1.73	1151	0.68	1.98	1200	0.79
		1280	0.72	831	0.31	1.20	1005	0.49	1.39	1065	0.57	1.62	1133	0.67	1.86	1193	0.78
		1360	0.62	804	0.30	1.09	982	0.48	1.28	1044	0.56	1.51	1114	0.66	1.75	1176	0.77
		1440	0.52	775	0.29	0.98	958	0.47	1.17	1021	0.55	1.40	1094	0.65	1.63	1158	0.76
		1520	0.42	745	0.27	0.88	932	0.45	1.06	997	0.53	1.28	1072	0.64	1.51	1138	0.74
		1600	0.32	714	0.26	0.77	905	0.44	0.94	972	0.52	1.17	1049	0.62	1.39	1117	0.73
		1680	0.22	681	0.25	0.66	876	0.43	0.83	945	0.51	1.05	1024	0.61	1.27	1094	0.72
		1760	0.11	647	0.24	0.54	846	0.41	0.72	917	0.49	0.93	997	0.59	1.15	1070	0.70
		1840	—	—	—	0.43	814	0.40	0.60	887	0.47	0.82	970	0.58	1.03	1044	0.68
		1920	—	—	—	0.32	782	0.38	0.49	856	0.46	0.70	941	0.56	0.91	1017	0.67
4	DSK048*3, 4, W Horizontal Airflow	1200	0.73	873	0.32	1.16	1037	0.51	1.34	1095	0.59	1.55	1161	0.69	—	—	—
		1280	0.62	847	0.31	1.06	1015	0.50	1.23	1075	0.58	1.44	1142	0.68	1.65	1200	0.79
		1360	0.51	820	0.30	0.95	992	0.48	1.12	1053	0.56	1.34	1123	0.67	1.54	1185	0.78
		1440	0.40	792	0.29	0.84	968	0.47	1.01	1030	0.55	1.22	1101	0.66	1.43	1166	0.76
		1520	0.28	763	0.28	0.72	942	0.46	0.89	1006	0.54	1.10	1079	0.64	1.31	1146	0.75
		1600	0.16	732	0.27	0.60	915	0.45	0.77	980	0.52	0.98	1056	0.63	1.19	1124	0.74
		1680	0.03	700	0.26	0.47	887	0.43	0.64	954	0.51	0.85	1031	0.61	1.06	1101	0.72
		1760	—	—	—	0.33	858	0.42	0.51	926	0.50	0.72	1005	0.60	0.93	1077	0.70
		1840	—	—	—	0.20	827	0.40	0.37	897	0.48	0.58	978	0.58	0.79	1052	0.69
		1920	—	—	—	0.05	795	0.39	0.23	867	0.46	0.44	950	0.56	0.65	1025	0.67

Table 123. Evaporator fan performance - 3 to 5 tons (model DSK), high heat (continued)

5	DSK060*3, 4, W Downflow Airflow	1500	1.08	1004	0.54	1.36	1091	0.66	1.63	1167	0.79	—	—	—	—	—	—
		1600	0.94	972	0.52	1.21	1063	0.65	1.48	1142	0.77	1.70	1199	0.88	—	—	—
		1700	0.80	938	0.50	1.07	1032	0.63	1.33	1114	0.76	1.55	1174	0.87	1.68	1200	0.93
		1800	0.66	902	0.48	0.92	999	0.61	1.18	1085	0.74	1.39	1147	0.85	1.52	1180	0.91
		1900	0.52	863	0.46	0.77	964	0.59	1.02	1053	0.71	1.23	1117	0.82	1.36	1152	0.89
		2000	0.37	823	0.44	0.62	926	0.56	0.86	1018	0.69	1.07	1086	0.80	1.19	1122	0.87
		2100	0.22	780	0.42	0.46	887	0.54	0.70	982	0.67	0.91	1052	0.78	1.03	1090	0.84
		2200	0.07	735	0.39	0.31	845	0.51	0.54	943	0.64	0.74	1016	0.75	0.86	1055	0.82
		2300	—	—	—	0.15	800	0.49	0.38	902	0.61	0.57	977	0.72	0.69	1018	0.79
		2400	—	—	—	—	—	—	0.22	858	0.58	0.41	936	0.69	0.52	979	0.76
5	DSK060*3, 4, W Horizontal Airflow	1500	0.92	1012	0.54	1.17	1099	0.67	1.42	1175	0.80	—	—	—	—	—	—
		1600	0.77	980	0.52	1.02	1070	0.65	1.27	1149	0.78	1.47	1208	0.89	—	—	—
		1700	0.61	947	0.51	0.86	1039	0.63	1.11	1122	0.76	1.31	1182	0.87	—	—	—
		1800	0.44	912	0.49	0.69	1007	0.61	0.94	1092	0.74	1.15	1155	0.85	1.27	1190	0.92
		1900	0.26	874	0.47	0.52	972	0.59	0.77	1060	0.72	0.97	1126	0.83	1.09	1162	0.90
		2000	0.08	835	0.45	0.33	936	0.57	0.58	1027	0.70	0.79	1095	0.81	0.91	1132	0.88
		2100	—	—	—	0.14	898	0.54	0.39	991	0.67	0.60	1062	0.78	0.72	1101	0.85
		2200	—	—	—	—	—	—	0.19	954	0.65	0.40	1027	0.76	0.52	1067	0.83
		2300	—	—	—	—	—	—	—	—	—	0.19	990	0.73	0.31	1032	0.80
		2400	—	—	—	—	—	—	—	—	—	—	—	—	0.10	994	0.77

Notes:

1. Available External Static Pressure is the static pressure difference between the return duct and the supply duct plus the static pressure drop caused by accessories and options.
2. For direct drive evaporator fan speed (rpm), refer to the applicable table in the fan performance section.
3. Data includes pressure drop due to standard filters and wet coils. No accessories or options are included in pressure drop data.
4. To determine static pressure drop due to other options/accessories, refer to the applicable table in the fan performance section.
5. For 036 models, fan motor heat (MBh) = 2.72 x Fan Bhp + 0.16. For 048 & 060 models, fan motor heat (MBh) = 2.87 x Fan Bhp + 0.15
6. Factory supplied motors, in commercial equipment, are definite purpose motors, specifically designed and tested to operate reliably and continuously at all cataloged conditions. Using the full horsepower range of our fan motors as shown in our tabular data will not result in nuisance tripping or premature motor failure. Our product's warranty will not be affected.

Table 124. Evaporator fan performance - 3 to 5 tons (model DSK), high heat, high static motor

Unit Size (tons)	Model Number	CFM	External Static Pressure (in. water) and Motor Power (Bhp)														
			Speed Set 1			Speed Set 2			Speed Set 3			Speed Set 4			Speed Set 5		
			ESP	RPM	BHP	ESP	RPM	BHP	ESP	RPM	BHP	ESP	RPM	BHP	ESP	RPM	BHP
3	DSK036*3, 4, W Downflow Airflow	900	1.31	1001	0.45	1.61	1105	0.57	2.00	1237	0.74	—	—	—	—	—	—
		960	1.24	984	0.44	1.53	1088	0.56	1.95	1222	0.73	—	—	—	—	—	—
		1020	1.17	965	0.44	1.46	1071	0.55	1.87	1206	0.72	—	—	—	—	—	—
		1080	1.10	946	0.43	1.39	1053	0.54	1.79	1189	0.71	—	—	—	—	—	—
		1140	1.03	927	0.42	1.31	1034	0.53	1.71	1172	0.70	—	—	—	—	—	—
		1200	0.95	906	0.41	1.24	1015	0.52	1.63	1154	0.69	2.00	1278	0.87	—	—	—
		1260	0.88	886	0.40	1.16	995	0.51	1.55	1135	0.68	1.94	1260	0.85	—	—	—
		1320	0.80	864	0.39	1.08	975	0.50	1.47	1116	0.66	1.86	1243	0.84	—	—	—
		1380	0.73	843	0.38	1.00	954	0.49	1.39	1097	0.65	1.77	1224	0.83	—	—	—
		1440	0.65	820	0.37	0.92	932	0.48	1.31	1076	0.64	1.69	1205	0.82	2.00	1320	1.01

Table 124. Evaporator fan performance - 3 to 5 tons (model DSK), high heat, high static motor (continued)

3	DSK036*3, 4, W Horizontal Airflow	900	1.23	983	0.44	1.51	1080	0.55	1.92	1204	0.72	—	—	—	—	—	—
		960	1.16	968	0.44	1.44	1066	0.55	1.84	1191	0.71	—	—	—	—	—	—
		1020	1.08	952	0.43	1.37	1051	0.54	1.76	1178	0.70	—	—	—	—	—	—
		1080	1.01	936	0.42	1.29	1036	0.53	1.68	1163	0.69	—	—	—	—	—	—
		1140	0.93	920	0.42	1.21	1020	0.52	1.60	1149	0.68	1.99	1263	0.86	—	—	—
		1200	0.86	903	0.41	1.13	1004	0.51	1.52	1134	0.67	1.91	1249	0.85	—	—	—
		1260	0.78	885	0.40	1.05	987	0.51	1.44	1118	0.67	1.82	1235	0.84	—	—	—
		1320	0.69	867	0.39	0.97	970	0.50	1.35	1102	0.66	1.73	1220	0.83	—	—	—
		1380	0.61	848	0.38	0.88	952	0.49	1.26	1085	0.65	1.64	1204	0.82	2.00	1310	1.00
		1440	0.53	829	0.37	0.79	934	0.48	1.17	1068	0.64	1.55	1189	0.81	1.92	1295	0.99
4	DSK048*3, 4, W Downflow Airflow	1200	1.46	1096	0.61	1.69	1172	0.71	1.97	1261	0.84	—	—	—	—	—	—
		1280	1.36	1070	0.60	1.58	1148	0.70	1.86	1238	0.82	—	—	—	—	—	—
		1360	1.25	1044	0.58	1.47	1122	0.68	1.75	1213	0.81	—	—	—	—	—	—
		1440	1.14	1016	0.57	1.36	1096	0.66	1.63	1188	0.79	2.00	1320	1.01	—	—	—
		1520	1.03	988	0.55	1.25	1068	0.65	1.52	1162	0.77	1.95	1295	0.99	—	—	—
		1600	0.92	958	0.54	1.13	1039	0.63	1.40	1134	0.76	1.82	1270	0.97	—	—	—
		1680	0.81	928	0.52	1.02	1010	0.61	1.28	1106	0.74	1.70	1244	0.95	—	—	—
		1760	0.69	896	0.50	0.90	979	0.59	1.16	1076	0.72	1.57	1216	0.93	—	—	—
		1840	0.58	863	0.48	0.78	948	0.58	1.04	1046	0.70	1.44	1188	0.90	—	—	—
		1920	0.46	830	0.46	0.66	915	0.56	0.91	1015	0.68	1.31	1158	0.88	2.00	1381	1.31
4	DSK048*3, 4, W Horizontal Airflow	1200	1.35	1080	0.60	1.58	1151	0.70	1.85	1234	0.82	—	—	—	—	—	—
		1280	1.24	1058	0.59	1.46	1130	0.69	1.74	1214	0.81	—	—	—	—	—	—
		1360	1.13	1036	0.58	1.34	1109	0.67	1.62	1194	0.80	2.00	1314	1.00	—	—	—
		1440	1.01	1012	0.57	1.22	1086	0.66	1.49	1172	0.78	1.92	1295	0.99	—	—	—
		1520	0.89	988	0.55	1.10	1063	0.65	1.37	1150	0.77	1.79	1274	0.97	—	—	—
		1600	0.76	963	0.54	0.97	1039	0.63	1.24	1127	0.75	1.66	1253	0.95	—	—	—
		1680	0.63	937	0.52	0.84	1014	0.62	1.10	1103	0.73	1.52	1231	0.94	—	—	—
		1760	0.50	910	0.51	0.71	988	0.60	0.97	1078	0.72	1.38	1208	0.92	—	—	—
		1840	0.37	882	0.49	0.57	961	0.58	0.83	1052	0.70	1.23	1184	0.90	2.00	1386	1.31
		1920	0.23	853	0.48	0.43	933	0.57	0.68	1026	0.68	1.09	1159	0.88	1.87	1364	1.29
5	DSK060*3, 4, W Downflow Airflow	1500	1.49	1150	0.75	1.76	1237	0.88	2.00	1317	1.02	—	—	—	—	—	—
		1600	1.35	1116	0.73	1.61	1205	0.86	1.88	1286	0.99	—	—	—	—	—	—
		1700	1.20	1080	0.71	1.46	1170	0.84	1.72	1253	0.97	2.00	1356	1.16	—	—	—
		1800	1.05	1042	0.68	1.30	1134	0.81	1.56	1218	0.94	1.92	1323	1.13	—	—	—
		1900	0.89	1003	0.66	1.14	1097	0.78	1.40	1182	0.91	1.75	1290	1.10	—	—	—
		2000	0.74	963	0.63	0.98	1057	0.76	1.23	1145	0.89	1.58	1254	1.07	—	—	—
		2100	0.58	920	0.60	0.82	1017	0.73	1.07	1106	0.86	1.41	1217	1.04	—	—	—
		2200	0.42	876	0.57	0.66	974	0.70	0.90	1065	0.82	1.23	1179	1.01	2.00	1398	1.49
		2300	0.26	831	0.54	0.49	930	0.66	0.73	1022	0.79	1.05	1138	0.98	1.87	1363	1.45
		2400	0.09	784	0.51	0.32	885	0.63	0.55	978	0.76	0.87	1096	0.94	1.68	1326	1.41
5	DSK060*3, 4, W Horizontal Airflow	1500	1.34	1139	0.75	1.61	1220	0.87	1.88	1294	1.00	—	—	—	—	—	—
		1600	1.18	1110	0.73	1.45	1192	0.85	1.71	1267	0.98	2.08	1361	1.17	—	—	—
		1700	1.02	1079	0.71	1.28	1163	0.83	1.54	1240	0.96	1.90	1335	1.14	—	—	—
		1800	0.85	1048	0.69	1.10	1133	0.81	1.36	1211	0.94	1.72	1308	1.12	—	—	—
		1900	0.67	1014	0.66	0.92	1101	0.79	1.17	1180	0.91	1.53	1279	1.10	—	—	—
		2000	0.49	980	0.64	0.74	1068	0.76	0.99	1149	0.89	1.33	1250	1.07	—	—	—
		2100	0.30	944	0.62	0.55	1033	0.74	0.79	1115	0.86	1.14	1218	1.04	2.00	1414	1.51
		2200	0.11	906	0.59	0.35	997	0.71	0.59	1081	0.84	0.93	1186	1.02	1.78	1386	1.48
		2300	-0.09	868	0.57	0.15	960	0.69	0.39	1045	0.81	0.73	1152	0.99	1.56	1357	1.45
		2400	-0.29	828	0.54	-0.05	921	0.66	0.18	1008	0.78	0.51	1117	0.96	1.33	1327	1.41

Table 124. Evaporator fan performance - 3 to 5 tons (model DSK), high heat, high static motor (continued)

Notes:

1. Available External Static Pressure is the static pressure difference between the return duct and the supply duct plus the static pressure drop caused by accessories and options.
2. For direct drive evaporator fan speed (rpm), refer to the applicable table in the fan performance section.
3. Data includes pressure drop due to standard filters and wet coils. No accessories or options are included in pressure drop data.
4. To determine static pressure drop due to other options/accessories, refer to the applicable table in the fan performance section.
5. For 036 models, fan motor heat (MBh) = 2.72 x Fan Bhp + 0.16. For 048 & 060 models, fan motor heat (MBh) = 2.87 x Fan Bhp + 0.15
6. Factory supplied motors, in commercial equipment, are definite purpose motors, specifically designed and tested to operate reliably and continuously at all cataloged conditions. Using the full horsepower range of our fan motors as shown in our tabular data will not result in nuisance tripping or premature motor failure. Our product's warranty will not be affected.

Table 125. Evaporator fan performance – 3 ton (model DHK), downflow, high heat

Available External Static Pressure (Inches of Water Gauge)																				
	0.10		0.20		0.30		0.40		0.50		0.60		0.70		0.80		0.90		1.00	
CFM	RPM	BHP	RPM	BHP	RPM	BHP	RPM	BHP	RPM	BHP	RPM	BHP	RPM	BHP	RPM	BHP	RPM	BHP	RPM	BHP
900[a]	364	0.03	462	0.06	535	0.10	599	0.14	657	0.18	709	0.22	757	0.27	802	0.32	844	0.37	884	0.42
960	374	0.03	470	0.07	544	0.10	606	0.14	664	0.19	716	0.23	764	0.28	809	0.33	851	0.38	891	0.44
1080	395	0.04	487	0.08	562	0.11	624	0.16	679	0.20	731	0.25	779	0.30	823	0.35	866	0.40	905	0.46
1200	418	0.05	504	0.08	579	0.13	642	0.17	696	0.22	746	0.27	793	0.32	838	0.37	880	0.43	920	0.49
1320	442	0.05	522	0.09	596	0.14	660	0.18	714	0.23	764	0.29	809	0.34	853	0.40	895	0.45	934	0.51
1440	467	0.06	543	0.10	613	0.15	676	0.20	733	0.25	782	0.31	827	0.36	869	0.42	909	0.48	949	0.54
Available External Static Pressure (Inches of Water Gauge)																				
	1.10		1.20		1.30		1.40		1.50		1.60		1.70		1.80		1.90		2.00	
CFM	RPM	BHP	RPM	BHP	RPM	BHP	RPM	BHP	RPM	BHP	RPM	BHP	RPM	BHP	RPM	BHP	RPM	BHP	RPM	BHP
900[b]	922	0.48	959	0.54	994	0.6	1027	0.66	1060	0.72	1091	0.78	1122	0.85	1151	0.92	1181	0.99	1209	1.06
960	929	0.49	966	0.55	1001	0.61	1034	0.67	1067	0.74	1098	0.8	1128	0.87	1158	0.94	1187	1.01	1215	1.08
1080	943	0.52	980	0.58	1014	0.64	1048	0.71	1080	0.77	1112	0.84	1142	0.91	1172	0.98	1200	1.05	1228	1.12
1200	958	0.55	994	0.61	1029	0.67	1062	0.74	1094	0.81	1126	0.88	1156	0.95	1185	1.02	1214	1.09	1242	1.17
1320	972	0.58	1008	0.64	1043	0.71	1076	0.78	1109	0.85	1140	0.92	1170	0.99	1199	1.06	1228	1.14	1256	1.22
1440	987	0.61	1023	0.68	1057	0.74	1091	0.81	1123	0.89	1154	0.96	1184	1.03	1214	1.11	1242	1.19	1270	1.27

Notes:

1. Available External Static Pressure is the static pressure difference between the return duct and the supply duct plus the static pressure drop caused by accessories and options.
2. For direct drive evaporator fan speed (rpm), refer to the applicable table in the fan performance section.
3. Data includes pressure drop due to standard filters and wet coils. No accessories or options are included in pressure drop data.
4. To determine static pressure drop due to other options/accessories, refer to the applicable table in the fan performance section.
5. Direct drive fan motor heat is negligible.
6. Factory supplied motors, in commercial equipment, are definite purpose motors, specifically designed and tested to operate reliably and continuously at all cataloged conditions. Using the full horsepower range of our fan motors as shown in our tabular data will not result in nuisance tripping or premature motor failure. Our product's warranty will not be affected.

[a] Model digit 11 selection of High Gas Heat is limited to minimum 320 cfm/ton full load airflow.
[b] Model digit 11 selection of High Gas Heat is limited to minimum 320 cfm/ton full load airflow.

Table 126. Evaporator fan performance – 3 ton (model DHK), horizontal, high heat

Available External Static Pressure (Inches of Water Gauge)																				
	0.10		0.20		0.30		0.40		0.50		0.60		0.70		0.80		0.90		1.00	
CFM	RPM	BHP	RPM	BHP	RPM	BHP	RPM	BHP	RPM	BHP	RPM	BHP	RPM	BHP	RPM	BHP	RPM	BHP	RPM	BHP
900[a]	376	0.04	460	0.06	530	0.10	590	0.13	643	0.17	695	0.21	743	0.25	788	0.30	830	0.35	870	0.39
960	389	0.04	471	0.07	540	0.10	599	0.14	652	0.18	702	0.22	750	0.26	794	0.31	836	0.36	876	0.41
1080	416	0.05	493	0.08	560	0.11	619	0.15	671	0.19	719	0.24	763	0.28	807	0.33	849	0.38	889	0.43
1200	444	0.06	516	0.09	581	0.13	639	0.17	690	0.21	738	0.26	782	0.31	823	0.36	862	0.41	902	0.46
1320	473	0.07	542	0.11	603	0.14	659	0.19	710	0.23	757	0.28	801	0.33	842	0.38	880	0.44	917	0.49
1440	502	0.08	568	0.12	626	0.16	680	0.21	731	0.26	777	0.31	820	0.36	861	0.41	899	0.47	936	0.52

Table 126. Evaporator fan performance – 3 ton (model DHK), horizontal, high heat (continued)

Available External Static Pressure (Inches of Water Gauge)																				
	1.10		1.20		1.30		1.40		1.50		1.60		1.70		1.80		1.90		2.00	
CFM	RPM	BHP	RPM	BHP	RPM	BHP	RPM	BHP	RPM	BHP	RPM	BHP	RPM	BHP	RPM	BHP	RPM	BHP	RPM	BHP
900[b]	908	0.44	944	0.5	979	0.55	1013	0.6	1045	0.66	1076	0.72	1106	0.78	1136	0.84	1165	0.9	1192	0.96
960	914	0.46	950	0.51	985	0.57	1019	0.62	1051	0.68	1082	0.74	1113	0.8	1142	0.86	1171	0.92	1198	0.99
1080	927	0.49	963	0.54	998	0.6	1031	0.66	1063	0.72	1094	0.78	1125	0.84	1154	0.9	1183	0.97	1211	1.03
1200	939	0.52	975	0.57	1010	0.63	1043	0.69	1076	0.75	1107	0.82	1137	0.88	1166	0.95	1195	1.02	1223	1.08
1320	952	0.55	988	0.61	1023	0.67	1056	0.73	1088	0.79	1119	0.86	1150	0.93	1179	0.99	1207	1.06	1235	1.13
1440	970	0.58	1004	0.64	1036	0.71	1069	0.77	1101	0.84	1132	0.9	1162	0.97	1192	1.04	1220	1.11	1248	1.19

Notes:

1. Available External Static Pressure is the static pressure difference between the return duct and the supply duct plus the static pressure drop caused by accessories and options.
2. For direct drive evaporator fan speed (rpm), refer to the applicable table in the fan performance section.
3. Data includes pressure drop due to standard filters and wet coils. No accessories or options are included in pressure drop data.
4. To determine static pressure drop due to other options/accessories, refer to the applicable table in the fan performance section.
5. Direct drive fan motor heat is negligible.
6. Factory supplied motors, in commercial equipment, are definite purpose motors, specifically designed and tested to operate reliably and continuously at all cataloged conditions. Using the full horsepower range of our fan motors as shown in our tabular data will not result in nuisance tripping or premature motor failure. Our product's warranty will not be affected.

[a] Model digit 11 selection of High Gas Heat is limited to minimum 320 cfm/ton full load airflow.
[b] Model digit 11 selection of High Gas Heat is limited to minimum 320 cfm/ton full load airflow.

Table 127. Evaporator fan performance – 4 ton (model DHK), downflow, high heat

Available External Static Pressure (Inches of Water Gauge)																				
	0.10		0.20		0.30		0.40		0.50		0.60		0.70		0.80		0.90		1.00	
CFM	RPM	BHP	RPM	BHP	RPM	BHP	RPM	BHP	RPM	BHP	RPM	BHP	RPM	BHP	RPM	BHP	RPM	BHP	RPM	BHP
1200[a]	418	0.05	504	0.08	579	0.13	642	0.17	696	0.22	746	0.27	793	0.32	838	0.37	880	0.43	920	0.49
1280	434	0.05	516	0.09	590	0.13	654	0.18	708	0.23	758	0.28	803	0.33	848	0.39	890	0.45	929	0.51
1440	467	0.06	543	0.10	613	0.15	676	0.20	733	0.25	782	0.31	827	0.36	869	0.42	909	0.48	949	0.54
1600	502	0.08	572	0.12	637	0.17	698	0.22	754	0.28	806	0.34	851	0.40	893	0.46	933	0.52	971	0.59
1760	538	0.09	603	0.14	664	0.19	722	0.25	777	0.31	828	0.37	875	0.43	917	0.50	957	0.56	994	0.63
1920	575	0.11	636	0.16	694	0.22	747	0.27	800	0.34	850	0.40	896	0.47	940	0.54	981	0.61	1018	0.68
Available External Static Pressure (Inches of Water Gauge)																				
	1.10		1.20		1.30		1.40		1.50		1.60		1.70		1.80		1.90		2.00	
CFM	RPM	BHP	RPM	BHP	RPM	BHP	RPM	BHP	RPM	BHP	RPM	BHP	RPM	BHP	RPM	BHP	RPM	BHP	RPM	BHP
1200[b]	958	0.55	994	0.61	1029	0.67	1062	0.74	1094	0.81	1126	0.88	1156	0.95	1185	1.02	1214	1.09	1242	1.17
1280	967	0.57	1003	0.63	1038	0.7	1071	0.76	1104	0.83	1135	0.9	1165	0.98	1195	1.05	1223	1.12	1251	1.2
1440	987	0.61	1023	0.68	1057	0.74	1091	0.81	1123	0.89	1154	0.96	1184	1.03	1214	1.11	1242	1.19	1270	1.27
1600	1007	0.65	1042	0.72	1077	0.79	1110	0.87	1142	0.94	1173	1.02	1203	1.09	1233	1.17	1261	1.25	1289	1.34
1760	1030	0.7	1064	0.77	1097	0.84	1130	0.92	1162	1	1193	1.08	1223	1.16	1252	1.24	1280	1.32	1308	1.41
1920	1054	0.75	1088	0.83	1121	0.9	1152	0.98	1183	1.06	1213	1.14	1242	1.22	1272	1.31	1300	1.39	1328	1.48

Notes:

1. Available External Static Pressure is the static pressure difference between the return duct and the supply duct plus the static pressure drop caused by accessories and options.
2. For direct drive evaporator fan speed (rpm), refer to the applicable table in the fan performance section.
3. Data includes pressure drop due to standard filters and wet coils. No accessories or options are included in pressure drop data.
4. To determine static pressure drop due to other options/accessories, refer to the applicable table in the fan performance section.
5. Direct drive fan motor heat is negligible.
6. Factory supplied motors, in commercial equipment, are definite purpose motors, specifically designed and tested to operate reliably and continuously at all cataloged conditions. Using the full horsepower range of our fan motors as shown in our tabular data will not result in nuisance tripping or premature motor failure. Our product's warranty will not be affected.

[a] Model digit 11 selection of High Gas Heat is limited to minimum 320 cfm/ton full load airflow.
[b] Model digit 11 selection of High Gas Heat is limited to minimum 320 cfm/ton full load airflow.

Evaporator Fan Performance — Dual Fuel

Table 128. Evaporator fan performance – 4 ton (model DHK), horizontal, high heat

Available External Static Pressure (Inches of Water Gauge)																				
	0.10		0.20		0.30		0.40		0.50		0.60		0.70		0.80		0.90		1.00	
CFM	RPM	BHP	RPM	BHP	RPM	BHP	RPM	BHP	RPM	BHP	RPM	BHP	RPM	BHP	RPM	BHP	RPM	BHP	RPM	BHP
1200[a]	444	0.06	516	0.09	581	0.13	639	0.17	690	0.21	738	0.26	782	0.31	823	0.36	862	0.41	902	0.46
1280	463	0.07	533	0.10	595	0.14	652	0.18	704	0.23	751	0.27	795	0.32	836	0.37	874	0.43	911	0.48
1440	502	0.08	568	0.12	626	0.16	680	0.21	731	0.26	777	0.31	820	0.36	861	0.41	899	0.47	936	0.52
1600	543	0.10	605	0.15	660	0.19	710	0.24	759	0.29	804	0.34	847	0.40	887	0.45	925	0.51	961	0.57
1760	584	0.13	643	0.17	695	0.22	743	0.27	789	0.32	832	0.38	874	0.44	914	0.50	951	0.56	987	0.62
1920	626	0.16	682	0.21	732	0.26	778	0.31	821	0.37	863	0.42	903	0.48	941	0.55	978	0.61	1014	0.68
Available External Static Pressure (Inches of Water Gauge)																				
	1.10		1.20		1.30		1.40		1.50		1.60		1.70		1.80		1.90		2.00	
CFM	RPM	BHP	RPM	BHP	RPM	BHP	RPM	BHP	RPM	BHP	RPM	BHP	RPM	BHP	RPM	BHP	RPM	BHP	RPM	BHP
1200[b]	939	0.52	975	0.57	1010	0.63	1043	0.69	1076	0.75	1107	0.82	1137	0.88	1166	0.95	1195	1.02	1223	1.08
1280	948	0.54	984	0.6	1019	0.66	1052	0.72	1084	0.78	1115	0.85	1145	0.91	1175	0.98	1203	1.05	1231	1.12
1440	970	0.58	1004	0.64	1036	0.71	1069	0.77	1101	0.84	1132	0.9	1162	0.97	1192	1.04	1220	1.11	1248	1.19
1600	995	0.63	1028	0.7	1060	0.76	1091	0.83	1120	0.9	1149	0.96	1179	1.04	1208	1.11	1237	1.18	1265	1.26
1760	1021	0.69	1054	0.76	1085	0.82	1116	0.89	1145	0.96	1174	1.03	1202	1.11	1228	1.18	1255	1.26	1282	1.33
1920	1047	0.75	1080	0.82	1111	0.89	1141	0.96	1170	1.03	1199	1.11	1226	1.18	1253	1.26	1279	1.34	1305	1.42

Notes:

1. Available External Static Pressure is the static pressure difference between the return duct and the supply duct plus the static pressure drop caused by accessories and options.
2. For direct drive evaporator fan speed (rpm), refer to the applicable table in the fan performance section.
3. Data includes pressure drop due to standard filters and wet coils. No accessories or options are included in pressure drop data.
4. To determine static pressure drop due to other options/accessories, refer to the applicable table in the fan performance section.
5. Direct drive fan motor heat is negligible.
6. Factory supplied motors, in commercial equipment, are definite purpose motors, specifically designed and tested to operate reliably and continuously at all cataloged conditions. Using the full horsepower range of our fan motors as shown in our tabular data will not result in nuisance tripping or premature motor failure. Our product's warranty will not be affected.

[a] Model digit 11 selection of High Gas Heat is limited to minimum 320 cfm/ton full load airflow.
[b] Model digit 11 selection of High Gas Heat is limited to minimum 320 cfm/ton full load airflow.

Table 129. Evaporator fan performance – 5 ton (model DHK), downflow, high heat

Available External Static Pressure (Inches of Water Gauge)																				
	0.10		0.20		0.30		0.40		0.50		0.60		0.70		0.80		0.90		1.00	
CFM	RPM	BHP	RPM	BHP	RPM	BHP	RPM	BHP	RPM	BHP	RPM	BHP	RPM	BHP	RPM	BHP	RPM	BHP	RPM	BHP
1500[a]	480	0.07	554	0.11	622	0.16	684	0.21	741	0.26	791	0.32	836	0.37	878	0.43	918	0.50	956	0.56
1600	502	0.08	572	0.12	637	0.17	698	0.22	754	0.28	806	0.34	851	0.40	893	0.46	933	0.52	971	0.59
1800	547	0.10	611	0.15	672	0.20	728	0.25	782	0.31	833	0.38	880	0.44	923	0.51	963	0.57	1000	0.64
2000	593	0.12	653	0.18	709	0.23	761	0.29	812	0.35	861	0.42	908	0.49	951	0.56	992	0.63	1031	0.70
2200	640	0.15	696	0.21	748	0.27	798	0.33	845	0.40	891	0.47	936	0.54	979	0.61	1020	0.69	1058	0.77
2400	687	0.19	741	0.25	789	0.31	836	0.38	881	0.45	924	0.52	966	0.59	1007	0.67	1048	0.75	1086	0.83
Available External Static Pressure (Inches of Water Gauge)																				
	1.10		1.20		1.30		1.40		1.50		1.60		1.70		1.80		1.90		2.00	
CFM	RPM	BHP	RPM	BHP	RPM	BHP	RPM	BHP	RPM	BHP	RPM	BHP	RPM	BHP	RPM	BHP	RPM	BHP	RPM	BHP
1500[b]	994	0.62	1030	0.69	1065	0.76	1098	0.83	1130	0.91	1161	0.98	1191	1.06	1221	1.13	1249	1.21	1277	1.29
1600	1007	0.65	1042	0.72	1077	0.79	1110	0.87	1142	0.94	1173	1.02	1203	1.09	1233	1.17	1261	1.25	1289	1.34
1800	1036	0.71	1070	0.78	1103	0.86	1135	0.93	1167	1.01	1198	1.09	1228	1.17	1257	1.26	1285	1.34	1313	1.43
2000	1066	0.78	1100	0.85	1133	0.93	1164	1.01	1195	1.09	1224	1.17	1253	1.26	1282	1.34	1310	1.43	1337	1.52
2200	1095	0.85	1130	0.93	1163	1.01	1194	1.09	1224	1.18	1254	1.26	1282	1.35	1310	1.44	1337	1.53	1363	1.62

Table 129. Evaporator fan performance – 5 ton (model DHK), downflow, high heat (continued)

Available External Static Pressure (Inches of Water Gauge)																				
	1.10		1.20		1.30		1.40		1.50		1.60		1.70		1.80		1.90		2.00	
CFM	RPM	BHP	RPM	BHP	RPM	BHP	RPM	BHP	RPM	BHP	RPM	BHP	RPM	BHP	RPM	BHP	RPM	BHP	RPM	BHP
2400	1123	0.92	1158	1	1192	1.09	1225	1.18	1255	1.27	1284	1.36	1312	1.45	1340	1.54	1367	1.64	1393	1.73

Notes:

1. Available External Static Pressure is the static pressure difference between the return duct and the supply duct plus the static pressure drop caused by accessories and options.
2. For direct drive evaporator fan speed (rpm), refer to the applicable table in the fan performance section.
3. Data includes pressure drop due to standard filters and wet coils. No accessories or options are included in pressure drop data.
4. To determine static pressure drop due to other options/accessories, refer to the applicable table in the fan performance section.
5. Direct drive fan motor heat is negligible.
6. Factory supplied motors, in commercial equipment, are definite purpose motors, specifically designed and tested to operate reliably and continuously at all cataloged conditions. Using the full horsepower range of our fan motors as shown in our tabular data will not result in nuisance tripping or premature motor failure. Our product's warranty will not be affected.

(a) Model digit 11 selection of High Gas Heat is limited to minimum 320 cfm/ton full load airflow.
(b) Model digit 11 selection of High Gas Heat is limited to minimum 320 cfm/ton full load airflow.

Table 130. Evaporator fan performance – 5 ton (model DHK), horizontal, high heat

Available External Static Pressure (Inches of Water Gauge)																				
	0.10		0.20		0.30		0.40		0.50		0.60		0.70		0.80		0.90		1.00	
CFM	RPM	BHP	RPM	BHP	RPM	BHP	RPM	BHP	RPM	BHP	RPM	BHP	RPM	BHP	RPM	BHP	RPM	BHP	RPM	BHP
1500[a]	517	0.09	582	0.13	639	0.17	691	0.22	741	0.27	787	0.32	830	0.37	870	0.43	909	0.48	945	0.54
1600	543	0.10	605	0.15	660	0.19	710	0.24	759	0.29	804	0.34	847	0.40	887	0.45	925	0.51	961	0.57
1800	594	0.14	652	0.18	704	0.23	752	0.28	797	0.33	840	0.39	881	0.45	921	0.51	958	0.57	993	0.64
2000	647	0.17	701	0.23	751	0.28	796	0.33	838	0.39	878	0.45	918	0.51	955	0.57	992	0.64	1027	0.71
2200	701	0.22	752	0.28	798	0.33	841	0.39	882	0.45	920	0.51	957	0.58	993	0.65	1028	0.72	1062	0.79
2400	756	0.27	803	0.34	847	0.40	888	0.46	927	0.52	963	0.59	999	0.66	1033	0.73	1066	0.80	1099	0.88
Available External Static Pressure (Inches of Water Gauge)																				
	1.10		1.20		1.30		1.40		1.50		1.60		1.70		1.80		1.90		2.00	
CFM	RPM	BHP	RPM	BHP	RPM	BHP	RPM	BHP	RPM	BHP	RPM	BHP	RPM	BHP	RPM	BHP	RPM	BHP	RPM	BHP
1500[b]	980	0.6	1013	0.66	1045	0.73	1075	0.79	1107	0.86	1138	0.93	1169	1	1198	1.07	1226	1.14	1254	1.21
1600	995	0.63	1028	0.7	1060	0.76	1091	0.83	1120	0.9	1149	0.96	1179	1.04	1208	1.11	1237	1.18	1265	1.26
1800	1027	0.7	1060	0.77	1092	0.84	1122	0.91	1152	0.98	1180	1.05	1208	1.13	1235	1.2	1261	1.28	1286	1.35
2000	1061	0.78	1093	0.85	1124	0.92	1154	1	1183	1.07	1212	1.15	1239	1.22	1266	1.3	1292	1.38	1317	1.46
2200	1095	0.86	1127	0.94	1158	1.01	1187	1.09	1216	1.17	1244	1.25	1271	1.33	1298	1.41	1324	1.5	1349	1.58
2400	1130	0.95	1161	1.03	1192	1.11	1221	1.19	1250	1.27	1277	1.36	1304	1.44	1330	1.53	1356	1.62	1381	1.71

Notes:

1. Available External Static Pressure is the static pressure difference between the return duct and the supply duct plus the static pressure drop caused by accessories and options.
2. For direct drive evaporator fan speed (rpm), refer to the applicable table in the fan performance section.
3. Data includes pressure drop due to standard filters and wet coils. No accessories or options are included in pressure drop data.
4. To determine static pressure drop due to other options/accessories, refer to the applicable table in the fan performance section.
5. Direct drive fan motor heat is negligible.
6. Factory supplied motors, in commercial equipment, are definite purpose motors, specifically designed and tested to operate reliably and continuously at all cataloged conditions. Using the full horsepower range of our fan motors as shown in our tabular data will not result in nuisance tripping or premature motor failure. Our product's warranty will not be affected.

(a) Model digit 11 selection of High Gas Heat is limited to minimum 320 cfm/ton full load airflow.
(b) Model digit 11 selection of High Gas Heat is limited to minimum 320 cfm/ton full load airflow.

6 to 25 Tons — Downflow

Table 131. Evaporator fan performance - 6 ton (model DSK, DHK), downflow, high heat

Available External Static Pressure (Inches of Water Gauge)																				
	0.10		0.20		0.30		0.40		0.50		0.60		0.70		0.80		0.90		1.00	
CFM	RPM	BHP	RPM	BHP	RPM	BHP	RPM	BHP	RPM	BHP	RPM	BHP	RPM	BHP	RPM	BHP	RPM	BHP	RPM	BHP
1800	571	0.11	639	0.16	704	0.22	761	0.28	814	0.34	864	0.41	910	0.47	953	0.54	993	0.61	1032	0.69
1920	600	0.13	664	0.18	726	0.24	783	0.30	835	0.37	884	0.44	929	0.51	972	0.58	1012	0.65	1051	0.73
2040	629	0.15	690	0.20	749	0.27	805	0.33	856	0.40	904	0.47	949	0.54	991	0.61	1031	0.69	1069	0.77

Table 131. Evaporator fan performance - 6 ton (model DSK, DHK), downflow, high heat (continued)

Available External Static Pressure (Inches of Water Gauge)																				
	0.10		0.20		0.30		0.40		0.50		0.60		0.70		0.80		0.90		1.00	
CFM	RPM	BHP	RPM	BHP	RPM	BHP	RPM	BHP	RPM	BHP	RPM	BHP	RPM	BHP	RPM	BHP	RPM	BHP	RPM	BHP
2160	659	0.17	717	0.23	773	0.29	828	0.36	878	0.43	924	0.50	969	0.58	1011	0.65	1051	0.73	1089	0.81
2280	689	0.19	745	0.25	798	0.32	850	0.39	900	0.46	946	0.54	989	0.62	1031	0.69	1070	0.78	1108	0.86
2400	719	0.22	773	0.28	824	0.35	874	0.42	923	0.50	968	0.58	1011	0.66	1051	0.74	1090	0.82	1128	0.91
2520	750	0.25	801	0.31	850	0.38	898	0.46	945	0.53	990	0.61	1032	0.70	1072	0.78	1110	0.87	1148	0.96
2640	781	0.28	830	0.35	877	0.42	923	0.49	968	0.57	1013	0.66	1054	0.74	1094	0.83	1131	0.92	1168	1.01
2760	812	0.31	859	0.38	905	0.46	949	0.53	992	0.61	1035	0.70	1077	0.79	1116	0.88	1153	0.97	1188	1.07
2880	843	0.35	888	0.42	933	0.50	975	0.58	1017	0.66	1058	0.75	1099	0.84	1138	0.93	1175	1.03	1210	1.13
Available External Static Pressure (Inches of Water Gauge)																				
	1.10		1.20		1.30		1.40		1.50		1.60		1.70		1.80		1.90		2.00	
CFM	RPM	BHP	RPM	BHP	RPM	BHP	RPM	BHP	RPM	BHP	RPM	BHP	RPM	BHP	RPM	BHP	RPM	BHP	RPM	BHP
1800	1070	0.76	1105	0.84	1139	0.91	1172	0.99	1204	1.07	1235	1.16	1265	1.24	1294	1.33	1323	1.41	1350	1.5
1920	1088	0.8	1123	0.88	1157	0.96	1190	1.04	1222	1.13	1253	1.21	1283	1.3	1312	1.39	1340	1.47	1368	1.57
2040	1106	0.85	1141	0.93	1175	1.01	1208	1.09	1240	1.18	1270	1.27	1300	1.36	1329	1.45	1357	1.54	1385	1.63
2160	1125	0.89	1160	0.98	1193	1.06	1226	1.15	1258	1.24	1288	1.33	1318	1.42	1347	1.51	1375	1.61	1403	1.7
2280	1144	0.94	1179	1.03	1212	1.12	1244	1.21	1276	1.3	1306	1.39	1336	1.48	1365	1.58	1393	1.67	1420	1.77
2400	1164	0.99	1198	1.08	1231	1.17	1263	1.26	1294	1.36	1325	1.45	1354	1.55	1383	1.65	1411	1.75	1438	1.85
2520	1183	1.05	1217	1.14	1250	1.23	1282	1.33	1313	1.42	1343	1.52	1372	1.62	1401	1.72	1429	1.82	1456	1.92
2640	1203	1.1	1237	1.2	1270	1.29	1302	1.39	1332	1.49	1362	1.59	1391	1.69	1419	1.79	1447	1.9	1474	2
2760	1223	1.16	1257	1.26	1290	1.36	1321	1.46	1352	1.56	1381	1.66	1410	1.76	1438	1.87	1466	1.98	1493	2.08
2880	1244	1.22	1277	1.32	1310	1.42	1341	1.53	1371	1.63	1401	1.73	1430	1.84	1458	1.95	1485	2.06	1512	2.17

Notes:

1. Available External Static Pressure is the static pressure difference between the return duct and the supply duct plus the static pressure drop caused by accessories and options.
2. For direct drive evaporator fan speed (rpm), refer to the applicable table in the fan performance section.
3. Data includes pressure drop due to standard filters and wet coils. No accessories or options are included in pressure drop data.
4. To determine static pressure drop due to other options/accessories, refer to the applicable table in the fan performance section.
5. Direct drive fan motor heat (MBh) = 2.7912 x fan bhp + 0.1388
6. Factory supplied motors, in commercial equipment, are definite purpose motors, specifically designed and tested to operate reliably and continuously at all cataloged conditions. Using the full horsepower range of our fan motors as shown in our tabular data will not result in nuisance tripping or premature motor failure. Our product's warranty will not be affected.

Table 132. Evaporator fan performance - 7.5 ton (model DSK, DHK), downflow, high heat

Available External Static Pressure (Inches of Water Gauge)																				
	0.10		0.20		0.30		0.40		0.50		0.60		0.70		0.80		0.90		1.00	
CFM	RPM	BHP	RPM	BHP	RPM	BHP	RPM	BHP	RPM	BHP	RPM	BHP	RPM	BHP	RPM	BHP	RPM	BHP	RPM	BHP
2250	675	0.18	732	0.24	786	0.30	840	0.37	890	0.45	937	0.52	980	0.60	1022	0.68	1062	0.76	1100	0.84
2400	712	0.21	767	0.28	818	0.34	868	0.41	917	0.49	963	0.57	1006	0.65	1047	0.73	1087	0.81	1124	0.90
2550	750	0.25	801	0.31	850	0.38	898	0.45	945	0.53	990	0.61	1033	0.70	1073	0.79	1111	0.87	1149	0.96
2700	788	0.28	837	0.35	884	0.43	930	0.50	973	0.58	1018	0.67	1060	0.75	1100	0.84	1137	0.93	1173	1.03
2850	826	0.33	873	0.40	918	0.47	961	0.55	1004	0.64	1046	0.72	1087	0.81	1126	0.91	1164	1.00	1199	1.10
3000	864	0.37	910	0.45	953	0.53	994	0.61	1035	0.69	1074	0.78	1115	0.88	1154	0.97	1191	1.07	1226	1.17
3150	903	0.42	947	0.50	988	0.58	1028	0.67	1067	0.76	1106	0.85	1143	0.94	1181	1.04	1218	1.14	1253	1.25
3300	942	0.48	984	0.56	1023	0.65	1062	0.73	1099	0.82	1137	0.92	1173	1.01	1209	1.12	1245	1.22	1280	1.33
3600	1021	0.61	1059	0.70	1096	0.79	1132	0.88	1167	0.98	1201	1.07	1236	1.18	1269	1.28	1301	1.39	1335	1.50
Available External Static Pressure (Inches of Water Gauge)																				
	1.10		1.20		1.30		1.40		1.50		1.60		1.70		1.80		1.90		2.00	
CFM	RPM	BHP	RPM	BHP	RPM	BHP	RPM	BHP	RPM	BHP	RPM	BHP	RPM	BHP	RPM	BHP	RPM	BHP	RPM	BHP
2250	1136	0.92	1171	1.01	1205	1.1	1237	1.18	1269	1.27	1300	1.37	1329	1.46	1358	1.55	1386	1.65	1414	1.75
2400	1160	0.99	1195	1.07	1228	1.17	1260	1.26	1292	1.35	1322	1.44	1352	1.54	1380	1.64	1408	1.74	1436	1.84
2550	1184	1.05	1219	1.14	1252	1.24	1284	1.33	1315	1.43	1345	1.53	1374	1.63	1403	1.73	1431	1.83	1458	1.93
2700	1209	1.12	1243	1.22	1276	1.31	1308	1.41	1339	1.51	1369	1.61	1398	1.72	1426	1.82	1454	1.92	1481	2.03

Table 132. Evaporator fan performance - 7.5 ton (model DSK, DHK), downflow, high heat (continued)

Available External Static Pressure (Inches of Water Gauge)																				
	1.10		1.20		1.30		1.40		1.50		1.60		1.70		1.80		1.90		2.00	
CFM	RPM	BHP	RPM	BHP	RPM	BHP	RPM	BHP	RPM	BHP	RPM	BHP	RPM	BHP	RPM	BHP	RPM	BHP	RPM	BHP
2850	1234	1.19	1267	1.29	1300	1.39	1332	1.5	1362	1.6	1392	1.7	1421	1.81	1449	1.92	1477	2.02	1504	2.13
3000	1260	1.27	1293	1.37	1325	1.48	1356	1.58	1387	1.69	1416	1.8	1445	1.91	1473	2.02	1500	2.13	1527	2.24
3150	1286	1.35	1319	1.46	1350	1.57	1381	1.67	1411	1.78	1441	1.89	1469	2.01	1497	2.12	1524	2.24	1551	2.35
3300	1313	1.44	1345	1.55	1377	1.66	1407	1.77	1436	1.88	1465	2	1494	2.11	1521	2.23	1548	2.35	1575	2.47
3600	1368	1.62	1400	1.74	1430	1.85	1460	1.97	1488	2.09	1516	2.22	1544	2.34	1570	2.46	1597	2.59	1623	2.71

Notes:

1. Available External Static Pressure is the static pressure difference between the return duct and the supply duct plus the static pressure drop caused by accessories and options.
2. For direct drive evaporator fan speed (rpm), refer to the applicable table in the fan performance section.
3. Data includes pressure drop due to standard filters and wet coils. No accessories or options are included in pressure drop data.
4. To determine static pressure drop due to other options/accessories, refer to the applicable table in the fan performance section.
5. Direct drive fan motor heat is negligible.
6. Factory supplied motors, in commercial equipment, are definite purpose motors, specifically designed and tested to operate reliably and continuously at all cataloged conditions. Using the full horsepower range of our fan motors as shown in our tabular data will not result in nuisance tripping or premature motor failure. Our product's warranty will not be affected.

Table 133. Evaporator fan performance - 8.5 ton (model DSK, DHK), downflow, high heat

Available External Static Pressure (Inches of Water Gauge)																				
	0.10		0.20		0.30		0.40		0.50		0.60		0.70		0.80		0.90		1.00	
CFM	RPM	BHP	RPM	BHP	RPM	BHP	RPM	BHP	RPM	BHP	RPM	BHP	RPM	BHP	RPM	BHP	RPM	BHP	RPM	BHP
2550	750	0.25	801	0.31	850	0.38	898	0.45	945	0.53	990	0.61	1033	0.70	1073	0.79	1111	0.87	1149	0.96
2720	793	0.29	841	0.36	888	0.43	934	0.51	977	0.59	1022	0.67	1064	0.76	1103	0.85	1141	0.94	1177	1.04
2890	836	0.34	883	0.41	927	0.49	970	0.57	1012	0.65	1053	0.74	1095	0.83	1134	0.92	1171	1.02	1207	1.12
3060	880	0.39	924	0.47	967	0.55	1008	0.63	1048	0.72	1087	0.81	1126	0.90	1165	1.00	1202	1.10	1237	1.20
3230	924	0.45	966	0.53	1007	0.62	1046	0.70	1084	0.79	1122	0.88	1158	0.98	1196	1.08	1233	1.18	1267	1.29
3400	968	0.52	1009	0.60	1047	0.69	1085	0.78	1122	0.87	1158	0.97	1194	1.07	1228	1.17	1264	1.28	1298	1.38
3570	1013	0.59	1051	0.68	1089	0.77	1125	0.87	1160	0.96	1194	1.06	1229	1.16	1263	1.26	1296	1.37	1330	1.48
3740	1057	0.67	1094	0.76	1130	0.86	1165	0.96	1199	1.06	1232	1.16	1265	1.26	1298	1.37	1330	1.48	1362	1.59
4080	1147	0.85	1181	0.95	1214	1.06	1247	1.16	1278	1.27	1310	1.38	1340	1.49	1370	1.60	1401	1.72	1430	1.83
Available External Static Pressure (Inches of Water Gauge)																				
	1.10		1.20		1.30		1.40		1.50		1.60		1.70		1.80		1.90		2.00	
CFM	RPM	BHP	RPM	BHP	RPM	BHP	RPM	BHP	RPM	BHP	RPM	BHP	RPM	BHP	RPM	BHP	RPM	BHP	RPM	BHP
2550	1184	1.05	1219	1.14	1252	1.24	1284	1.33	1315	1.43	1345	1.53	1374	1.63	1403	1.73	1431	1.83	1458	1.93
2720	1212	1.13	1246	1.23	1279	1.32	1311	1.42	1342	1.52	1372	1.62	1401	1.73	1429	1.83	1457	1.94	1484	2.04
2890	1241	1.21	1274	1.31	1307	1.42	1338	1.52	1369	1.62	1399	1.73	1428	1.83	1456	1.94	1483	2.05	1510	2.16
3060	1271	1.3	1303	1.41	1335	1.51	1366	1.62	1396	1.73	1426	1.84	1455	1.95	1483	2.06	1510	2.17	1537	2.28
3230	1301	1.4	1333	1.5	1364	1.61	1394	1.72	1424	1.84	1454	1.95	1482	2.06	1510	2.18	1537	2.29	1564	2.41
3400	1331	1.49	1363	1.61	1394	1.72	1424	1.84	1453	1.95	1482	2.07	1510	2.19	1538	2.31	1564	2.43	1591	2.55
3570	1362	1.6	1394	1.72	1425	1.83	1454	1.95	1483	2.07	1511	2.19	1538	2.32	1565	2.44	1592	2.56	1618	2.69
3740	1394	1.71	1425	1.83	1455	1.95	1485	2.07	1513	2.2	1541	2.32	1568	2.45	1595	2.58	1620	2.71	1646	2.84
4080	1459	1.95	1488	2.08	1518	2.21	1547	2.34	1575	2.47	1602	2.6	1629	2.74	1655	2.87	1680	3.01	-	-

Notes:

1. Available External Static Pressure is the static pressure difference between the return duct and the supply duct plus the static pressure drop caused by accessories and options.
2. For direct drive evaporator fan speed (rpm), refer to the applicable table in the fan performance section.
3. Data includes pressure drop due to standard filters and wet coils. No accessories or options are included in pressure drop data.
4. To determine static pressure drop due to other options/accessories, refer to the applicable table in the fan performance section.
5. Direct drive fan motor heat is negligible.
6. Factory supplied motors, in commercial equipment, are definite purpose motors, specifically designed and tested to operate reliably and continuously at all cataloged conditions. Using the full horsepower range of our fan motors as shown in our tabular data will not result in nuisance tripping or premature motor failure. Our product's warranty will not be affected.

Evaporator Fan Performance — Dual Fuel

Table 134. Evaporator fan performance - 10 ton (model DSK, DHK), downflow, high heat

Available External Static Pressure (Inches of Water Gauge)																				
	0.10		0.20		0.30		0.40		0.50		0.60		0.70		0.80		0.90		1.00	
CFM	RPM	BHP	RPM	BHP	RPM	BHP	RPM	BHP	RPM	BHP	RPM	BHP	RPM	BHP	RPM	BHP	RPM	BHP	RPM	BHP
3000	810	0.31	851	0.38	892	0.45	931	0.52	968	0.59	1003	0.67	1036	0.75	1068	0.83	1101	0.91	1132	0.99
3200	858	0.37	897	0.44	936	0.51	973	0.59	1009	0.67	1043	0.75	1075	0.83	1106	0.91	1136	0.99	1167	1.08
3400	907	0.43	944	0.50	981	0.58	1016	0.66	1051	0.74	1084	0.83	1115	0.91	1145	1.00	1174	1.09	1203	1.18
3600	955	0.50	991	0.58	1026	0.66	1060	0.74	1093	0.83	1125	0.92	1156	1.01	1185	1.10	1214	1.19	1241	1.28
3800	1004	0.58	1039	0.66	1071	0.75	1104	0.83	1136	0.92	1167	1.02	1197	1.11	1226	1.21	1254	1.30	1280	1.40
4000	1054	0.67	1087	0.75	1118	0.84	1149	0.93	1180	1.03	1209	1.12	1238	1.22	1267	1.32	1294	1.42	1320	1.52
4200	1103	0.76	1135	0.85	1165	0.95	1194	1.04	1224	1.14	1252	1.24	1280	1.34	1308	1.44	1335	1.55	1361	1.65
4400	1153	0.87	1183	0.96	1212	1.06	1240	1.16	1269	1.26	1296	1.36	1323	1.47	1350	1.57	1376	1.68	1401	1.79
4600	1202	0.98	1231	1.08	1259	1.18	1286	1.28	1314	1.39	1341	1.50	1367	1.60	1392	1.71	1418	1.83	1442	1.94
4800	1252	1.11	1280	1.21	1307	1.31	1333	1.42	1359	1.53	1385	1.64	1411	1.75	1435	1.87	1460	1.98	1484	2.10
Available External Static Pressure (Inches of Water Gauge)																				
	1.10		1.20		1.30		1.40		1.50		1.60		1.70		1.80		1.90		2.00	
CFM	RPM	BHP	RPM	BHP	RPM	BHP	RPM	BHP	RPM	BHP	RPM	BHP	RPM	BHP	RPM	BHP	RPM	BHP	RPM	BHP
3000	1163	1.07	1192	1.16	1220	1.24	1247	1.33	1274	1.42	1302	1.51	1329	1.61	1356	1.7	1382	1.8	1407	1.89
3200	1197	1.17	1226	1.26	1253	1.35	1280	1.44	1306	1.53	1332	1.62	1357	1.72	1384	1.82	1409	1.92	1435	2.02
3400	1232	1.27	1260	1.36	1288	1.45	1314	1.55	1340	1.65	1365	1.74	1390	1.84	1414	1.94	1437	2.04	1462	2.14
3600	1268	1.38	1295	1.47	1322	1.57	1349	1.67	1374	1.77	1399	1.87	1423	1.97	1447	2.07	1470	2.18	1493	2.28
3800	1306	1.5	1332	1.59	1358	1.69	1384	1.8	1409	1.9	1433	2.01	1457	2.11	1481	2.22	1504	2.33	1526	2.43
4000	1346	1.62	1371	1.72	1395	1.83	1419	1.93	1444	2.04	1468	2.15	1492	2.26	1515	2.37	1538	2.48	1560	2.59
4200	1386	1.76	1410	1.86	1434	1.97	1457	2.08	1479	2.19	1503	2.3	1527	2.41	1550	2.53	1572	2.64	1594	2.76
4400	1426	1.9	1450	2.01	1473	2.12	1496	2.24	1518	2.35	1540	2.46	1562	2.58	1585	2.7	1607	2.82	1629	2.94
4600	1467	2.06	1490	2.17	1513	2.29	1536	2.4	1557	2.52	1579	2.64	1600	2.76	1620	2.88	1642	3	1664	3.12
4800	1508	2.22	1531	2.34	1554	2.46	1576	2.58	1597	2.7	1618	2.82	1639	2.95	1659	3.07	1679	3.19	1699	3.32

Notes:

1. Available External Static Pressure is the static pressure difference between the return duct and the supply duct plus the static pressure drop caused by accessories and options.
2. For direct drive evaporator fan speed (rpm), refer to the applicable table in the fan performance section.
3. Data includes pressure drop due to standard filters and wet coils. No accessories or options are included in pressure drop data.
4. To determine static pressure drop due to other options/accessories, refer to the applicable table in the fan performance section.
5. Direct drive fan motor heat is negligible.
6. Factory supplied motors, in commercial equipment, are definite purpose motors, specifically designed and tested to operate reliably and continuously at all cataloged conditions. Using the full horsepower range of our fan motors as shown in our tabular data will not result in nuisance tripping or premature motor failure. Our product's warranty will not be affected.

Table 135. Evaporator fan performance - 12.5 ton (model DSK, DHK), downflow, high heat

Available External Static Pressure (Inches of Water Gauge)																				
	0.10		0.20		0.30		0.40		0.50		0.60		0.70		0.80		0.90		1.00	
CFM	RPM	BHP	RPM	BHP	RPM	BHP	RPM	BHP	RPM	BHP	RPM	BHP	RPM	BHP	RPM	BHP	RPM	BHP	RPM	BHP
3750	558	0.21	619	0.30	674	0.39	724	0.49	771	0.60	815	0.71	859	0.82	901	0.94	940	1.06	977	1.18
4000	586	0.24	645	0.33	698	0.44	747	0.54	793	0.65	835	0.76	876	0.88	918	1.00	957	1.13	994	1.25
4500	645	0.31	699	0.42	749	0.53	795	0.64	838	0.76	879	0.88	918	1.01	955	1.13	991	1.27	1028	1.41
5000	704	0.40	755	0.52	801	0.64	845	0.76	885	0.89	924	1.02	962	1.16	997	1.29	1032	1.43	1065	1.57
5500	765	0.51	811	0.63	855	0.77	896	0.90	935	1.04	972	1.18	1008	1.32	1042	1.47	1075	1.62	1107	1.77
6000	827	0.63	869	0.77	910	0.91	950	1.06	986	1.20	1022	1.36	1056	1.51	1089	1.67	1121	1.82	1152	1.99
Available External Static Pressure (Inches of Water Gauge)																				
	1.10		1.20		1.30		1.40		1.50		1.60		1.70		1.80		1.90		2.00	
CFM	RPM	BHP	RPM	BHP	RPM	BHP	RPM	BHP	RPM	BHP	RPM	BHP	RPM	BHP	RPM	BHP	RPM	BHP	RPM	BHP
3750	1013	1.32	1048	1.45	1081	1.59	1113	1.73	1144	1.87	1174	2.02	1203	2.17	1233	2.32	1261	2.47	1289	2.63
4000	1029	1.39	1063	1.52	1097	1.67	1129	1.81	1159	1.96	1189	2.11	1218	2.26	1247	2.42	1274	2.57	1302	2.73
4500	1063	1.55	1097	1.69	1129	1.84	1160	1.99	1191	2.14	1220	2.3	1249	2.46	1277	2.62	1305	2.79	1331	2.96
5000	1098	1.72	1131	1.87	1163	2.03	1194	2.19	1224	2.35	1253	2.51	1281	2.68	1309	2.85	1336	3.02	1363	3.2

Table 135. Evaporator fan performance - 12.5 ton (model DSK, DHK), downflow, high heat (continued)

	Available External Static Pressure (Inches of Water Gauge)																			
	1.10		1.20		1.30		1.40		1.50		1.60		1.70		1.80		1.90		2.00	
CFM	RPM	BHP	RPM	BHP	RPM	BHP	RPM	BHP	RPM	BHP	RPM	BHP	RPM	BHP	RPM	BHP	RPM	BHP	RPM	BHP
5500	1138	1.92	1168	2.08	1198	2.24	1228	2.41	1258	2.58	1287	2.75	1315	2.92	1342	3.1	1369	3.28	1395	3.46
6000	1182	2.15	1211	2.31	1239	2.48	1267	2.65	1294	2.82	1322	3	1349	3.19	1377	3.37	1403	3.56	1429	3.75

Notes:

1. Available External Static Pressure is the static pressure difference between the return duct and the supply duct plus the static pressure drop caused by accessories and options.
2. For direct drive evaporator fan speed (rpm), refer to the applicable table in the fan performance section.
3. Data includes pressure drop due to standard filters and wet coils. No accessories or options are included in pressure drop data.
4. To determine static pressure drop due to other options/accessories, refer to the applicable table in the fan performance section.
5. Direct drive fan motor heat is negligible.
6. Factory supplied motors, in commercial equipment, are definite purpose motors, specifically designed and tested to operate reliably and continuously at all cataloged conditions. Using the full horsepower range of our fan motors as shown in our tabular data will not result in nuisance tripping or premature motor failure. Our product's warranty will not be affected.

Table 136. Evaporator fan performance - 15 ton (model DSK, DHK), downflow, high heat

	Available External Static Pressure (Inches of Water Gauge)																			
	0.10		0.20		0.30		0.40		0.50		0.60		0.70		0.80		0.90		1.00	
CFM	RPM	BHP	RPM	BHP	RPM	BHP	RPM	BHP	RPM	BHP	RPM	BHP	RPM	BHP	RPM	BHP	RPM	BHP	RPM	BHP
4500	645	0.31	699	0.42	749	0.53	795	0.64	838	0.76	879	0.88	918	1.01	955	1.13	991	1.27	1028	1.41
4800	680	0.36	732	0.48	780	0.59	824	0.71	866	0.84	906	0.96	944	1.09	980	1.23	1015	1.36	1049	1.50
5400	753	0.48	800	0.61	844	0.74	886	0.87	925	1.01	962	1.15	998	1.29	1033	1.43	1066	1.58	1099	1.73
6000	827	0.63	869	0.77	910	0.91	950	1.06	986	1.20	1022	1.36	1056	1.51	1089	1.67	1121	1.82	1152	1.99
6600	901	0.81	940	0.96	978	1.11	1015	1.27	1050	1.43	1083	1.59	1116	1.76	1147	1.93	1177	2.10	1207	2.27
7200	977	1.02	1011	1.18	1047	1.35	1082	1.52	1115	1.69	1147	1.87	1178	2.04	1208	2.22	1236	2.41	1265	2.59
	Available External Static Pressure (Inches of Water Gauge)																			
	1.10		1.20		1.30		1.40		1.50		1.60		1.70		1.80		1.90		2.00	
CFM	RPM	BHP	RPM	BHP	RPM	BHP	RPM	BHP	RPM	BHP	RPM	BHP	RPM	BHP	RPM	BHP	RPM	BHP	RPM	BHP
4500	1063	1.55	1097	1.69	1129	1.84	1160	1.99	1191	2.14	1220	2.3	1249	2.46	1277	2.62	1305	2.79	1331	2.96
4800	1084	1.65	1117	1.8	1149	1.95	1180	2.1	1210	2.26	1240	2.42	1268	2.59	1296	2.75	1323	2.93	1350	3.1
5400	1130	1.88	1160	2.04	1191	2.2	1222	2.36	1251	2.53	1280	2.7	1308	2.87	1336	3.05	1362	3.22	1388	3.4
6000	1182	2.15	1211	2.31	1239	2.48	1267	2.65	1294	2.82	1322	3	1349	3.19	1377	3.37	1403	3.56	1429	3.75
6600	1236	2.45	1264	2.62	1292	2.8	1318	2.99	1344	3.17	1370	3.35	1395	3.54	1419	3.73	1445	3.93	1470	4.13
7200	1292	2.78	1319	2.97	1346	3.16	1372	3.35	1397	3.55	1422	3.74	1446	3.94	1470	4.14	1494	4.35	1517	4.55

Notes:

1. Available External Static Pressure is the static pressure difference between the return duct and the supply duct plus the static pressure drop caused by accessories and options.
2. For direct drive evaporator fan speed (rpm), refer to the applicable table in the fan performance section.
3. Data includes pressure drop due to standard filters and wet coils. No accessories or options are included in pressure drop data.
4. To determine static pressure drop due to other options/accessories, refer to the applicable table in the fan performance section.
5. Direct drive fan motor heat is negligible.
6. Factory supplied motors, in commercial equipment, are definite purpose motors, specifically designed and tested to operate reliably and continuously at all cataloged conditions. Using the full horsepower range of our fan motors as shown in our tabular data will not result in nuisance tripping or premature motor failure. Our product's warranty will not be affected.

Table 137. Evaporator fan performance - 17.5 ton (model DSK, DHK), downflow, high heat

	Available External Static Pressure (Inches of Water Gauge)																			
	0.10		0.20		0.30		0.40		0.50		0.60		0.70		0.80		0.90		1.00	
CFM	RPM	BHP	RPM	BHP	RPM	BHP	RPM	BHP	RPM	BHP	RPM	BHP	RPM	BHP	RPM	BHP	RPM	BHP	RPM	BHP
5250	734	0.45	783	0.57	828	0.70	870	0.83	910	0.96	948	1.10	985	1.24	1020	1.38	1053	1.52	1086	1.67
5600	777	0.53	822	0.66	866	0.79	907	0.93	945	1.07	982	1.21	1017	1.36	1051	1.51	1084	1.66	1116	1.81
6300	864	0.72	904	0.86	944	1.01	982	1.16	1018	1.31	1052	1.47	1085	1.63	1118	1.79	1149	1.96	1179	2.12
7000	951	0.95	987	1.11	1024	1.27	1059	1.43	1093	1.60	1126	1.77	1157	1.95	1187	2.12	1216	2.30	1245	2.48
7700	1039	1.23	1072	1.40	1106	1.57	1138	1.75	1170	1.94	1201	2.12	1231	2.31	1259	2.50	1287	2.69	1314	2.89
8400	1128	1.56	1159	1.74	1189	1.93	1219	2.13	1249	2.32	1278	2.52	1306	2.73	1334	2.93	1360	3.14	1386	3.35

Table 137. Evaporator fan performance - 17.5 ton (model DSK, DHK), downflow, high heat (continued)

	Available External Static Pressure (Inches of Water Gauge)																			
	1.10		1.20		1.30		1.40		1.50		1.60		1.70		1.80		1.90		2.00	
CFM	RPM	BHP	RPM	BHP	RPM	BHP	RPM	BHP	RPM	BHP	RPM	BHP	RPM	BHP	RPM	BHP	RPM	BHP	RPM	BHP
5250	1117	1.82	1148	1.97	1180	2.13	1211	2.3	1241	2.46	1270	2.63	1298	2.8	1325	2.97	1352	3.14	1378	3.32
5600	1147	1.97	1177	2.13	1206	2.29	1235	2.45	1265	2.62	1294	2.8	1322	2.97	1349	3.15	1376	3.33	1402	3.51
6300	1209	2.29	1237	2.47	1265	2.64	1292	2.81	1319	2.99	1345	3.17	1370	3.36	1397	3.55	1424	3.74	1449	3.93
7000	1273	2.66	1301	2.85	1328	3.04	1354	3.23	1379	3.42	1404	3.61	1429	3.81	1453	4	1477	4.2	1500	4.4
7700	1341	3.09	1367	3.28	1393	3.48	1418	3.69	1443	3.89	1467	4.1	1491	4.31	1514	4.52	1537	4.73	1559	4.94
8400	1412	3.56	1436	3.77	1461	3.99	1485	4.2	1509	4.42	1532	4.64	1554	4.86	1577	5.09	1599	5.31	1621	5.54

Notes:

1. Available External Static Pressure is the static pressure difference between the return duct and the supply duct plus the static pressure drop caused by accessories and options.
2. For direct drive evaporator fan speed (rpm), refer to the applicable table in the fan performance section.
3. Data includes pressure drop due to standard filters and wet coils. No accessories or options are included in pressure drop data.
4. To determine static pressure drop due to other options/accessories, refer to the applicable table in the fan performance section.
5. Direct drive fan motor heat is negligible.
6. Factory supplied motors, in commercial equipment, are definite purpose motors, specifically designed and tested to operate reliably and continuously at all cataloged conditions. Using the full horsepower range of our fan motors as shown in our tabular data will not result in nuisance tripping or premature motor failure. Our product's warranty will not be affected.

Table 138. Evaporator fan performance - 20 ton (model DSK, DHK), downflow, high heat

	Available External Static Pressure (Inches of Water Gauge)																			
	0.10		0.20		0.30		0.40		0.50		0.60		0.70		0.80		0.90		1.00	
CFM	RPM	BHP	RPM	BHP	RPM	BHP	RPM	BHP	RPM	BHP	RPM	BHP	RPM	BHP	RPM	BHP	RPM	BHP	RPM	BHP
6000	808	0.58	848	0.71	888	0.85	927	0.98	964	1.12	999	1.27	1033	1.42	1066	1.57	1098	1.71	1128	1.87
6400	856	0.68	894	0.82	932	0.97	969	1.11	1004	1.26	1038	1.41	1071	1.57	1103	1.73	1134	1.88	1164	2.04
7200	954	0.94	989	1.09	1022	1.25	1056	1.41	1088	1.57	1119	1.74	1150	1.91	1180	2.08	1209	2.26	1238	2.43
8000	1052	1.25	1084	1.41	1114	1.58	1145	1.76	1175	1.94	1204	2.12	1232	2.31	1260	2.49	1288	2.69	1315	2.88
8800	1151	1.62	1180	1.80	1209	1.99	1236	2.18	1263	2.38	1291	2.58	1318	2.78	1344	2.98	1369	3.18	1394	3.39
9600	1251	2.07	1278	2.26	1304	2.46	1329	2.67	1354	2.88	1380	3.10	1405	3.31	1429	3.53	1453	3.75	1477	3.97
	Available External Static Pressure (Inches of Water Gauge)																			
	1.10		1.20		1.30		1.40		1.50		1.60		1.70		1.80		1.90		2.00	
CFM	RPM	BHP	RPM	BHP	RPM	BHP	RPM	BHP	RPM	BHP	RPM	BHP	RPM	BHP	RPM	BHP	RPM	BHP	RPM	BHP
6000	1157	2.02	1185	2.17	1213	2.32	1240	2.48	1267	2.64	1294	2.8	1321	2.96	1346	3.13	1371	3.3	1395	3.47
6400	1192	2.2	1220	2.36	1247	2.53	1274	2.69	1299	2.85	1324	3.02	1350	3.19	1376	3.36	1400	3.54	1424	3.71
7200	1265	2.61	1292	2.79	1318	2.97	1343	3.15	1368	3.33	1392	3.51	1416	3.69	1439	3.88	1462	4.06	1484	4.25
8000	1341	3.07	1367	3.27	1392	3.47	1416	3.67	1440	3.87	1464	4.06	1486	4.26	1509	4.47	1531	4.67	1552	4.87
8800	1419	3.6	1444	3.81	1468	4.03	1491	4.24	1514	4.46	1537	4.68	1559	4.9	1581	5.11	1602	5.33	1623	5.55
9600	1500	4.19	1523	4.42	1546	4.65	1569	4.88	1591	5.12	1613	5.35	1634	5.59	-	-	-	-	-	-

Notes:

1. Available External Static Pressure is the static pressure difference between the return duct and the supply duct plus the static pressure drop caused by accessories and options.
2. For direct drive evaporator fan speed (rpm), refer to the applicable table in the fan performance section.
3. Data includes pressure drop due to standard filters and wet coils. No accessories or options are included in pressure drop data.
4. To determine static pressure drop due to other options/accessories, refer to the applicable table in the fan performance section.
5. Direct drive fan motor heat is negligible.
6. Factory supplied motors, in commercial equipment, are definite purpose motors, specifically designed and tested to operate reliably and continuously at all cataloged conditions. Using the full horsepower range of our fan motors as shown in our tabular data will not result in nuisance tripping or premature motor failure. Our product's warranty will not be affected.

Table 139. Evaporator fan performance - 25 ton (model DSK, DHK), downflow, high heat

	Available External Static Pressure (Inches of Water Gauge)																			
	0.10		0.20		0.30		0.40		0.50		0.60		0.70		0.80		0.90		1.00	
CFM	RPM	BHP	RPM	BHP	RPM	BHP	RPM	BHP	RPM	BHP	RPM	BHP	RPM	BHP	RPM	BHP	RPM	BHP	RPM	BHP
7500	991	1.05	1024	1.20	1056	1.37	1089	1.53	1120	1.70	1151	1.87	1180	2.05	1210	2.23	1238	2.41	1266	2.59
8000	1052	1.25	1084	1.41	1114	1.58	1145	1.76	1175	1.94	1204	2.12	1232	2.31	1260	2.49	1288	2.69	1315	2.88
9000	1176	1.73	1205	1.91	1232	2.10	1259	2.30	1286	2.50	1313	2.70	1339	2.90	1365	3.11	1390	3.31	1414	3.52

Table 139. Evaporator fan performance - 25 ton (model DSK, DHK), downflow, high heat (continued)

Available External Static Pressure (Inches of Water Gauge)																				
	0.10		0.20		0.30		0.40		0.50		0.60		0.70		0.80		0.90		1.00	
CFM	RPM	BHP	RPM	BHP	RPM	BHP	RPM	BHP	RPM	BHP	RPM	BHP	RPM	BHP	RPM	BHP	RPM	BHP	RPM	BHP
10000	1301	2.32	1327	2.52	1352	2.73	1376	2.94	1400	3.16	1425	3.39	1449	3.61	1473	3.84	1496	4.07	1519	4.29
11000	1426	3.04	1450	3.26	1473	3.49	1495	3.72	1518	3.96	1539	4.20	1561	4.44	1584	4.69	1605	4.94	1627	5.19
12000	1551	3.90	1573	4.15	1595	4.39	1615	4.63	1636	4.89	1657	5.15	1676	5.41	1696	5.68	-	-	-	-
Available External Static Pressure (Inches of Water Gauge)																				
	1.10		1.20		1.30		1.40		1.50		1.60		1.70		1.80		1.90		2.00	
CFM	RPM	BHP	RPM	BHP	RPM	BHP	RPM	BHP	RPM	BHP	RPM	BHP	RPM	BHP	RPM	BHP	RPM	BHP	RPM	BHP
7500	1293	2.78	1320	2.97	1345	3.15	1371	3.34	1395	3.52	1419	3.71	1442	3.9	1465	4.09	1487	4.28	1509	4.47
8000	1341	3.07	1367	3.27	1392	3.47	1416	3.67	1440	3.87	1464	4.06	1486	4.26	1509	4.47	1531	4.67	1552	4.87
9000	1439	3.74	1463	3.96	1487	4.18	1510	4.4	1533	4.62	1556	4.84	1578	5.06	1599	5.29	1620	5.51	1641	5.73
10000	1542	4.52	1564	4.75	1586	4.99	1608	5.23	1630	5.47	1651	5.72	-	-	-	-	-	-	-	-
11000	1648	5.44	1669	5.69	-	-	-	-	-	-	-	-	-	-	-	-	-	-	-	-
12000	-	-	-	-	-	-	-	-	-	-	-	-	-	-	-	-	-	-	-	-

Notes:

1. Available External Static Pressure is the static pressure difference between the return duct and the supply duct plus the static pressure drop caused by accessories and options.
2. For direct drive evaporator fan speed (rpm), refer to the applicable table in the fan performance section.
3. Data includes pressure drop due to standard filters and wet coils. No accessories or options are included in pressure drop data.
4. To determine static pressure drop due to other options/accessories, refer to the applicable table in the fan performance section.
5. Direct drive fan motor heat is negligible.
6. Factory supplied motors, in commercial equipment, are definite purpose motors, specifically designed and tested to operate reliably and continuously at all cataloged conditions. Using the full horsepower range of our fan motors as shown in our tabular data will not result in nuisance tripping or premature motor failure. Our product's warranty will not be affected.

Table 140. Evaporator fan performance - 25 ton (model DSK, DHK), downflow, high heat, high static motor

Available External Static Pressure (Inches of Water Gauge)																				
	0.10		0.20		0.30		0.40		0.50		0.60		0.70		0.80		0.90		1.00	
CFM	RPM	BHP	RPM	BHP	RPM	BHP	RPM	BHP	RPM	BHP	RPM	BHP	RPM	BHP	RPM	BHP	RPM	BHP	RPM	BHP
7500	991	1.05	1024	1.20	1056	1.37	1089	1.53	1120	1.70	1151	1.87	1180	2.05	1210	2.23	1238	2.41	1266	2.59
8000	1052	1.25	1084	1.41	1114	1.58	1145	1.76	1175	1.94	1204	2.12	1232	2.31	1260	2.49	1288	2.69	1315	2.88
9000	1176	1.73	1205	1.91	1232	2.10	1259	2.30	1286	2.50	1313	2.70	1339	2.90	1365	3.11	1390	3.31	1414	3.52
10000	1301	2.32	1327	2.52	1352	2.73	1376	2.94	1400	3.16	1425	3.39	1449	3.61	1473	3.84	1496	4.07	1519	4.29
11000	1426	3.04	1450	3.26	1473	3.49	1495	3.72	1518	3.96	1539	4.20	1561	4.44	1584	4.69	1605	4.94	1627	5.19
12000	1551	3.90	1573	4.15	1595	4.39	1615	4.63	1636	4.89	1657	5.15	1676	5.41	1696	5.68	1714	5.81	1735	6.09
Available External Static Pressure (Inches of Water Gauge)																				
	1.10		1.20		1.30		1.40		1.50		1.60		1.70		1.80		1.90		2.00	
CFM	RPM	BHP	RPM	BHP	RPM	BHP	RPM	BHP	RPM	BHP	RPM	BHP	RPM	BHP	RPM	BHP	RPM	BHP	RPM	BHP
7500	1293	2.78	1320	2.97	1345	3.15	1371	3.34	1395	3.52	1419	3.71	1442	3.9	1465	4.09	1487	4.28	1509	4.47
8000	1341	3.07	1367	3.27	1392	3.47	1416	3.67	1440	3.87	1464	4.06	1486	4.26	1509	4.47	1531	4.67	1552	4.87
9000	1439	3.74	1463	3.96	1487	4.18	1510	4.4	1533	4.62	1556	4.84	1578	5.06	1599	5.29	1620	5.51	1641	5.73
10000	1542	4.52	1564	4.75	1586	4.99	1608	5.23	1630	5.47	1651	5.72	1670	5.86	1689	6.11	1709	6.35	1730	6.59
11000	1648	5.44	1669	5.69	1685	5.8	1706	6.06	1727	6.32	1746	6.6	1762	6.66	1779	6.93	1798	7.19	1819	7.45
12000	1754	6.36	1774	6.63	1784	6.61	1804	6.89	1824	7.17	1841	7.48	1854	7.46	1869	7.75	1887	8.03	-	-

Notes:

1. Available External Static Pressure is the static pressure difference between the return duct and the supply duct plus the static pressure drop caused by accessories and options.
2. For direct drive evaporator fan speed (rpm), refer to the applicable table in the fan performance section.
3. Data includes pressure drop due to standard filters and wet coils. No accessories or options are included in pressure drop data.
4. To determine static pressure drop due to other options/accessories, refer to the applicable table in the fan performance section.
5. Direct drive fan motor heat is negligible.
6. Factory supplied motors, in commercial equipment, are definite purpose motors, specifically designed and tested to operate reliably and continuously at all cataloged conditions. Using the full horsepower range of our fan motors as shown in our tabular data will not result in nuisance tripping or premature motor failure. Our product's warranty will not be affected.

6 to 25 Tons — Horizontal

Table 141. Evaporator fan performance - 6 ton (model DSK, DHK), horizontal, high heat

Available External Static Pressure (Inches of Water Gauge)																				
	0.10		0.20		0.30		0.40		0.50		0.60		0.70		0.80		0.90		1.00	
CFM	RPM	BHP	RPM	BHP	RPM	BHP	RPM	BHP	RPM	BHP	RPM	BHP	RPM	BHP	RPM	BHP	RPM	BHP	RPM	BHP
1800	625	0.16	679	0.20	727	0.25	771	0.30	816	0.36	859	0.41	898	0.47	935	0.53	971	0.59	1009	0.65
1920	660	0.18	711	0.23	758	0.28	800	0.34	842	0.39	883	0.45	922	0.51	959	0.57	994	0.63	1027	0.70
2040	695	0.21	743	0.27	789	0.32	830	0.37	869	0.43	909	0.49	947	0.55	984	0.62	1018	0.68	1051	0.75
2160	730	0.25	775	0.30	820	0.36	860	0.42	898	0.48	934	0.54	972	0.60	1008	0.67	1042	0.74	1075	0.81
2280	765	0.29	809	0.34	851	0.40	891	0.46	928	0.52	963	0.59	998	0.65	1033	0.72	1067	0.79	1100	0.86
2400	801	0.33	843	0.39	883	0.45	922	0.51	958	0.57	992	0.64	1025	0.71	1059	0.78	1092	0.85	1124	0.93
2520	836	0.37	877	0.43	916	0.50	953	0.56	989	0.63	1022	0.70	1054	0.77	1084	0.84	1118	0.91	1149	0.99
2640	872	0.42	911	0.49	948	0.55	985	0.62	1020	0.69	1052	0.76	1084	0.83	1113	0.91	1143	0.98	1175	1.06
2760	908	0.48	946	0.54	981	0.61	1017	0.68	1051	0.76	1083	0.83	1114	0.90	1143	0.98	1171	1.06	1200	1.13
2880	944	0.54	981	0.61	1015	0.68	1049	0.75	1082	0.82	1114	0.90	1144	0.98	1173	1.06	1201	1.13	1227	1.21
Available External Static Pressure (Inches of Water Gauge)																				
	1.10		1.20		1.30		1.40		1.50		1.60		1.70		1.80		1.90		2.00	
CFM	RPM	BHP	RPM	BHP	RPM	BHP	RPM	BHP	RPM	BHP	RPM	BHP	RPM	BHP	RPM	BHP	RPM	BHP	RPM	BHP
1800	1045	0.72	1080	0.79	1113	0.86	1145	0.93	1176	1	1206	1.07	1235	1.15	1264	1.22	1292	1.3	1318	1.38
1920	1063	0.77	1098	0.84	1131	0.91	1163	0.98	1194	1.06	1224	1.13	1253	1.21	1281	1.29	1309	1.37	1335	1.45
2040	1083	0.82	1116	0.89	1149	0.96	1180	1.04	1211	1.12	1241	1.19	1270	1.27	1298	1.35	1326	1.43	1353	1.52
2160	1106	0.88	1137	0.95	1167	1.02	1198	1.1	1229	1.18	1259	1.26	1288	1.34	1316	1.42	1343	1.51	1370	1.59
2280	1131	0.94	1160	1.01	1189	1.09	1217	1.16	1247	1.24	1277	1.33	1306	1.41	1334	1.5	1361	1.58	1388	1.67
2400	1155	1	1185	1.08	1213	1.16	1241	1.23	1268	1.31	1295	1.4	1324	1.48	1351	1.57	1379	1.66	1405	1.75
2520	1180	1.07	1209	1.15	1237	1.23	1265	1.31	1292	1.39	1317	1.48	1343	1.56	1370	1.65	1397	1.74	1423	1.83
2640	1205	1.14	1234	1.22	1262	1.31	1289	1.39	1316	1.48	1341	1.56	1366	1.65	1391	1.74	1415	1.82	1441	1.92
2760	1230	1.22	1259	1.3	1287	1.39	1314	1.48	1340	1.56	1366	1.65	1390	1.74	1415	1.83	1438	1.92	1462	2.01
2880	1256	1.3	1284	1.39	1312	1.48	1339	1.56	1365	1.65	1390	1.75	1415	1.84	1439	1.93	1462	2.02	1485	2.12

Notes:

1. Available External Static Pressure is the static pressure difference between the return duct and the supply duct plus the static pressure drop caused by accessories and options.
2. For direct drive evaporator fan speed (rpm), refer to the applicable table in the fan performance section.
3. Data includes pressure drop due to standard filters and wet coils. No accessories or options are included in pressure drop data.
4. To determine static pressure drop due to other options/accessories, refer to the applicable table in the fan performance section.
5. Direct drive fan motor heat is negligible.
6. Factory supplied motors, in commercial equipment, are definite purpose motors, specifically designed and tested to operate reliably and continuously at all cataloged conditions. Using the full horsepower range of our fan motors as shown in our tabular data will not result in nuisance tripping or premature motor failure. Our product's warranty will not be affected.

Table 142. Evaporator fan performance - 7.5 ton (model DSK, DHK), horizontal, high heat

Available External Static Pressure (Inches of Water Gauge)																				
	0.10		0.20		0.30		0.40		0.50		0.60		0.70		0.80		0.90		1.00	
CFM	RPM	BHP	RPM	BHP	RPM	BHP	RPM	BHP	RPM	BHP	RPM	BHP	RPM	BHP	RPM	BHP	RPM	BHP	RPM	BHP
2250	700	0.21	746	0.27	791	0.32	834	0.38	874	0.44	912	0.50	947	0.56	983	0.62	1019	0.69	1053	0.76
2400	740	0.25	784	0.31	827	0.36	867	0.42	907	0.48	944	0.55	979	0.61	1012	0.68	1045	0.75	1079	0.82
2550	781	0.30	823	0.35	863	0.41	902	0.47	940	0.54	976	0.61	1010	0.67	1043	0.74	1074	0.81	1105	0.89
2700	822	0.34	862	0.40	900	0.47	937	0.53	973	0.60	1009	0.67	1043	0.74	1075	0.81	1105	0.88	1135	0.96
2850	864	0.40	901	0.46	937	0.52	974	0.59	1008	0.66	1042	0.73	1075	0.81	1107	0.88	1137	0.96	1166	1.04
3000	905	0.46	941	0.52	976	0.59	1010	0.66	1044	0.73	1076	0.81	1108	0.88	1139	0.96	1169	1.04	1197	1.12
3150	947	0.52	981	0.59	1015	0.66	1047	0.73	1080	0.81	1111	0.88	1142	0.96	1172	1.05	1201	1.13	1229	1.21
3300	989	0.59	1021	0.66	1054	0.74	1084	0.81	1116	0.89	1146	0.97	1175	1.05	1205	1.13	1234	1.22	1262	1.31
3600	1073	0.76	1103	0.83	1133	0.91	1162	0.99	1190	1.08	1219	1.16	1247	1.25	1274	1.33	1301	1.42	1328	1.52

Table 142. Evaporator fan performance - 7.5 ton (model DSK, DHK), horizontal, high heat (continued)

	Available External Static Pressure (Inches of Water Gauge)																			
	1.10		1.20		1.30		1.40		1.50		1.60		1.70		1.80		1.90		2.00	
CFM	RPM	BHP	RPM	BHP	RPM	BHP	RPM	BHP	RPM	BHP	RPM	BHP	RPM	BHP	RPM	BHP	RPM	BHP	RPM	BHP
2250	1086	0.83	1118	0.91	1148	0.98	1178	1.05	1206	1.13	1237	1.21	1266	1.29	1295	1.37	1323	1.46	1351	1.54
2400	1112	0.9	1143	0.97	1173	1.05	1202	1.13	1231	1.2	1258	1.28	1285	1.37	1313	1.45	1341	1.54	1369	1.63
2550	1137	0.96	1168	1.04	1198	1.12	1227	1.2	1256	1.28	1283	1.37	1309	1.45	1335	1.54	1360	1.62	1387	1.71
2700	1163	1.04	1194	1.12	1224	1.2	1253	1.28	1281	1.37	1308	1.45	1334	1.54	1360	1.63	1385	1.72	1409	1.81
2850	1194	1.12	1221	1.2	1250	1.28	1279	1.37	1306	1.46	1333	1.54	1359	1.63	1385	1.73	1410	1.82	1434	1.91
3000	1225	1.2	1252	1.29	1278	1.37	1305	1.46	1332	1.55	1359	1.64	1385	1.73	1410	1.83	1435	1.92	1459	2.02
3150	1257	1.3	1283	1.38	1309	1.47	1333	1.56	1358	1.65	1385	1.74	1410	1.84	1436	1.93	1460	2.03	1484	2.13
3300	1289	1.4	1315	1.48	1340	1.57	1364	1.66	1388	1.76	1412	1.85	1437	1.95	1462	2.05	1486	2.15	1510	2.25
3600	1354	1.61	1379	1.71	1404	1.8	1428	1.9	1451	2	1474	2.1	1496	2.19	1518	2.29	1539	2.4	1562	2.5

Notes:

1. Available External Static Pressure is the static pressure difference between the return duct and the supply duct plus the static pressure drop caused by accessories and options.
2. For direct drive evaporator fan speed (rpm), refer to the applicable table in the fan performance section.
3. Data includes pressure drop due to standard filters and wet coils. No accessories or options are included in pressure drop data.
4. To determine static pressure drop due to other options/accessories, refer to the applicable table in the fan performance section.
5. Direct drive fan motor heat is negligible.
6. Factory supplied motors, in commercial equipment, are definite purpose motors, specifically designed and tested to operate reliably and continuously at all cataloged conditions. Using the full horsepower range of our fan motors as shown in our tabular data will not result in nuisance tripping or premature motor failure. Our product's warranty will not be affected.

Table 143. Evaporator fan performance - 8.5 ton (model DSK, DHK), horizontal, high heat

	Available External Static Pressure (Inches of Water Gauge)																			
	0.10		0.20		0.30		0.40		0.50		0.60		0.70		0.80		0.90		1.00	
CFM	RPM	BHP	RPM	BHP	RPM	BHP	RPM	BHP	RPM	BHP	RPM	BHP	RPM	BHP	RPM	BHP	RPM	BHP	RPM	BHP
2550	781	0.30	823	0.35	863	0.41	902	0.47	940	0.54	976	0.61	1010	0.67	1043	0.74	1074	0.81	1105	0.89
2720	828	0.35	867	0.41	905	0.47	942	0.54	978	0.60	1013	0.68	1047	0.75	1079	0.82	1109	0.89	1139	0.97
2890	875	0.41	912	0.48	947	0.54	983	0.61	1017	0.68	1051	0.75	1084	0.83	1115	0.90	1145	0.98	1174	1.06
3060	922	0.48	957	0.55	991	0.62	1025	0.69	1058	0.76	1089	0.84	1121	0.91	1152	0.99	1182	1.08	1210	1.16
3230	970	0.56	1003	0.63	1035	0.70	1067	0.77	1099	0.85	1130	0.93	1160	1.01	1190	1.09	1219	1.18	1247	1.26
3400	1017	0.64	1048	0.72	1080	0.79	1110	0.87	1141	0.95	1171	1.03	1199	1.11	1228	1.20	1256	1.29	1284	1.37
3570	1065	0.74	1094	0.81	1125	0.89	1154	0.97	1183	1.06	1212	1.14	1240	1.23	1267	1.31	1294	1.40	1321	1.50
3740	1113	0.84	1141	0.92	1170	1.00	1198	1.09	1225	1.17	1253	1.26	1281	1.35	1307	1.44	1332	1.53	1359	1.63
4080	1209	1.08	1235	1.16	1261	1.25	1288	1.34	1313	1.43	1338	1.52	1364	1.62	1389	1.72	1413	1.82	1437	1.91
	Available External Static Pressure (Inches of Water Gauge)																			
	1.10		1.20		1.30		1.40		1.50		1.60		1.70		1.80		1.90		2.00	
CFM	RPM	BHP	RPM	BHP	RPM	BHP	RPM	BHP	RPM	BHP	RPM	BHP	RPM	BHP	RPM	BHP	RPM	BHP	RPM	BHP
2550	1137	0.96	1168	1.04	1198	1.12	1227	1.2	1256	1.28	1283	1.37	1309	1.45	1335	1.54	1360	1.62	1387	1.71
2720	1167	1.05	1198	1.13	1227	1.21	1256	1.29	1284	1.38	1311	1.47	1338	1.55	1363	1.64	1388	1.73	1413	1.82
2890	1202	1.14	1229	1.22	1257	1.3	1285	1.39	1313	1.48	1340	1.57	1366	1.66	1392	1.75	1416	1.84	1441	1.94
3060	1238	1.24	1264	1.32	1290	1.41	1315	1.49	1342	1.59	1369	1.68	1395	1.77	1420	1.87	1445	1.97	1469	2.06
3230	1274	1.35	1300	1.44	1325	1.52	1350	1.61	1374	1.7	1399	1.8	1424	1.89	1449	1.99	1474	2.09	1498	2.19
3400	1310	1.46	1336	1.56	1361	1.65	1385	1.74	1409	1.83	1432	1.93	1455	2.02	1479	2.12	1503	2.23	1527	2.33
3570	1347	1.59	1372	1.68	1397	1.78	1421	1.88	1445	1.97	1467	2.07	1490	2.17	1512	2.27	1533	2.37	1556	2.48
3740	1385	1.72	1409	1.82	1434	1.92	1457	2.02	1481	2.12	1503	2.22	1525	2.32	1547	2.43	1568	2.53	1589	2.63

Table 143. Evaporator fan performance - 8.5 ton (model DSK, DHK), horizontal, high heat (continued)

Available External Static Pressure (Inches of Water Gauge)																				
	1.10		1.20		1.30		1.40		1.50		1.60		1.70		1.80		1.90		2.00	
CFM	RPM	BHP	RPM	BHP	RPM	BHP	RPM	BHP	RPM	BHP	RPM	BHP	RPM	BHP	RPM	BHP	RPM	BHP	RPM	BHP
4080	1461	2.01	1485	2.12	1508	2.23	1531	2.33	1554	2.44	1576	2.55	1597	2.66	1618	2.77	1639	2.88	1659	2.99

Notes:

1. Available External Static Pressure is the static pressure difference between the return duct and the supply duct plus the static pressure drop caused by accessories and options.
2. For direct drive evaporator fan speed (rpm), refer to the applicable table in the fan performance section.
3. Data includes pressure drop due to standard filters and wet coils. No accessories or options are included in pressure drop data.
4. To determine static pressure drop due to other options/accessories, refer to the applicable table in the fan performance section.
5. Direct drive fan motor heat is negligible.
6. Factory supplied motors, in commercial equipment, are definite purpose motors, specifically designed and tested to operate reliably and continuously at all cataloged conditions. Using the full horsepower range of our fan motors as shown in our tabular data will not result in nuisance tripping or premature motor failure. Our product's warranty will not be affected.

Table 144. Evaporator fan performance - 10 ton (model DSK, DHK), horizontal, high heat

Available External Static Pressure (Inches of Water Gauge)																				
	0.10		0.20		0.30		0.40		0.50		0.60		0.70		0.80		0.90		1.00	
CFM	RPM	BHP	RPM	BHP	RPM	BHP	RPM	BHP	RPM	BHP	RPM	BHP	RPM	BHP	RPM	BHP	RPM	BHP	RPM	BHP
3000	892	0.47	925	0.53	956	0.59	988	0.66	1018	0.73	1048	0.80	1078	0.88	1107	0.95	1135	1.03	1161	1.10
3200	947	0.56	979	0.62	1008	0.69	1038	0.76	1067	0.84	1095	0.91	1123	0.99	1151	1.07	1178	1.15	1204	1.22
3400	1003	0.66	1032	0.73	1061	0.80	1088	0.88	1116	0.95	1143	1.03	1169	1.11	1196	1.19	1222	1.28	1248	1.36
3600	1059	0.77	1086	0.85	1113	0.92	1139	1.00	1166	1.08	1192	1.16	1217	1.25	1241	1.33	1267	1.42	1292	1.51
3800	1115	0.90	1141	0.98	1167	1.06	1191	1.14	1216	1.22	1241	1.31	1266	1.40	1289	1.49	1312	1.57	1337	1.67
4000	1171	1.04	1195	1.12	1220	1.21	1244	1.29	1267	1.38	1291	1.47	1315	1.56	1338	1.65	1360	1.75	1382	1.84
4200	1227	1.20	1250	1.28	1274	1.37	1297	1.46	1319	1.55	1341	1.64	1364	1.74	1387	1.83	1408	1.93	1430	2.03
4400	1283	1.37	1305	1.46	1328	1.55	1350	1.64	1372	1.74	1393	1.83	1414	1.93	1436	2.03	1457	2.13	1478	2.23
4600	1340	1.55	1360	1.65	1383	1.74	1404	1.84	1425	1.94	1445	2.04	1465	2.14	1486	2.24	1507	2.35	1527	2.45
4800	1396	1.76	1416	1.85	1437	1.95	1458	2.06	1478	2.16	1498	2.26	1517	2.36	1536	2.47	1556	2.58	1576	2.69
Available External Static Pressure (Inches of Water Gauge)																				
	1.10		1.20		1.30		1.40		1.50		1.60		1.70		1.80		1.90		2.00	
CFM	RPM	BHP	RPM	BHP	RPM	BHP	RPM	BHP	RPM	BHP	RPM	BHP	RPM	BHP	RPM	BHP	RPM	BHP	RPM	BHP
3000	1187	1.18	1212	1.25	1236	1.33	1262	1.42	1287	1.5	1312	1.59	1337	1.67	1360	1.76	1384	1.85	1406	1.94
3200	1229	1.31	1254	1.39	1278	1.47	1301	1.55	1323	1.64	1347	1.72	1372	1.82	1395	1.91	1418	2	1441	2.09
3400	1272	1.44	1296	1.53	1320	1.62	1342	1.7	1364	1.79	1386	1.88	1407	1.97	1430	2.06	1453	2.16	1475	2.26
3600	1316	1.6	1340	1.68	1362	1.77	1385	1.87	1406	1.96	1428	2.05	1448	2.14	1469	2.24	1489	2.33	1510	2.43
3800	1360	1.76	1383	1.85	1406	1.95	1428	2.04	1449	2.14	1470	2.23	1490	2.33	1510	2.43	1530	2.53	1549	2.62
4000	1405	1.94	1428	2.03	1450	2.13	1471	2.23	1492	2.33	1513	2.43	1533	2.53	1553	2.63	1572	2.73	1591	2.84
4200	1450	2.13	1473	2.23	1494	2.33	1515	2.43	1536	2.54	1556	2.64	1576	2.75	1595	2.85	1614	2.96	1633	3.06
4400	1498	2.33	1518	2.44	1539	2.54	1560	2.65	1580	2.76	1600	2.87	1620	2.97	1639	3.08	1657	3.19	1676	3.3
4600	1547	2.56	1566	2.66	1585	2.77	1605	2.88	1625	2.99	1644	3.11	1664	3.22	1682	3.33	1701	3.45	1719	3.56
4800	1595	2.8	1614	2.91	1633	3.02	1651	3.13	1670	3.25	1689	3.36	1708	3.48	1727	3.6	1745	3.72	1763	3.83

Notes:

1. Available External Static Pressure is the static pressure difference between the return duct and the supply duct plus the static pressure drop caused by accessories and options.
2. For direct drive evaporator fan speed (rpm), refer to the applicable table in the fan performance section.
3. Data includes pressure drop due to standard filters and wet coils. No accessories or options are included in pressure drop data.
4. To determine static pressure drop due to other options/accessories, refer to the applicable table in the fan performance section.
5. Direct drive fan motor heat is negligible.
6. Factory supplied motors, in commercial equipment, are definite purpose motors, specifically designed and tested to operate reliably and continuously at all cataloged conditions. Using the full horsepower range of our fan motors as shown in our tabular data will not result in nuisance tripping or premature motor failure. Our product's warranty will not be affected.

Table 145. Evaporator fan performance - 12.5 ton (model DSK, DHK), horizontal, high heat

Available External Static Pressure (Inches of Water Gauge)																				
	0.10		0.20		0.30		0.40		0.50		0.60		0.70		0.80		0.90		1.00	
CFM	RPM	BHP	RPM	BHP	RPM	BHP	RPM	BHP	RPM	BHP	RPM	BHP	RPM	BHP	RPM	BHP	RPM	BHP	RPM	BHP
3750	572	0.23	629	0.32	683	0.41	734	0.51	779	0.61	822	0.71	864	0.82	903	0.94	941	1.05	977	1.17
4000	603	0.27	656	0.36	708	0.46	757	0.56	802	0.67	844	0.77	884	0.89	922	1.00	960	1.13	995	1.25
4500	666	0.36	713	0.45	760	0.56	805	0.67	849	0.79	890	0.91	928	1.03	964	1.15	999	1.28	1034	1.41
5000	730	0.47	772	0.57	815	0.68	857	0.80	897	0.93	937	1.06	974	1.20	1009	1.33	1042	1.46	1075	1.60
5500	795	0.60	833	0.71	872	0.83	911	0.96	949	1.09	985	1.23	1021	1.38	1056	1.52	1089	1.67	1120	1.81
6000	861	0.75	896	0.88	931	1.00	966	1.14	1002	1.28	1037	1.43	1070	1.58	1103	1.73	1136	1.89	1167	2.05
Available External Static Pressure (Inches of Water Gauge)																				
	1.10		1.20		1.30		1.40		1.50		1.60		1.70		1.80		1.90		2.00	
CFM	RPM	BHP	RPM	BHP	RPM	BHP	RPM	BHP	RPM	BHP	RPM	BHP	RPM	BHP	RPM	BHP	RPM	BHP	RPM	BHP
3750	1011	1.3	1043	1.42	1074	1.54	1104	1.67	1133	1.8	1161	1.93	1188	2.06	1214	2.19	1240	2.33	1265	2.47
4000	1029	1.38	1062	1.5	1093	1.64	1123	1.77	1152	1.9	1179	2.03	1206	2.17	1233	2.31	1258	2.45	1283	2.59
4500	1067	1.55	1099	1.69	1130	1.83	1160	1.97	1189	2.12	1217	2.26	1244	2.41	1270	2.56	1296	2.71	1321	2.86
5000	1107	1.74	1138	1.89	1168	2.04	1198	2.19	1227	2.34	1254	2.5	1282	2.66	1308	2.82	1334	2.98	1359	3.14
5500	1150	1.96	1180	2.11	1209	2.27	1237	2.43	1265	2.59	1293	2.76	1319	2.92	1345	3.09	1371	3.26	1396	3.44
6000	1196	2.21	1225	2.37	1252	2.53	1280	2.7	1306	2.87	1333	3.04	1358	3.21	1384	3.39	1409	3.57	1434	3.75

Notes:

1. Available External Static Pressure is the static pressure difference between the return duct and the supply duct plus the static pressure drop caused by accessories and options.
2. For direct drive evaporator fan speed (rpm), refer to the applicable table in the fan performance section.
3. Data includes pressure drop due to standard filters and wet coils. No accessories or options are included in pressure drop data.
4. To determine static pressure drop due to other options/accessories, refer to the applicable table in the fan performance section.
5. Direct drive fan motor heat is negligible.
6. Factory supplied motors, in commercial equipment, are definite purpose motors, specifically designed and tested to operate reliably and continuously at all cataloged conditions. Using the full horsepower range of our fan motors as shown in our tabular data will not result in nuisance tripping or premature motor failure. Our product's warranty will not be affected.

Table 146. Evaporator fan performance - 15 ton (model DSK, DHK), horizontal, high heat

Available External Static Pressure (Inches of Water Gauge)																				
	0.10		0.20		0.30		0.40		0.50		0.60		0.70		0.80		0.90		1.00	
CFM	RPM	BHP	RPM	BHP	RPM	BHP	RPM	BHP	RPM	BHP	RPM	BHP	RPM	BHP	RPM	BHP	RPM	BHP	RPM	BHP
4500	666	0.36	713	0.45	760	0.56	805	0.67	849	0.79	890	0.91	928	1.03	964	1.15	999	1.28	1034	1.41
4800	705	0.42	749	0.52	793	0.63	836	0.75	878	0.87	918	1.00	955	1.13	991	1.25	1025	1.39	1058	1.52
5400	782	0.57	821	0.68	860	0.80	900	0.93	938	1.06	975	1.20	1012	1.34	1047	1.48	1079	1.62	1111	1.77
6000	861	0.75	896	0.88	931	1.00	966	1.14	1002	1.28	1037	1.43	1070	1.58	1103	1.73	1136	1.89	1167	2.05
6600	940	0.98	972	1.11	1003	1.24	1036	1.39	1068	1.54	1101	1.70	1132	1.86	1163	2.02	1193	2.19	1223	2.36
7200	1020	1.24	1050	1.38	1078	1.53	1108	1.68	1138	1.84	1167	2.01	1197	2.18	1226	2.35	1254	2.53	1282	2.71
Available External Static Pressure (Inches of Water Gauge)																				
	1.10		1.20		1.30		1.40		1.50		1.60		1.70		1.80		1.90		2.00	
CFM	RPM	BHP	RPM	BHP	RPM	BHP	RPM	BHP	RPM	BHP	RPM	BHP	RPM	BHP	RPM	BHP	RPM	BHP	RPM	BHP
4500	1067	1.55	1099	1.69	1130	1.83	1160	1.97	1189	2.12	1217	2.26	1244	2.41	1270	2.56	1296	2.71	1321	2.86
4800	1090	1.66	1122	1.81	1153	1.95	1183	2.1	1212	2.25	1240	2.4	1267	2.56	1293	2.71	1319	2.87	1343	3.03
5400	1141	1.91	1171	2.07	1200	2.22	1229	2.38	1257	2.54	1285	2.7	1312	2.87	1338	3.04	1363	3.21	1388	3.38
6000	1196	2.21	1225	2.37	1252	2.53	1280	2.7	1306	2.87	1333	3.04	1358	3.21	1384	3.39	1409	3.57	1434	3.75
6600	1252	2.54	1281	2.72	1308	2.89	1334	3.06	1359	3.24	1384	3.41	1409	3.6	1433	3.79	1457	3.98	1481	4.17

Table 146. Evaporator fan performance - 15 ton (model DSK, DHK), horizontal, high heat (continued)

	Available External Static Pressure (Inches of Water Gauge)																			
	1.10		1.20		1.30		1.40		1.50		1.60		1.70		1.80		1.90		2.00	
CFM	RPM	BHP	RPM	BHP	RPM	BHP	RPM	BHP	RPM	BHP	RPM	BHP	RPM	BHP	RPM	BHP	RPM	BHP	RPM	BHP
7200	1309	2.9	1337	3.09	1364	3.28	1390	3.47	1415	3.66	1439	3.85	1463	4.04	1486	4.23	1509	4.42	1532	4.63

Notes:

1. Available External Static Pressure is the static pressure difference between the return duct and the supply duct plus the static pressure drop caused by accessories and options.
2. For direct drive evaporator fan speed (rpm), refer to the applicable table in the fan performance section.
3. Data includes pressure drop due to standard filters and wet coils. No accessories or options are included in pressure drop data.
4. To determine static pressure drop due to other options/accessories, refer to the applicable table in the fan performance section.
5. Direct drive fan motor heat is negligible.
6. Factory supplied motors, in commercial equipment, are definite purpose motors, specifically designed and tested to operate reliably and continuously at all cataloged conditions. Using the full horsepower range of our fan motors as shown in our tabular data will not result in nuisance tripping or premature motor failure. Our product's warranty will not be affected.

Table 147. Evaporator fan performance - 17.5 ton (model DSK, DHK), horizontal, high heat

	Available External Static Pressure (Inches of Water Gauge)																			
	0.10		0.20		0.30		0.40		0.50		0.60		0.70		0.80		0.90		1.00	
CFM	RPM	BHP	RPM	BHP	RPM	BHP	RPM	BHP	RPM	BHP	RPM	BHP	RPM	BHP	RPM	BHP	RPM	BHP	RPM	BHP
5250	763	0.53	803	0.64	843	0.75	884	0.88	923	1.01	961	1.14	998	1.28	1033	1.42	1065	1.56	1097	1.70
5600	808	0.63	845	0.74	884	0.86	922	0.99	959	1.13	996	1.27	1031	1.41	1065	1.56	1098	1.71	1129	1.86
6300	900	0.86	934	0.99	967	1.12	1001	1.26	1035	1.41	1069	1.56	1101	1.71	1133	1.87	1164	2.04	1195	2.20
7000	994	1.15	1024	1.29	1053	1.43	1084	1.58	1114	1.74	1145	1.90	1175	2.07	1205	2.24	1234	2.41	1262	2.59
7700	1088	1.50	1115	1.65	1142	1.80	1168	1.96	1197	2.13	1224	2.30	1252	2.48	1280	2.66	1307	2.85	1334	3.04
8400	1182	1.91	1206	2.08	1232	2.25	1256	2.42	1281	2.59	1307	2.78	1332	2.96	1357	3.15	1383	3.35	1408	3.55
	Available External Static Pressure (Inches of Water Gauge)																			
	1.10		1.20		1.30		1.40		1.50		1.60		1.70		1.80		1.90		2.00	
CFM	RPM	BHP	RPM	BHP	RPM	BHP	RPM	BHP	RPM	BHP	RPM	BHP	RPM	BHP	RPM	BHP	RPM	BHP	RPM	BHP
5250	1128	1.85	1159	2	1188	2.15	1217	2.31	1246	2.46	1273	2.63	1300	2.79	1327	2.95	1352	3.12	1377	3.29
5600	1159	2.01	1189	2.16	1217	2.32	1245	2.48	1273	2.64	1300	2.81	1327	2.98	1353	3.15	1378	3.32	1403	3.5
6300	1224	2.37	1252	2.54	1280	2.7	1306	2.87	1332	3.04	1358	3.22	1383	3.4	1408	3.58	1432	3.77	1457	3.95
7000	1290	2.77	1318	2.96	1345	3.15	1371	3.33	1396	3.52	1421	3.7	1444	3.89	1468	4.07	1492	4.27	1515	4.47
7700	1360	3.23	1386	3.43	1411	3.63	1437	3.83	1462	4.04	1486	4.24	1510	4.45	1532	4.65	1555	4.85	1577	5.05
8400	1433	3.75	1457	3.96	1482	4.18	1505	4.39	1528	4.61	1552	4.83	1575	5.05	1598	5.28	1620	5.5	1642	5.72

Notes:

1. Available External Static Pressure is the static pressure difference between the return duct and the supply duct plus the static pressure drop caused by accessories and options.
2. For direct drive evaporator fan speed (rpm), refer to the applicable table in the fan performance section.
3. Data includes pressure drop due to standard filters and wet coils. No accessories or options are included in pressure drop data.
4. To determine static pressure drop due to other options/accessories, refer to the applicable table in the fan performance section.
5. Direct drive fan motor heat is negligible.
6. Factory supplied motors, in commercial equipment, are definite purpose motors, specifically designed and tested to operate reliably and continuously at all cataloged conditions. Using the full horsepower range of our fan motors as shown in our tabular data will not result in nuisance tripping or premature motor failure. Our product's warranty will not be affected.

Table 148. Evaporator fan performance - 20 ton (model DSK, DHK), horizontal, high heat

	Available External Static Pressure (Inches of Water Gauge)																			
	0.10		0.20		0.30		0.40		0.50		0.60		0.70		0.80		0.90		1.00	
CFM	RPM	BHP	RPM	BHP	RPM	BHP	RPM	BHP	RPM	BHP	RPM	BHP	RPM	BHP	RPM	BHP	RPM	BHP	RPM	BHP
6000	842	0.70	879	0.82	916	0.94	952	1.08	986	1.21	1019	1.35	1052	1.49	1082	1.64	1112	1.78	1140	1.92
6400	894	0.83	928	0.96	963	1.09	997	1.23	1030	1.37	1061	1.51	1093	1.66	1123	1.82	1152	1.97	1179	2.12
7200	997	1.14	1028	1.28	1058	1.43	1089	1.58	1120	1.74	1149	1.90	1178	2.06	1205	2.22	1233	2.39	1260	2.57
8000	1102	1.53	1129	1.69	1157	1.85	1183	2.01	1212	2.18	1240	2.35	1266	2.53	1292	2.71	1318	2.88	1343	3.07
8800	1207	2.00	1232	2.17	1257	2.35	1281	2.52	1306	2.71	1332	2.89	1357	3.08	1382	3.28	1406	3.47	1429	3.66
9600	1312	2.56	1335	2.75	1358	2.94	1381	3.13	1403	3.32	1426	3.52	1450	3.73	1473	3.94	1496	4.14	1518	4.35

Table 148. Evaporator fan performance - 20 ton (model DSK, DHK), horizontal, high heat (continued)

Available External Static Pressure (Inches of Water Gauge)																				
	1.10		1.20		1.30		1.40		1.50		1.60		1.70		1.80		1.90		2.00	
CFM	RPM	BHP	RPM	BHP	RPM	BHP	RPM	BHP	RPM	BHP	RPM	BHP	RPM	BHP	RPM	BHP	RPM	BHP	RPM	BHP
6000	1168	2.07	1195	2.21	1222	2.36	1249	2.52	1275	2.68	1301	2.84	1326	3	1352	3.17	1376	3.33	1401	3.5
6400	1206	2.27	1232	2.43	1258	2.58	1284	2.74	1308	2.9	1334	3.07	1359	3.24	1383	3.41	1407	3.58	1430	3.76
7200	1286	2.74	1311	2.91	1335	3.08	1359	3.25	1382	3.42	1405	3.6	1428	3.78	1450	3.95	1472	4.13	1495	4.32
8000	1368	3.26	1392	3.45	1415	3.65	1438	3.83	1460	4.02	1482	4.21	1503	4.4	1525	4.6	1546	4.79	1567	4.99
8800	1452	3.86	1474	4.06	1497	4.27	1520	4.48	1541	4.7	1563	4.91	1583	5.12	1604	5.32	1623	5.53	1643	5.74
9600	1540	4.57	1561	4.78	1582	4.99	1603	5.21	1624	5.44	1644	5.67	-	-	-	-	-	-	-	-

Notes:

1. Available External Static Pressure is the static pressure difference between the return duct and the supply duct plus the static pressure drop caused by accessories and options.
2. For direct drive evaporator fan speed (rpm), refer to the applicable table in the fan performance section.
3. Data includes pressure drop due to standard filters and wet coils. No accessories or options are included in pressure drop data.
4. To determine static pressure drop due to other options/accessories, refer to the applicable table in the fan performance section.
5. Direct drive fan motor heat is negligible.
6. Factory supplied motors, in commercial equipment, are definite purpose motors, specifically designed and tested to operate reliably and continuously at all cataloged conditions. Using the full horsepower range of our fan motors as shown in our tabular data will not result in nuisance tripping or premature motor failure. Our product's warranty will not be affected.

Table 149. Evaporator fan performance - 25 ton (model DSK, DHK), horizontal, high heat

Available External Static Pressure (Inches of Water Gauge)																				
	0.10		0.20		0.30		0.40		0.50		0.60		0.70		0.80		0.90		1.00	
CFM	RPM	BHP	RPM	BHP	RPM	BHP	RPM	BHP	RPM	BHP	RPM	BHP	RPM	BHP	RPM	BHP	RPM	BHP	RPM	BHP
7500	1036	1.28	1066	1.43	1095	1.58	1124	1.73	1154	1.90	1183	2.06	1211	2.22	1238	2.39	1264	2.57	1291	2.75
8000	1102	1.53	1129	1.69	1157	1.85	1183	2.01	1212	2.18	1240	2.35	1266	2.53	1292	2.71	1318	2.88	1343	3.07
9000	1233	2.13	1257	2.30	1282	2.48	1306	2.67	1330	2.85	1355	3.04	1380	3.24	1404	3.43	1428	3.63	1451	3.83
10000	1365	2.88	1387	3.07	1409	3.27	1431	3.47	1453	3.67	1473	3.87	1497	4.09	1519	4.30	1541	4.52	1563	4.74
11000	1497	3.78	1517	4.00	1537	4.21	1557	4.43	1577	4.65	1597	4.87	1616	5.10	1636	5.33	1657	5.56	-	-
12000	1629	4.87	1648	5.10	1666	5.33	1685	5.57	-	-	-	-	-	-	-	-	-	-	-	-
Available External Static Pressure (Inches of Water Gauge)																				
	1.10		1.20		1.30		1.40		1.50		1.60		1.70		1.80		1.90		2.00	
CFM	RPM	BHP	RPM	BHP	RPM	BHP	RPM	BHP	RPM	BHP	RPM	BHP	RPM	BHP	RPM	BHP	RPM	BHP	RPM	BHP
7500	1316	2.93	1341	3.11	1365	3.28	1388	3.46	1411	3.64	1433	3.82	1456	4	1478	4.19	1499	4.37	1520	4.56
8000	1368	3.26	1392	3.45	1415	3.65	1438	3.83	1460	4.02	1482	4.21	1503	4.4	1525	4.6	1546	4.79	1567	4.99
9000	1474	4.03	1496	4.23	1518	4.44	1540	4.66	1562	4.87	1583	5.09	1604	5.31	1624	5.52	1643	5.73	-	-
10000	1584	4.95	1605	5.17	1626	5.4	1646	5.62	-	-	-	-	-	-	-	-	-	-	-	-
11000	-	-	-	-	-	-	-	-	-	-	-	-	-	-	-	-	-	-	-	-
12000	-	-	-	-	-	-	-	-	-	-	-	-	-	-	-	-	-	-	-	-

Notes:

1. Available External Static Pressure is the static pressure difference between the return duct and the supply duct plus the static pressure drop caused by accessories and options.
2. For direct drive evaporator fan speed (rpm), refer to the applicable table in the fan performance section.
3. Data includes pressure drop due to standard filters and wet coils. No accessories or options are included in pressure drop data.
4. To determine static pressure drop due to other options/accessories, refer to the applicable table in the fan performance section.
5. Direct drive fan motor heat is negligible.
6. Factory supplied motors, in commercial equipment, are definite purpose motors, specifically designed and tested to operate reliably and continuously at all cataloged conditions. Using the full horsepower range of our fan motors as shown in our tabular data will not result in nuisance tripping or premature motor failure. Our product's warranty will not be affected.

Table 150. Evaporator fan performance - 25 ton (model DSK, DHK), horizontal, high heat, high static motor

Available External Static Pressure (Inches of Water Gauge)																				
	0.10		0.20		0.30		0.40		0.50		0.60		0.70		0.80		0.90		1.00	
CFM	RPM	BHP	RPM	BHP	RPM	BHP	RPM	BHP	RPM	BHP	RPM	BHP	RPM	BHP	RPM	BHP	RPM	BHP	RPM	BHP
7500	1036	1.28	1066	1.43	1095	1.58	1124	1.73	1154	1.90	1183	2.06	1211	2.22	1238	2.39	1264	2.57	1291	2.75
8000	1102	1.53	1129	1.69	1157	1.85	1183	2.01	1212	2.18	1240	2.35	1266	2.53	1292	2.71	1318	2.88	1343	3.07
9000	1233	2.13	1257	2.30	1282	2.48	1306	2.67	1330	2.85	1355	3.04	1380	3.24	1404	3.43	1428	3.63	1451	3.83

Table 150. Evaporator fan performance - 25 ton (model DSK, DHK), horizontal, high heat, high static motor (continued)

Available External Static Pressure (Inches of Water Gauge)																				
	0.10		0.20		0.30		0.40		0.50		0.60		0.70		0.80		0.90		1.00	
CFM	RPM	BHP	RPM	BHP	RPM	BHP	RPM	BHP	RPM	BHP	RPM	BHP	RPM	BHP	RPM	BHP	RPM	BHP	RPM	BHP
10000	1365	2.88	1387	3.07	1409	3.27	1431	3.47	1453	3.67	1473	3.87	1497	4.09	1519	4.30	1541	4.52	1563	4.74
11000	1497	3.78	1517	4.00	1537	4.21	1557	4.43	1577	4.65	1597	4.87	1616	5.10	1636	5.33	1657	5.56	1675	5.65
12000	1629	4.87	1648	5.10	1666	5.33	1685	5.57	1701	5.63	1721	5.87	1735	6.11	1753	6.36	1773	6.60	1787	6.56
Available External Static Pressure (Inches of Water Gauge)																				
	1.10		1.20		1.30		1.40		1.50		1.60		1.70		1.80		1.90		2.00	
CFM	RPM	BHP	RPM	BHP	RPM	BHP	RPM	BHP	RPM	BHP	RPM	BHP	RPM	BHP	RPM	BHP	RPM	BHP	RPM	BHP
7500	1316	2.93	1341	3.11	1365	3.28	1388	3.46	1411	3.64	1433	3.82	1456	4	1478	4.19	1499	4.37	1520	4.56
8000	1368	3.26	1392	3.45	1415	3.65	1438	3.83	1460	4.02	1482	4.21	1503	4.4	1525	4.6	1546	4.79	1567	4.99
9000	1474	4.03	1496	4.23	1518	4.44	1540	4.66	1562	4.87	1583	5.09	1604	5.31	1624	5.52	1643	5.73	1662	5.94
10000	1584	4.95	1605	5.17	1626	5.4	1646	5.62	1664	5.72	1684	5.97	1705	6.22	1723	6.44	1740	6.67	1757	6.9
11000	1694	5.87	1714	6.11	1734	6.36	1752	6.58	1766	6.57	1785	6.85	1806	7.13	1822	7.36	1837	7.61	1852	7.86
12000	1804	6.79	1823	7.05	1842	7.32	1858	7.54	1868	7.42	1886	7.73	1907	8.04	-	-	-	-	-	-

Notes:

1. Available External Static Pressure is the static pressure difference between the return duct and the supply duct plus the static pressure drop caused by accessories and options.
2. For direct drive evaporator fan speed (rpm), refer to the applicable table in the fan performance section.
3. Data includes pressure drop due to standard filters and wet coils. No accessories or options are included in pressure drop data.
4. To determine static pressure drop due to other options/accessories, refer to the applicable table in the fan performance section.
5. Direct drive fan motor heat is negligible.
6. Factory supplied motors, in commercial equipment, are definite purpose motors, specifically designed and tested to operate reliably and continuously at all cataloged conditions. Using the full horsepower range of our fan motors as shown in our tabular data will not result in nuisance tripping or premature motor failure. Our product's warranty will not be affected.

Fan Performance

Table 151. Outdoor sound power level

Tons	Unit Model Number	Octave Center Frequency								Overall dBA
		63	125	250	500	1000	2000	4000	8000	
Standard Efficiency										
3	W/DSK036	82	81	80	77	73	69	65	61	79
4	W/DSK048	83	84	82	80	76	72	68	63	82
5	W/DSK060	84	84	82	80	77	73	69	67	82
6	W/DSK072	84	85	84	85	82	76	73	67	86
7.5	W/DSK090	87	87	86	83	81	77	73	67	86
8.5	W/DSK102	87	87	86	83	81	77	73	67	86
10	WSK120B	87	87	86	83	81	77	73	67	86
	DSK120	88	89	90	87	84	79	75	67	89
12.5	W/DSK150	89	89	91	89	86	82	79	73	91
15	W/DSK180	89	89	91	89	86	82	79	73	91
17.5	W/DSK210	94	90	92	91	88	84	81	75	93
20	W/DSK240	94	90	92	91	88	84	81	75	93
25	W/DSK300	94	90	92	91	88	84	81	75	93
High Efficiency										
3	W/DHK036	87	83	84	83	81	75	70	64	85
4	W/DHK048	85	87	86	85	83	78	73	68	88
5	W/DHK060	85	87	86	85	83	79	74	70	88
6	W/DHK072	84	85	84	85	82	76	73	67	86
7.5	W/DHK090	87	87	86	83	81	77	73	67	86
8.5	W/DHK102	87	87	86	83	81	77	73	67	86
10	W/DHK120	88	89	90	87	84	79	75	67	89
12.5	W/DHK150	89	89	91	89	86	82	79	73	91
15	W/DHK180	89	89	91	89	86	82	79	73	91
17.5	W/DHK210	94	90	92	91	88	84	81	75	93
20	W/DHK240	94	90	92	91	88	84	81	75	93
25	W/DHK300	94	90	92	91	88	84	81	75	93

Note: Outdoor sound rating shown is tested in accordance with AHRI 270/370-2015.

Table 152. Static pressure drop through accessories (inches water column)

Tons	Unit Model Number	cfm	Standard Filters[a]	2" MERV 8 Filter[b]	2" MERV 13 Filter[b]	Reheat Coil	Economizer with OA/RA Dampers[c]								Staged Control and SCR Modulating Electric Heat				
							Downflow		Horizontal		Low Leak Downflow[e]		Low Leak Horizontal		Accessory (kW)				
							100% OA	100% RA	100% OA	100% RA	100% OA	100% RA	100% OA	100% RA	5-6	9-18	23-36	54	72
3	W/DSK036A	900	0.01	0.01	0.03	0.01	0.12	0.01	0.12	0.01	0.07	0.04	0.15	0.01	0.01	0.01	0.01	—	—
		1200	0.01	0.02	0.04	0.01	0.20	0.02	0.20	0.01	0.12	0.08	0.25	0.01	0.02	0.02	0.02	—	—
		1440	0.02	0.03	0.06	0.01	0.27	0.03	0.27	0.02	0.17	0.11	0.35	0.02	0.02	0.03	0.03	—	—
	W/DHK036A	900	0.02	0.02	0.03	0.00	0.01	0.00	0.02	0.01	0.02	0.00	0.04	0.02	0.00	0.00	0.01	—	—
		1200	0.02	0.03	0.04	0.00	0.02	0.00	0.02	0.01	0.04	0.00	0.06	0.03	0.00	0.00	0.02	—	—
		1440	0.03	0.03	0.05	0.00	0.03	0.01	0.03	0.01	0.05	0.00	0.08	0.05	0.01	0.01	0.02	—	—
4	W/DSK048A	1200	0.01	0.02	0.04	0.01	0.20	0.02	0.20	0.01	0.12	0.08	0.25	0.01	0.02	0.03	0.03	—	—
		1600	0.02	0.03	0.06	0.01	0.33	0.03	0.33	0.02	0.21	0.14	0.42	0.02	0.04	0.05	0.05	—	—
		1920	0.03	0.04	0.09	0.01	0.45	0.04	0.45	0.03	0.30	0.20	0.60	0.03	0.05	0.06	0.08	—	—
	W/DHK048A	1200	0.02	0.03	0.04	0.00	0.02	0.00	0.02	0.01	0.04	0.00	0.06	0.03	0.00	0.00	0.02	—	—
		1600	0.03	0.04	0.06	0.01	0.04	0.01	0.03	0.02	0.07	0.00	0.10	0.06	0.01	0.01	0.02	—	—
		1920	0.03	0.04	0.08	0.01	0.06	0.01	0.04	0.02	0.10	0.00	0.14	0.09	0.01	0.01	0.02	—	—
5	W/DSK060A	1500	0.02	0.03	0.06	0.01	0.29	0.03	0.29	0.02	0.18	0.12	0.38	0.02	0.04	0.05	0.05	—	—
		2000	0.03	0.04	0.09	0.01	0.48	0.05	0.48	0.03	0.32	0.22	0.65	0.04	0.06	0.07	0.08	—	—
		2400	0.04	0.06	0.12	0.02	0.66	0.07	0.66	0.04	0.46	0.31	0.92	0.05	0.08	0.10	0.12	—	—
	W/DHK060A	1500	0.03	0.03	0.06	0.00	0.03	0.01	0.03	0.02	0.06	0.00	0.09	0.05	0.01	0.01	0.02	—	—
		2000	0.03	0.05	0.08	0.01	0.07	0.01	0.05	0.02	0.11	0.00	0.15	0.09	0.01	0.01	0.02	—	—
		2400	0.04	0.06	0.10	0.02	0.10	0.01	0.06	0.03	0.16	0.01	0.20	0.13	0.02	0.02	0.03	—	—
6	W/DSK072A W/DHK072A	1800	0.03	0.04	0.07	0.04	0.05	0.01	0.04	0.02	0.09	0.00	0.12	0.08	—	0.01	0.02	—	—
		2400	0.04	0.06	0.1	0.06	0.10	0.01	0.06	0.03	0.16	0.01	0.2	0.13	—	0.02	0.03	—	—
		2880	0.04	0.07	0.13	0.07	0.14	0.02	0.08	0.04	0.24	0.01	0.28	0.19	—	0.03	0.03	—	—
7.5	W/DSK090A W/DHK090A	2250	0.03	0.05	0.09	0.05	0.09	0.01	0.05	0.02	0.14	0.01	0.18	0.12	—	0.02	0.02	—	—
		3000	0.05	0.08	0.13	0.07	0.15	0.02	0.09	0.04	0.26	0.01	0.3	0.21	—	0.03	0.03	—	—
		3600	0.05	0.1	0.17	0.09	0.22	0.02	0.12	0.06	0.39	0.02	0.42	0.29	—	0.04	0.05	—	—
8.5	W/DSK102A W/DHK102A	2550	0.04	0.06	0.11	0.06	0.11	0.01	0.06	0.03	0.19	0.01	0.23	0.15	—	0.02	0.03	—	—
		3400	0.05	0.09	0.16	0.09	0.20	0.02	0.11	0.05	0.34	0.02	0.38	0.26	—	0.03	0.04	—	—
		4080	0.06	0.12	0.2	0.1	0.28	0.03	0.15	0.07	0.50	0.03	0.53	0.37	—	0.05	0.06	—	—
10	WSK120B	3000	0.05	0.08	0.13	0.07	0.15	0.02	0.09	0.04	0.26	0.01	0.3	0.21	—	0.02	0.03	0.03	—
		4000	0.06	0.12	0.2	0.1	0.27	0.03	0.15	0.07	0.48	0.03	0.51	0.35	—	0.02	0.03	0.03	—
		4800	0.07	0.16	0.25	0.12	0.39	0.03	0.20	0.09	0.71	0.05	0.71	0.49	—	0.03	0.04	0.04	—
	DSK120A W/DHK120A	3000	0.04	0.06	0.12	0.02	0.15	0.02	0.09	0.04	0.26	0.01	0.3	0.21	—	0.01	0.02	0.02	—
		4000	0.05	0.09	0.17	0.03	0.27	0.03	0.15	0.07	0.48	0.03	0.51	0.35	—	0.02	0.03	0.03	—
		4800	0.07	0.12	0.21	0.03	0.39	0.03	0.20	0.09	0.71	0.05	0.71	0.49	—	0.02	0.03	0.03	—
12.5	W/DSK150A W/DHK150A	3750	0.02	0.04	0.07	0.02	0.10	0.02	0.10	0.02	0.11	0.09	0.05	0.09	—	0	0.01	0.01	—
		5000	0.03	0.06	0.10	0.04	0.15	0.03	0.15	0.03	0.17	0.13	0.09	0.14	—	0.01	0.03	0.03	—
		6000	0.04	0.08	0.13	0.04	0.20	0.04	0.20	0.04	0.23	0.17	0.12	0.18	—	0.01	0.04	0.04	—
15	W/DSK180A W/DHK180A	4500	0.03	0.05	0.09	0.04	0.13	0.02	0.13	0.02	0.14	0.11	0.07	0.12	—	0.01	0.02	0.02	—
		6000	0.04	0.08	0.13	0.04	0.20	0.04	0.20	0.04	0.23	0.17	0.12	0.18	—	0.01	0.04	0.04	—
		7200	0.06	0.1	0.17	0.04	0.27	0.05	0.27	0.05	0.32	0.23	0.16	0.25	—	0.02	0.06	0.06	—
17.5	W/DSK210A W/DHK210A	5250	0.04	0.06	0.11	0.04	0.16	0.03	0.16	0.03	0.19	0.14	0.09	0.15	—	—	0.03	0.03	0.03
		7000	0.05	0.10	0.17	0.04	0.26	0.05	0.26	0.05	0.3	0.22	0.15	0.24	—	—	0.06	0.06	0.06
		8400	0.07	0.13	0.22	0.06	0.35	0.06	0.35	0.06	0.42	0.29	0.21	0.33	—	—	0.09	0.09	0.09

Table 152. Static pressure drop through accessories (inches water column) (continued)

Tons	Unit Model Number	cfm	Standard Filters[a]	2" MERV 8 Filter[b]	2" MERV 13 Filter[b]	Reheat Coil	Economizer with OA/RA Dampers[c]								Staged Control and SCR Modulating Electric Heat				
							Downflow		Horizontal		Low Leak Downflow[e]		Low Leak Horizontal		Accessory (kW)				
							100% OA	100% RA	100% OA	100% RA	100% OA	100% RA	100% OA	100% RA	5-6	9-18	23-36	54	72
20	W/DSK240A W/DHK240A	6000	0.04	0.08	0.13	0.01	0.20	0.04	0.20	0.04	0.23	0.17	0.12	0.18	—	—	0.04	0.04	0.04
		8000	0.07	0.12	0.21	0.02	0.32	0.06	0.32	0.06	0.39	0.27	0.19	0.30	—	—	0.08	0.08	0.08
		9600	0.09	0.16	0.27	0.05	0.44	0.07	0.44	0.07	0.54	0.37	0.27	0.41	—	—	0.12	0.12	0.12
25	W/DSK300A W/DHK300A	7500	0.06	0.11	0.19	0.02	0.29	0.05	0.29	0.05	0.34	0.24	0.17	0.27	—	—	0.07	0.07	0.07
		10000	0.09	0.17	0.29	0.06	0.48	0.08	0.48	0.08	0.58	0.4	0.29	0.45	—	—	0.13	0.13	0.13
		12000	0.12	0.23	0.39	0.08	0.66	0.11	0.66	0.11	0.82	0.55	0.39	0.62	—	—	0.20	0.20	0.20

(a) Tested with: 2-in filters 3 to 25 Tons.
(b) Difference in pressure drop should be considered when utilizing optional 2-in pleated filters.
(c) OA = Outside Air and RA = Return Air.

Table 153. Static pressure drop through accessories (inches water column) — gas heater

Tons	Unit Model Number	cfm	2-Stage Gas Heater[a]					
			Downflow			Horizontal		
			L[d][e]	M[c]	H[b]	L[d][e]	M[c]	H[b]
3	DSK036A	900	0.01	0.01	0.01	0.02	0.02	0.04
		1200	0.01	0.01	0.02	0.04	0.04	0.08
		1440	0.02	0.02	0.03	0.06	0.06	0.11
	DHK036A	900*	0.04	0.04	0.07	0.04	0.02	0.07
		1200	0.04	0.04	0.08	0.07	0.02	0.11
		1440	0.05	0.05	0.09	0.1	0.04	0.15
4	DSK048A	1200	0.01	0.01	0.02	0.04	0.04	0.08
		1600	0.03	0.03	0.04	0.06	0.06	0.12
		1920	0.05	0.05	0.06	0.06	0.06	0.16
	DHK048A	1200*	0.04	0.04	0.08	0.07	0.02	0.11
		1600	0.06	0.06	0.1	0.11	0.05	0.17
		1920	0.08	0.08	0.11	0.16	0.08	0.23
5	DSK060A	1500	0.02	0.02	0.04	0.06	0.06	0.11
		2000	0.05	0.05	0.06	0.07	0.07	0.17
		2400	0.08	0.08	0.08	0.08	0.08	0.23
	DHK060A	1500*	0.05	0.05	0.09	0.1	0.04	0.16
		2000	0.08	0.08	0.11	0.17	0.09	0.24
		2400	0.11	0.11	0.13	0.22	0.16	0.32
6	DSK072A DHK072A	1800	0.04	0.04	0.03	0.13	0.13	0.13
		2400	0.05	0.05	0.05	0.24	0.24	0.21
		2880	0.07	0.07	0.08	0.35	0.35	0.3
7.5	DSK090A DHK090A	2250	0.11	0.11	0.05	0.19	0.19	0.11
		3000	0.17	0.17	0.08	0.33	0.33	0.16
		3600	0.24	0.24	0.11	0.46	0.46	0.23
8.5	DSK102A DHK102A	2550	0.13	0.13	0.06	0.24	0.24	0.13
		3400	0.22	0.22	0.1	0.41	0.41	0.2
		4080	0.31	0.31	0.14	0.59	0.59	0.3
10	DSK120A DHK120A	3000	0.16	0.16	0.08	0.07	0.07	0.15
		4000	0.32	0.32	0.12	0.26	0.26	0.24
		4800	0.48	0.48	0.16	0.47	0.47	0.32

Table 153. Static pressure drop through accessories (inches water column) — gas heater (continued)

Tons	Unit Model Number	cfm	2-Stage Gas Heater[a]					
			Downflow			Horizontal		
			L[d][e]	M[c]	H[b]	L[d][e]	M[c]	H[b]
12.5	DSK150A DHK150A	3750	-0.07	-0.07	-0.05	0.08	0.08	0.07
		5000	-0.06	-0.06	-0.04	0.1	0.1	0.1
		6000	-0.03	-0.03	-0.02	0.12	0.12	0.13
15	DSK180A DHK180A	4500	-0.07	-0.05	-0.06	0.08	0.08	0.1
		6000	-0.03	-0.02	-0.02	0.12	0.13	0.16
		7200	-0.01	0	0.01	0.11	0.13	0.19
17.5	DSK210A DHK210A	5250	-0.05	-0.03	-0.04	0.11	0.11	0.13
		7000	-0.01	-0.01	0	0.11	0.13	0.18
		8400	0.02	0.02	0.04	0.1	0.13	0.2
20	DSK240A DHK240A	6000	-0.03	-0.02	-0.02	0.12	0.13	0.16
		8000	0.01	0.01	0.03	0.1	0.13	0.19
		9600	0.04	0.05	0.07	0.1	0.14	0.21
25	DSK300A DHK300A	7500	0	0	0.01	0.11	0.13	0.19
		10000	0.06	0.07	0.08	0.11	0.15	0.21
		12000	0.14	0.15	0.14	0.16	0.21	0.31

Table 154. Static pressure drop through accessories (inches water column) — modulating gas heat option

Tons	Unit Model Number	cfm	Modulating Gas Heater[a]			
			Downflow		Horizontal	
			L	H	L	H
6	DSK072A DHK072A	1800	0.03	0.02	0.22	0.47
		2400	0.05	0.05	0.34	0.81
		2880	0.07	0.08	0.47	1.16
7.5	DSK090A DHK090A	2250	0.04	0.09	0.32	0.28
		3000	0.09	0.13	0.61	0.43
		3600	0.14	0.19	0.91	0.59
8.5	DSK102A DHK102A	2550	0.06	0.09	0.42	0.33
		3400	0.12	0.17	0.81	0.53
		4080	0.18	0.25	1.19	0.73
10	DSK120A DHK120A	3000	0.11	0.11	0.28	0.15
		4000	0.14	0.16	0.39	0.27
		4800	0.16	0.21	0.51	0.39
12.5	DSK150A DHK150A	3750	—	0.04	—	0.08
		5000	—	0.08	—	0.14
		6000	—	0.11	—	0.20
15	DSK180A DHK180A	4500	0.06	0.09	0.11	0.15
		6000	0.11	0.19	0.20	0.28
		7200	0.16	0.28	0.29	0.42
17.5	DSK210A DHK210A	5250	0.09	0.14	0.15	0.21
		7000	0.16	0.26	0.27	0.39
		8400	0.23	0.40	0.40	0.57
20	DSK240A DHK240A	6000	0.11	0.19	0.20	0.28
		8000	0.20	0.36	0.36	0.52
		9600	0.30	0.53	0.52	0.75

Table 154. Static pressure drop through accessories (inches water column) — modulating gas heat option (continued)

Tons	Unit Model Number	cfm	Modulating Gas Heater[a]			
			Downflow		Horizontal	
			L	H	L	H
25	DSK300A DHK300A	7500	0.18	—	0.31	—
		10000	0.33	—	0.56	—
		12000	0.49	—	0.81	—

[a] Model digit 10 selection B is Mod Gas of which Low Gas Heat is 2x2 for 6T, 4x4 for 7.5 to 12.5T, High Gas Heat is 4x4 for 6T, 6x6 for 7.5 to 12.5T. 12.5T D.0 is High only with 6-Tube. 15 to 25T units are Low with 6-Tube and High with 8-Tube.

Heating Performance

Table 155. Electric heater voltage correction factors (applicable to auxiliary heat capacity)

Nominal Voltage	Distribution Voltage	Capacity Multiplier
240	208	0.751
240	230	0.918
240	240	1.000
480	440	0.840
480	460	0.918
480	480	1.000
600	540	0.810
600	575	0.918
600	600	1.000

Table 156. Auxiliary electric heat capacity — standard efficiency — heat pump

Tons	Unit Model Number	Total[a]		No. of Stages or SCR [b]	Stage 1		Stage 2	
		kw Input[c]	MBh Output		kw Input	MBh Output	kw Input	MBh Output
3	WS*036*3,4,W	6.0	20.48	1	6.0	20.48	—	—
		12.0	40.97	2	6.0	20.48	6.0	20.48
		17.4	59.40	2	8.7	29.70	8.7	29.70
4	WS*048*3,4,W	6.0	20.48	1	6.0	20.48	—	—
		12.0	40.97	2	6.0	20.48	6.0	20.48
		17.4	59.40	2	8.7	29.70	8.7	29.70
5	WS*060*3,4,W	12.0	40.97	2	6.0	20.48	6.0	20.48
		17.4	59.40	2	8.7	29.70	8.7	29.70
		23.0	78.50	2	8.7	29.70	14.3	48.82
6 to 8.5	WS*072*3,4,W WS*090*3,4,W WS*102*3,4,W	9.0	30.73	1	9.0	30.73	—	—
		18.0	61.47	2	9.0	30.73	9.0	30.73
		27.0	92.20	2	18.0	61.47	9.0	30.73
		36.0	122.94	2	18.0	61.47	18.0	61.47
10	WS*120*3,4,W	18.0	61.47	2	9.0	30.73	9.0	30.73
		27.0	92.20	2	18.0	61.47	9.0	30.73
		36.0	122.94	2	18.0	61.47	18.0	61.47
		54.0	184.41	2	36.0	122.94	18.0	61.47
12.5 to 15	WS*150*3,4,W WS*180*3,4,W	18.0	61.47	1	18.0	61.47	—	—
		36.0	122.94	2	18.0	61.47	18.0	61.47
		54.0	184.41	2	36.0	122.94	18.0	61.47
17.5 to 25	WS*210*3,4,W WS*240*3,4,W WS*300*3,4,W	36.0	122.94	2	18.0	61.47	18.0	61.47
		54.0	184.41	2	36.0	122.94	18.0	61.47
		72.0	245.88	2	36.0	122.94	36.0	122.94

(a) Heaters are rated at 240V, 480V, and 600V. For other than rated voltage, CAP = (voltage/rated voltage)2 x rated cap.
(b) SCR Modulating Electric Heat can modulate down to 0% output, but a min airflow is required the heater air proving safeties.
(c) For all input/output categories, does not include fan power or heat.

Table 157. Auxiliary electric heat — air temperature rise — standard efficiency (3 to 6 tons) — heat pump

kW	Stages	3 Tons 900 cfm	4 Tons 1200 cfm	5 Tons 1500 cfm	6 Tons 1800 cfm
		Three Phase WS*036*3,4,W	Three Phase WS*048*3,4,W	Three Phase WS*060*3,4,W	Three Phase WS*072*3,4,W
6.00	1	21.07	15.81	12.64	—
9.00	1	—	—	—	15.81
12.00	2	42.15	31.61	25.29	—
18.00	1 or 2	63.22	47.42	37.93	31.61
23.00	2	—	—	48.47	—
27.00	2	—	—	—	47.42
36.00	2	—	—	—	63.22
54.00	2	—	—	—	—

Table 157. Auxiliary electric heat — air temperature rise — standard efficiency (3 to 6 tons) — heat pump (continued)

kW	Stages	3 Tons 900 cfm	4 Tons 1200 cfm	5 Tons 1500 cfm	6 Tons 1800 cfm
		Three Phase WS*036*3,4,W	Three Phase WS*048*3,4,W	Three Phase WS*060*3,4,W	Three Phase WS*072*3,4,W
72.00	2	—	—	—	—

Notes:

1. For minimum design airflow, see airflow performance table for each unit. To calculate temp. rise at different airflow, use the following formula:
   Temp. rise across Electric Heater = (kW x 3414)/(1.08 x cfm).
2. SCR Modulating Electric Heat can modulate down to 0% output, but a min airflow is required the heater air proving safeties.
3. Maximum discharge air temperature of SCR Modulating Electric Heat is less than 130°F.

Table 158. Auxiliary electric heat — air temperature rise — standard efficiency (7.5 to 12.5 tons) — heat pump

kW	Stages	7.5 Tons 2250 cfm	8.5 Tons 2550 cfm	10 Tons 3000 cfm	12.5 Tons 3750 cfm
		Three Phase WS*090*3,4,W	Three Phase WS*102*3,4,W	Three Phase WS*120*3,4,W	Three Phase WS*150*3,4,W
6.00	1	—	—	—	—
9.00	1	12.64	11.16	—	—
12.00	2	—	—	—	—
18.00	1 or 2	25.29	22.31	18.97	15.17
23.00	2	—	—	—	—
27.00	2	37.93	33.47	28.45	—
36.00	2	50.58	44.63	37.93	30.35
54.00	2	—	—	56.90	45.52
72.00	2	—	—	—	—

Notes:

1. For minimum design airflow, see airflow performance table for each unit. To calculate temp. rise at different airflow, use the following formula:
   Temp. rise across Electric Heater = (kW x 3414)/(1.08 x cfm).
2. SCR Modulating Electric Heat can modulate down to 0% output, but a min airflow is required the heater air proving safeties.
3. Maximum discharge air temperature of SCR Modulating Electric Heat is less than 130°F.

Table 159. Auxiliary electric heat — air temperature rise — standard efficiency (15 to 25 tons) — heat pump

kW	Stages	15 Tons 4500 cfm	17.5 Tons 5250 cfm	20 Tons 6000 cfm	25 Tons 7500 cfm
		Three Phase WS*180*3,4,W	Three Phase WS*210*3,4,W	Three Phase WS*240*3,4,W	Three Phase WS*300*3,4,W
6.00	1	—	—	—	—
9.00	1	—	—	—	—
12.00	2	—	—	—	—
18.00	1 or 2	12.64	—	—	—
23.00	2	—	—	—	—
27.00	2	—	—	—	—
36.00	2	25.28	21.67	18.96	15.17
54.00	2	37.93	32.51	28.45	22.76
72.00	2	—	43.35	37.93	30.34

Notes:

1. For minimum design airflow, see airflow performance table for each unit. To calculate temp. rise at different airflow, use the following formula:
   Temp. rise across Electric Heater = (kW x 3414)/(1.08 x cfm).
2. SCR Modulating Electric Heat can modulate down to 0% output, but a min airflow is required the heater air proving safeties.
3. Maximum discharge air temperature of SCR Modulating Electric Heat is less than 130°F.

Table 160. Auxiliary electric heat capacity — high efficiency — heat pump

Tons	Unit Model Number	Total[a]		No. of Stages or SCR [b]	Stage 1		Stage 2	
		kw Input[c]	MBh Output		kw Input	MBh Output	kw Input	MBh Output
3	WH*036*3,4,W	6.0	20.48	1	6.0	20.48	—	—
		12.0	40.97	2	6.0	20.48	6.0	20.48
		18.0	59.40	2	9.0	30.73	9.0	30.73
4	WH*048*3,4,W	6.0	20.48	1	6.0	20.48	—	—
		12.0	40.97	2	6.0	20.48	6.0	20.48
		18.0	59.40	2	9.0	30.73	9.0	30.73
5	WH*060*3,4,W	6.0	20.48	1	6.0	20.48	—	—
		12.0	40.97	2	6.0	20.48	6.0	20.48
		18.0	59.40	2	9.0	30.73	9.0	30.73
		27.0	92.21	2	18.0	61.47	9.0	30.73
6 to 8.5	WH*072*3,4,W WH*090*3,4,W WH*102*3,4,W	9.0	30.73	1	9.0	30.73	—	—
		18.0	61.47	2	9.0	30.73	9.0	30.73
		27.0	92.20	2	18.0	61.47	9.0	30.73
		36.0	122.94	2	18.0	61.47	18.0	61.47
10	WH*120*3,4,W	18.0	61.47	1	18.0	61.47	—	—
		27.0	92.20	2	18.0	61.47	9.0	30.73
		36.0	122.94	2	18.0	61.47	18.0	61.47
		54.0	184.41	2	36.0	122.94	18.0	61.47
12.5 to 15	WH*150*3,4,W WH*180*3,4,W	18.0	61.47	1	18.0	61.47	—	—
		36.0	122.94	2	18.0	61.47	18.0	61.47
		54.0	184.41	2	36.0	122.94	18.0	61.47
17.5 to 25	WH*210*3,4,W WH*240*3,4,W WH*300*3,4,W	36.0	122.94	2	18.0	61.47	18.0	61.47
		54.0	184.41	2	36.0	122.94	18.0	61.47
		72.0	245.88	2	36.0	122.94	36.0	122.94

(a) Heaters are rated at 240V, 480V, and 600V. For other than rated voltage, CAP = (voltage/rated voltage)2 x rated cap.
(b) SCR Modulating Electric Heat can modulate down to 0% output, but a min airflow is required the heater air proving safeties.
(c) For all input/output categories, does not include fan power or heat.

Table 161. Auxiliary electric heat — air temperature rise — high efficiency (3 to 6 ton) — heat pump

kW	Stages	3 Tons 900 cfm	4 Tons 1200 cfm	5 Tons 1500 cfm	6 Tons 1800 cfm
		Three Phase WH*036*3,4,W	Three Phase WH*048*3,4,W	Three Phase WH*060*3,4,W	Three Phase WH*072*3,4,W
6.00	1	21.07	15.81	12.64	—
9.00	1	—	—	—	15.81
12.00	2	42.15	31.61	25.29	—
18.00	1 OR 2	63.22	47.42	37.93	31.61
23.00	2	—	—	—	—
27.00	2	—	—	56.90	47.42
36.00	2	—	—	—	63.22
54.00	2	—	—	—	—
72.00	2	—	—	—	—

Notes:

1. For minimum design airflow, see airflow performance table for each unit. To calculate temp. rise at different airflow, use the following formula:
   Temp. rise across Electric Heater = (kW x 3414)/(1.08 x cfm).
2. SCR Modulating Electric Heat can modulate down to 0% output, but a min airflow is required the heater air proving safeties.
3. Maximum discharge air temperature of SCR Modulating Electric Heat is less than 130°F.

Table 162. Auxiliary electric heat — air temperature rise — high efficiency (7.5 to 12.5 ton) — heat pump

kW	Stages	7.5 Tons 2250 cfm	8.5 Tons 2550 cfm	10 Tons 3000 cfm	12.5 Tons 3750 cfm
		Three Phase WH*090*3,4,W	Three Phase WH*102*3,4,W	Three Phase WH*120*3,4,W	Three Phase WH*150*3,4,W
6.00	1	—	—	—	—
9.00	1	12.64	11.16	—	—
12.00	2	—	—	—	—
18.00	1 OR 2	25.29	22.31	18.97	15.17
23.00	2	—	—	—	—

Table 162. Auxiliary electric heat — air temperature rise — high efficiency (7.5 to 12.5 ton) — heat pump (continued)

kW	Stages	7.5 Tons 2250 cfm	8.5 Tons 2550 cfm	10 Tons 3000 cfm	12.5 Tons 3750 cfm
		Three Phase WH*090*3,4,W	Three Phase WH*102*3,4,W	Three Phase WH*120*3,4,W	Three Phase WH*150*3,4,W
27.00	2	37.93	33.47	28.45	—
36.00	2	50.58	44.63	37.93	30.35
54.00	2	—	—	56.90	45.52
72.00	2	—	—	—	—

Notes:

1. For minimum design airflow, see airflow performance table for each unit. To calculate temp. rise at different airflow, use the following formula:
   Temp. rise across Electric Heater = (kW x 3414)/(1.08 x cfm).
2. SCR Modulating Electric Heat can modulate down to 0% output, but a min airflow is required the heater air proving safeties.
3. Maximum discharge air temperature of SCR Modulating Electric Heat is less than 130°F.

Table 163. Auxiliary electric heat — air temperature rise — high efficiency (15 to 25 ton) — heat pump

kW	Stages	15 Tons 4500 cfm	17.5 Tons 5250 cfm	20 Tons 6000 cfm	25 Tons 7500 cfm
		Three Phase WH*180*3,4,W	Three Phase WH*210*3,4,W	Three Phase WH*240*3,4,W	Three Phase WH*300*3,4,W
6.00	1	—	—	—	—
9.00	1	—	—	—	—
12.00	2	—	—	—	—
18.00	1 OR 2	12.64	—	—	—
23.00	2	—	—	—	—
27.00	2	—	—	—	—
36.00	2	25.28	21.67	18.96	15.17
54.00	2	37.93	32.51	28.45	22.76
72.00	2	—	43.35	37.93	30.34

Notes:

1. For minimum design airflow, see airflow performance table for each unit. To calculate temp. rise at different airflow, use the following formula:
   Temp. rise across Electric Heater = (kW x 3414)/(1.08 x cfm).
2. SCR Modulating Electric Heat can modulate down to 0% output, but a min airflow is required the heater air proving safeties.
3. Maximum discharge air temperature of SCR Modulating Electric Heat is less than 130°F.

Table 164. Gas-fired heating capacities — staged gas — dual fuel standard efficiency

Tons	Unit Model Number	Heating Input BTU (High / Low Stage)	Heating Output BTU (High / Low Stage)	Air Temperature Rise°F
3	DSK036A**(0,A)L	80,000/56,000	64,800/45,300	35-65
	DSK036A**(0,A)M	100,000/70,000	81,000/56,700	50-80
	DSK036A**(0,A)H	120,000/84,000	97,200/68,000	55-85
4	DSK048A**(0,A)L	80,000/56,000	64,800/45,300	20-50
	DSK048A**(0,A)M	100,000/70,000	81,000/56,700	30-60
	DSK048A**(0,A)H	130,000/91,000	105,300/73,700	45-75
5	DSK060A**(0,A)L	80,000/56,000	64,800/45,300	15-45
	DSK060A**(0,A)M	100,000/70,000	81,000/56,700	25-55
	DSK060A**(0,A)H	150,000/105,000	121,500/85,100	40-70
6	DSK072A**(0,A)L	80,000/56,000	64,800/45,300	10 - 40
	DSK072A**(0,A)M	120,000/84,000	97,200/68,000	20 - 50
	DSK072A**(0,A)H	150,000/105,000	121,500/85,000	30 - 60
7.5	DSK090A**(0,A)L	120,000/84,000	97,200/68,000	15 - 45
	DSK090A**(0,A)M	150,000/105,000	121,500/85,000	20 - 50
	DSK090A**(0,A)H	200,000/140,000	162,000/113,400	30 - 60

Table 164. Gas-fired heating capacities — staged gas — dual fuel standard efficiency (continued)

Tons	Unit Model Number	Heating Input BTU (High / Low Stage)	Heating Output BTU (High / Low Stage)	Air Temperature Rise°F
8.5	DSK102A**(0,A)L	120,000/84,000	97,200/68,000	15 - 45
	DSK102A**(0,A)M	150,000/105,000	121,500/85,100	20 - 50
	DSK102A**(0,A)H	200,000/140,000	162,000/113,400	30 - 60
10	DSK120A**(0,A)L	150,000/105,000	121,500/85,000	15 - 45
	DSK120A**(0,A)M	200,000/140,000	162,000/113,400	25 - 55
	DSK120A**(0,A)H	250,000 / 175,000	202,500 / 141,750	30 - 60
12.5	DSK150A**(0,A)L	150,000 / 105,000	121,500 / 85,000	10 - 40
	DSK150A**(0,A)M	200,000 / 140,000	162,000 / 113,400	15 - 45
	DSK150A**(0,A)H	250,000 / 175,000	202,500 / 141,750	25 - 55
15	DSK180A**(0,A)L	250,000 / 175,000	202,500 / 141,750	15 - 45
	DSK180A**(0,A)M	320,000 / 224,000	259,200 / 181,440	20 - 50
	DSK180A**(0,A)H	400,000 / 280,000	324,000 / 226,800	25 - 55
17.5	DSK210A**(0,A)L	250,000 / 175,000	202,500 / 141,750	15 - 45
	DSK210A**(0,A)M	320,000 / 224,000	259,200 / 181,440	20 - 50
	DSK210A**(0,A)H	400,000 / 280,000	324,000 / 226,800	25 - 55
20	DSK240A**(0,A)L	250,000 / 175,000	202,500 / 141,750	10 - 40
	DSK240A**(0,A)M	320,000 / 224,000	259,200 / 181,440	15 - 45
	DSK240A**(0,A)H	400,000 / 280,000	324,000 / 226,800	20 - 50
25	DSK300A**(0,A)L	250,000 / 175,000	202,500 / 141,750	10 - 40
	DSK300A**(0,A)M	320,000 / 224,000	259,200 / 181,440	15 - 45
	DSK300A**(0,A)H	400,000 / 280,000	324,000 / 226,800	20 - 50

Table 165. Gas-fired heating capacities — modulating gas — dual fuel standard efficiency

Tons	Unit Model Number	Heating Input BTU (Maximum / Minimum)	Heating Output BTU (Maximum / Minimum)	Air Temperature Rise°F
6	DSK072A**BL	80,000/8,000	64,800/6,480	5 - 40
7.5	DSK090A**BH	200,000/20,000	162,000/16,200	5 - 60
8.5	DSK102A**BL	120,000/12,000	97,200/9,720	5 - 45
	DSK102A**BH	200,000/20,000	162,000/16,200	5 - 60
10	DSK120A**BL	150,000/15,000	121,500/12,150	5 - 45
	DSK120A**BH	250,000/25,000	202,500/20,250	5 - 60
12.5	DSK150A**BH	250,000 / 25,000	202,500 / 20,250	5 - 55
15	DSK180A**BL	250,000 / 25,000	202,500 / 20,250	5 - 45
	DSK180A**BH	400,000 / 40,000	324,000 / 32,400	5 - 55
17.5	DSK210A**BL	250,000 / 25,000	202,500 / 20,250	5 - 45
	DSK210A**BH	400,000 / 40,000	324,000 / 32,400	5 - 55
20	DSK240A**BL	250,000 / 25,000	202,500 / 20,250	5 - 40
	DSK240A**BH	400,000 / 40,000	324,000 / 32,400	5 - 50
25	DSK300A**BL	250,000 / 25,000	202,500 / 20,250	5 - 40

Table 166. Gas-fired heating capacities — Low NOx gas heat — dual fuel high efficiency

Tons	Unit Model Number	Heating Input BTU	Heating Output BTU	Air Temperature Rise°F
3	DHK036A**CL	60,000	48,600	25-55
4	DHK048A**CL	60,000	48,600	15-45
5	DHK060A**CL	60,000	48,600	10-40

Table 167. Gas-fired heating capacities — staged gas — dual fuel high efficiency

Tons	Unit Model Number	Heating Input BTU (High / Low Stage)	Heating Output BTU (High / Low Stage)	Air Temperature Rise°F
3	DHK036A**(0,A)L	80,000/56,000	64,800/45,300	35-65
	DHK036A**(0,A)M	100,000/70,000	81,000/56,700	50-80
	DHK036A**(0,A)H	120,000/84,000	97,200/68,000	60-90
4	DHK048A**(0,A)L	80,000/56,000	64,800/45,300	25-55
	DHK048A**(0,A)M	100,000/70,000	81,000/56,700	30-60
	DHK048A**(0,A)H	130,000/91,000	105,300/73,700	45-75
5	DHK060A**(0,A)L	80,000/56,000	64,800/45,300	15-45
	DHK060A**(0,A)M	100,000/70,000	81,000/56,700	25-55
	DHK060A**(0,A)H	150,000/105,000	121,500/85,100	30-60
6	DHK072A**(0,A)L	80,000/56,000	64,800/45,300	10 - 40
	DHK072A**(0,A)M	120,000/84,000	97,200/68,000	20 - 50
	DHK072A**(0,A)H	150,000/105,000	121,500/85,000	30 - 60
7.5	DHK090A**(0,A)L	120,000/84,000	97,200/68,000	15 - 45
	DHK090A**(0,A)M	150,000/105,000	121,500/85,000	20 - 50
	DHK090A**(0,A)H	200,000/140,000	162,000/113,400	30 - 60
8.5	DHK102A**(0,A)L	120,000/84,000	97,200/68,000	15 - 45
	DHK102A**(0,A)M	150,000/105,000	121,500/85,100	20 - 50
	DHK102A**(0,A)H	200,000/140,000	162,000/113,400	30 - 60
10	DHK120A**(0,A)L	150,000/105,000	121,500/85,000	15 - 45
	DHK120A**(0,A)M	200,000/140,000	162,000/113,400	25 - 55
	DHK120A**(0,A)H	250,000/175,000	202,500/141,750	30 - 60
12.5	DHK150A**(0,A)L	150,000 / 105,000	121,500 / 85,000	10 - 40
	DHK150A**(0,A)M	200,000 / 140,000	162,000 / 113,400	15 - 45
	DHK150A**(0,A)H	250,000 / 175,000	202,500 / 141,750	25 - 55
15	DHK180A**(0,A)L	250,000 / 175,000	202,500 / 141,750	15 - 45
	DHK180A**(0,A)M	320,000 / 224,000	259,200 / 181,440	20 - 50
	DHK180A**(0,A)H	400,000 / 280,000	324,000 / 226,800	25 - 55
17.5	DHK210A**(0,A)L	250,000 / 175,000	202,500 / 141,750	15 - 45
	DHK210A**(0,A)M	320,000 / 224,000	259,200 / 181,440	20 - 50
	DHK210A**(0,A)H	400,000 / 280,000	324,000 / 226,800	25 - 55
20	DHK240A**(0,A)L	250,000 / 175,000	202,500 / 141,750	10 - 40
	DHK240A**(0,A)M	320,000 / 224,000	259,200 / 181,440	15 - 45
	DHK240A**(0,A)H	400,000 / 280,000	324,000 / 226,800	20 - 50

Table 167. Gas-fired heating capacities — staged gas — dual fuel high efficiency (continued)

Tons	Unit Model Number	Heating Input BTU (High / Low Stage)	Heating Output BTU (High / Low Stage)	Air Temperature Rise°F
25	DHK300A**(0,A)L	250,000 / 175,000	202,500 / 141,750	10 - 40
	DHK300A**(0,A)M	320,000 / 224,000	259,200 / 181,440	15 - 45
	DHK300A**(0,A)H	400,000 / 280,000	324,000 / 226,800	20 - 50

Table 168. Gas-fired heating capacities — modulating gas — dual fuel high efficiency

Tons	Unit Model Number	Heating Input BTU (Maximum / Minimum)	Heating Output BTU (Maximum / Minimum)	Air Temperature Rise°F
6	DHK072A**BL	80,000/8,000	64,800/6,480	5 - 40
7.5	DHK090A**BH	200,000/20,000	162,000/16,200	5 - 60
8.5	DHK102A**BL	120,000/12,000	97,200/9,720	5 - 45
	DHK102A**BH	200,000/20,000	162,000/16,200	5 - 60
10	DHK120A**BL	150,000/15,000	121,500/12,150	5 - 45
	DHK120A**BH	250,000/25,000	202,500/20,250	5 - 60
12.5	DHK150A**BH	250,000 / 25,000	202,500 / 20,250	5 - 55
15	DHK180A**BL	250,000 / 25,000	202,500 / 20,250	5 - 45
	DHK180A**BH	400,000 / 40,000	324,000 / 32,400	5 - 55
17.5	DHK210A**BL	250,000 / 25,000	202,500 / 20,250	5 - 45
	DHK210A**BH	400,000 / 40,000	324,000 / 32,400	5 - 55
20	DHK240A**BL	250,000 / 25,000	202,500 / 20,250	5 - 40
	DHK240A**BH	400,000 / 40,000	324,000 / 32,400	5 - 50
25	DHK300A**BL	250,000 / 25,000	202,500 / 20,250	5 - 40

Controls

Enhanced BAS Integration and Connectivity

- Symbio™ 700 integrates seamlessly with Tracer® Synchrony and Tracer Ensemble® to deliver optimized building automation and building management features and functions.
- Easily integrate with open standard protocols to connect seamlessly to a Building Automation System (BAS).
- Digit 21 must equal 1, 2, or 3 for communication support.

BACnet Communications

Symbio™ 700 includes native BACnet® communications which allows the unit to communicate directly with a Tracer® or other BAS via open protocol BACnet MS/TP or IP.

Modbus Communications

Symbio™ 700 includes native Modbus communications which allows the unit to communicate directly with a Tracer® or other BAS via open protocol Modbus™ RTU or TCP/IP.

Air-Fi Wireless Communications

The optional Air-Fi® communications module allows the unit to communicate directly with a Tracer® or other BAS via open protocol BACnet over Zigbee wireless.

Secure Remote Connectivity with Trane Connect

The Symbio™ controller enables secure remote connectivity via Trane Connect® to Trane Intelligent Services and remote monitoring. Trane Connect provides anywhere/anytime access to monitor and manage with secure remote access and connectivity options through a multitude of platforms.

Serviceability

Symbio Service and Installation Mobile App

The Symbio™ Service and Installation mobile app is accessible through mobile devices (phones and tablets) via Bluetooth connectivity or via Trane Connect. The intuitive mobile app feels natural to technicians and operators. They will quickly be able to view equipment status and alarms, perform start-up tasks, change configurations, test the equipment's performance in specific modes—and much more. Free for download from App Store (Apple iOS) and Google Play (Android devices).

To download the Symbio Service and Installation Mobile App use the links below or scan the code with your mobile phone camera.

Apple download link (https://apps.apple.com/us/app/symbio-service-installation/id1309310176)

Google Play (Android) download link (https://play.google.com/store/apps/details?id=com.trane.mobileservicetool)

Figure 19. Scan code

Figure 20. Symbio service and installation mobile app

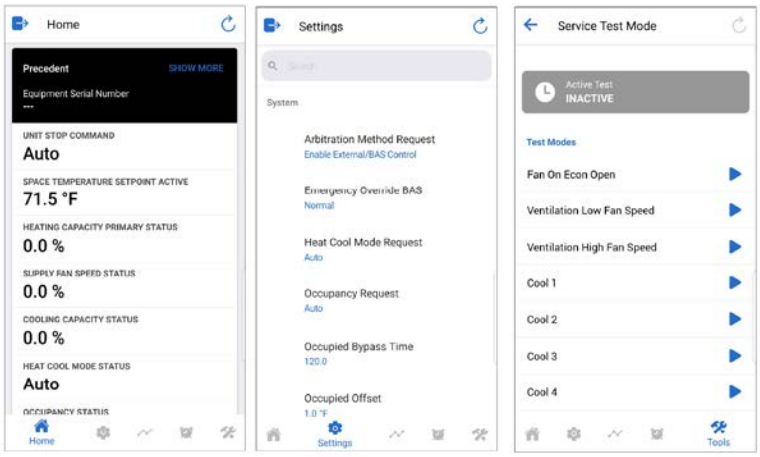

Onboard User Interface

An integrated onboard user interface that makes setup and continued operation easy. It provides real time operational performance, status, data, and alarms. It also allows the user to interact with, service, troubleshoot, and control their equipment without additional service software tools or when a mobile interface is not available.

Figure 21. Onboard user interface

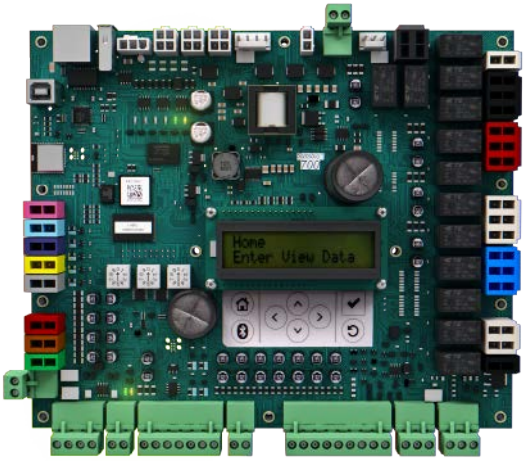

Service Test Mode

Symbio™ 700 requires no special tools to run the unit through its paces. Simply navigate to the ‘Service’ section of the on-board user interface or the ‘Tools’ section of the Symbio Service and Installation Mobile App and enter the ‘Service Test Mode’ section. Here the unit can be placed in the desired operating condition for a pre-determined amount of time supporting troubleshooting efforts in the field. The Symbio 700 will return to normal control when the user exits test mode or when the pre-determined, user-selected Service Test time has expired.

Symbio 700 Controls with Upgradeable Software

Equipment and systems feature engineered, tested, and proven applications that meet industry energy standards and provide the flexibility to customize and update over the life of the equipment. Professional operational algorithms are embedded within the Symbio™ 700 controller at the] factory. Symbio 700 standardizes each equipment unit to maintain standards for comfort, efficiency, and air quality, without additional field programming. Symbio 700 provides the flexibility over the life of the equipment to meet changing customer needs and/or industry standards.

Flexibility

Expansion Modules

- XM30 – Provides 4 universal inputs or analog outputs
- XM32 – Provides 4 binary outputs

Field Programming via TGP2

- Control ancillary equipment
- Custom sequences

TGP2 and XM Limitations

- Programs will only have access to available BACnet® points. (Ensures system reliability.)
- TGP2 programs will not have direct I/O control access for factory components. (Compressors will not be able to be directly controlled On/Off without going through factory provided protection sequences.)
- Onboard I/O will not be available to custom applied TGP2 programs. If additional I/O is required for a new control loop, a separate expansion module will be required.
- I/O will be limited to a maximum combination of 2 XM modules. Only XM30 or XM32 modules are supported by the Symbio™ 700.

Economizer Controls

Four options for economizer control are available: Dry Bulb Temperature, Comparative Enthalpy, Reference Enthalpy, and Differential Dry Bulb Temperature.

Dry Bulb Temperature Control

The dry bulb system measures outdoor temperature comparing it to the economizer enable setpoint. If the outdoor temperature is below the economizer enable setpoint, the economizer will operate freely. This system is best suited for arid regions where the humidity levels of outside air would not be detrimental to building comfort and indoor air quality.

Comparative Enthalpy Control

The comparative enthalpy system measures the temperature and humidity of both return air and outside air to determine which source has lower enthalpy. This system allows true comparison of outdoor air and return air enthalpy by measurement of outdoor air and return air temperature and humidity.

Reference Enthalpy Control

The reference enthalpy system compares outdoor air temperature and humidity to the economizer enthalpy enable setpoint. If outdoor air temperature and humidity are below the economizer enthalpy enable setpoint, the economizer will operate freely. This system provides more sophisticated control where outdoor air humidity levels may not be acceptable for building comfort and indoor air quality.

Differential Dry Bulb Temperature Control

The differential dry bulb system measures the temperature of both return air and outside air to determine when to economize. If outdoor air temperature is below the return air temperature minus a differential, the economizer will operate freely. This system is best suited for arid regions where the humidity levels of outside air would not be detrimental to building comfort and indoor air quality.

Zone Sensors

Zone Temperature Only

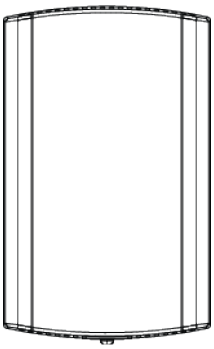

BAYSENS077

Provides temperature input only. Can be used as a secondary remote temperature input for thermostats.

Manual Changeover

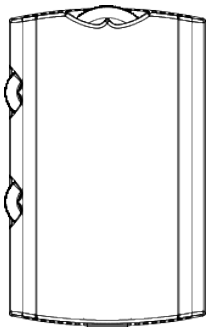

BAYSENS106

Heat, Cool or Off System Switch. Fan Auto or Off Switch. Single temperature setpoint thumbwheel.

Manual/Automatic Changeover

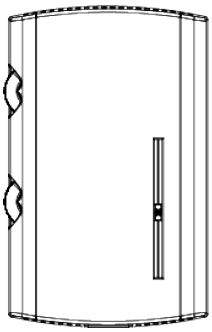

BAYSENS108

Auto, Heat, Cool or Off System Switch. Fan Auto or Off Switch. Dual temperature setpoint sliders

Integrated Comfort™ System

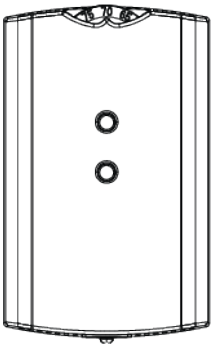

BAYSENS073 / BAYSENS074 / BAYSENS075

Sensor(s) available with optional temperature adjustment and override buttons to provide central control.

Wired Display Sensor

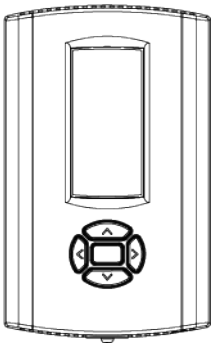

BAYSENS135

LCD display that provides heat, cool, auto, or off. Includes two temperature setpoints and a lockable setting with °F or °C indicators.

Touchscreen Digital Display Communicating Sensor

BAYSENS800

Uses BACnet® MS/TP link to communicate zone temperature and setpoints. Auto, Heat, Cool or Off System Switch. Fan Auto or On Switch. 7-day programmable thermostat with night setback.

Note: *Not compatible with VAV units. Requires BACnet communications.*

Air-Fi Wireless Communicating Zone Sensors

Wireless Zone Temperature Only

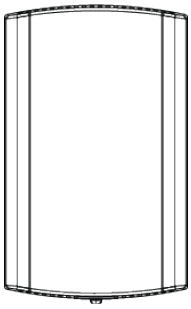

BAYSENS203

Measures temperature and optional humidity (with WCS-SH) for use in public spaces where no local user interface is preferred.

Note: *Requires BACnet communications.*

Wireless Display Sensor

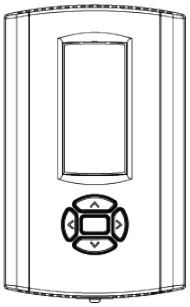

BAYSENS202

Easy-to-use interface for clear and simple monitoring and control. Can be configured for any system.

Note: *Requires BACnet communications.*

Wired CO_2 Sensor

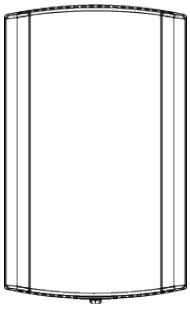

FIACO2K001 wall mount CO_2 Sensor
FIACO2K002 duct mount CO_2 Sensor

The maintenance-free carbon dioxide (CO_2) sensor is primarily used for demand control ventilation applications.

Wired Zone Temperature and Humidity Sensor

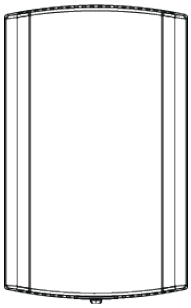

BAYSENS036

Measures temperature and relative humidity. Relative humidity input is used to control activation of dehumidification.

Thermostats

Digital Display Thermostat (3H/2C)

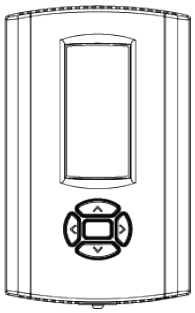

BAYSTAT155

Three Heat/Two Cool Auto changeover display thermostat.

Note: *Not compatible with VAV units.*

Pivot® Web Enabled Smart Thermostat (3H/2C)

BAYSTAT814

Our Pivot Smart Thermostat system is great for commercial buildings. With its intuitive touchscreen and customizable display, it is easy for occupants to use. The Pivot mobile app enables users to control multiple buildings remotely, making changes in seconds to all systems.

Note: *Not compatible with VAV units.*

Touchscreen Programmable Thermostat with Relative Humidity Sensor (3H/2C)

BAYSTAT152

Three Heat, Two Cool digital display thermostat with built-in humidity control. This thermostat combines both humidity and temperature into one.

Note: *Not compatible with VAV units.*

Humidity Control (HGRH)

Sequence of Operations

Humidity Control system capable of operating in normal cooling, dual mode to satisfy cooling and humidity requirements, and hot gas reheat mode when only humidity demand is required. Function between requirements and unit transition seamlessly providing an all-around comfort solution.

Note: *Supports Humidistat control. When the Humidistat input becomes active, compressors will stage to full capacity and modulate the 3-way valve.*

Initiation of Humidity Control

- Conforms to ASHRAE standard (62.1-2022)
- Dehumidification is initiated when too much moisture is in the space (>60°F Dew point)
  - Two measurement options are available for dehumidification status. Humidity control is started when:
    - Dew point is too high (60°F is default),
    - Relative Humidity is too high (60 percent is default)
    - Choice between these values above is user-configurable, and the actual values are adjustable by customer if desired
- Reheat circuit is initiated when space temperature drops below setpoint during humidity control.

Humidity Control Routine

There are two independent control loops: One to control latent load, the other to control sensible load.

Latent load is controlled by compressor staging:

- Compressors initially move up one stage from the last cooling mode stage.
- Compressors are staged up as needed by the controller to achieve a target leaving ID air dew point based on space conditions.

Sensible load is controlled with the Modulating 3 way valve:

- Modulating valve opens when space temperature is below setpoint.
- The reheat valve adjusts the amount of flow to reheat coil to achieve the targeted leaving ID air temperature, based on space conditions.

Purge Cycle

During dehumidification, every 120 minutes (default) a 3 minute cooling “purge cycle” will be executed. This purge cycle is executed for system reliability, specifically it helps manage oil return to compressors.

- Modulating valve moves to a fixed position based on OD air and compressor stage.
- Compressors move to full load.

Leaving Humidity Control and Returning to Cooling Only

- When space humidity drops to below the threshold humidity value (60°F dew point or 60% relative humidity), system reverts back to cooling mode. Dead band of ~5°F yields approximately 55°F dew point for switch to cooling.
- Unit can stay in humidity control mode indefinitely, with purge cycles happening regularly.
  - Relative humidity setpoint is 65 percent for unoccupied mode.
  - Dew point for unoccupied mode is the same as occupied (default 60°F DP).

Indoor Fan

Indoor fan minimum percent follows compressor staging. See *Symbio™ 700 Controller with Precedent™ Packaged Rooftop Air Conditioners Application Guide* (ACC-APG002*-EN).

Electrical Data

Table 169. Unit wiring — heat pump

Tons	Unit Model Number	Voltage Range	Standard Indoor Fan Motor		Oversized/High Static Indoor Fan Motor		Optional Power Exhaust Standard Indoor Fan Motor		Optional Power Exhaust Oversized/High Static Indoor Fan Motor	
			MCA	Max Fuse Size or Max Circuit Breaker	MCA	Max Fuse Size or Max Circuit Breaker	MCA	Max Fuse Size or Max Circuit Breaker	MCA	Max Fuse Size or Max Circuit Breaker
3	WSK036A3	187-253	23	30	25	35	25	35	28	35
	WSK036A4	414-506	10	15	13	15	11	15	14	15
	WSK036AW	517-632	10	15	11	15	11	15	12	15
	WHK036A3	187-253	23	30	—	—	29	35	—	—
	WHK036A4	414-506	13	15	—	—	16	20	—	—
	WHK036AW	517-632	9	15	—	—	12	15	—	—
3 HGRH	WHK036A3	187-253	25	30	—	—	31	40	—	—
	WHK036A4	414-506	14	15	—	—	17	20	—	—
4	WSK048A3	187-253	27	40	29	40	29	40	31	45
	WSK048A4	414-506	12	15	14	20	13	15	15	20
	WSK048AW	517-632	12	15	13	15	13	15	14	20
	WHK048A3	187-253	28	40	—	—	34	45	—	—
	WHK048A4	414-506	16	20	—	—	19	25	—	—
	WHK048AW	517-632	11	15	—	—	14	15	—	—
4 HGRH	WHK048A3	187-253	32	45	—	—	38	50	—	—
	WHK048A4	414-506	17	20	—	—	20	25	—	—
5	WSK060A3	187-253	29	45	31	45	32	45	33	45
	WSK060A4	414-506	14	20	16	20	15	20	17	20
	WSK060AW	517-632	13	20	14	20	14	20	15	20
	WHK060A3	187-253	31	45	—	—	36	50	—	—
	WHK060A4	414-506	16	20	—	—	19	25	—	—
	WHK060AW	517-632	13	15	—	—	15	20	—	—
5 HGRH	WHK060A3	187-253	34	45	—	—	40	50	—	—
	WHK060A4	414-506	17	20	—	—	21	25	—	—
6	WS/HK072A3	187-253	38	50	—	—	44	50	—	—
	WS/HK072A4	414-506	20	25	—	—	23	25	—	—
	WS/HK072AW	517-632	17	20	—	—	20	25	—	—
6 HGRH	WS/HK072A3	187-253	41	50	—	—	47	60	—	—
	WS/HK072A4	414-506	21	25	—	—	24	30	—	—
7.5	WS/HK090A3	187-253	43	50	—	—	48	60	—	—
	WS/HK090A4	414-506	22	25	—	—	25	30	—	—
	WS/HK090AW	517-632	18	25	—	—	21	25	—	—
7.5 HGRH	WS/HK090A3	187-253	46	60	—	—	52	60	—	—
	WS/HK090A4	414-506	23	30	—	—	27	30	—	—
8.5	WS/HK102A3	187-253	56	70	—	—	62	80	—	—
	WS/HK102A4	414-506	27	35	—	—	30	40	—	—
	WS/HK102AW	517-632	21	25	—	—	23	30	—	—

Table 169. Unit wiring — heat pump (continued)

Tons	Unit Model Number	Voltage Range	Standard Indoor Fan Motor		Oversized/High Static Indoor Fan Motor		Optional Power Exhaust Standard Indoor Fan Motor		Optional Power Exhaust Oversized/High Static Indoor Fan Motor	
			MCA	Max Fuse Size or Max Circuit Breaker	MCA	Max Fuse Size or Max Circuit Breaker	MCA	Max Fuse Size or Max Circuit Breaker	MCA	Max Fuse Size or Max Circuit Breaker
10	WSK120B3	187-253	60	80	62	80	66	90	68	90
	WSK120B4	414-506	31	40	32	45	34	45	35	45
	WSK120BW	517-632	24	30	24	30	26	35	27	35
	WHK120A3	187-253	62	80	—	—	68	90	—	—
	WHK120A4	414-506	32	45	—	—	35	45	—	—
	WHK120AW	517-632	25	35	—	—	27	35	—	—
12.5	WS/HK150A3	187-253	78	100	—	—	84	110	—	—
	WS/HK150A4	414-506	40	50	—	—	43	50	—	—
	WS/HK150AW	517-632	30	40	—	—	33	40	—	—
15	WS/HK180A3	187-253	84	110	—	—	89	110	—	—
	WS/HK180A4	414-506	42	50	—	—	45	60	—	—
	WS/HK180AW	517-632	34	45	—	—	36	45	—	—
17.5	WS/HK210A3	187-253	95	125	—	—	101	125	—	—
	WS/HK210A4	414-506	47	60	—	—	51	60	—	—
	WS/HK210AW	517-632	38	50	—	—	41	50	—	—
20	WS/HK240A3	187-253	108	150	—	—	114	150	—	—
	WS/HK240A4	414-506	55	70	—	—	58	80	—	—
	WS/HK240AW	517-632	40	50	—	—	43	50	—	—
25	WS/HK300A3	187-253	118	150	123	150	124	150	128	175
	WS/HK300A4	414-506	59	80	61	80	62	80	64	80
	WS/HK300AW	517-632	42	50	44	60	45	60	46	60

Table 170. Unit wiring with electric heat — heat pump

Tons	Unit Model Number	Heater Model Number	Heater kW Rating	Control Stages or SCR	Standard Indoor Fan Motor[a]		Oversized/High Static Indoor Fan Motor		Optional Power Exhaust Standard Indoor Fan Motor		Optional Power Exhaust Oversized/High Static Indoor Fan Motor	
					MCA	Max Fuse Size or Max Circuit Breaker	MCA	Max Fuse Size or Max Circuit Breaker	MCA	Max Fuse Size or Max Circuit Breaker	MCA	Max Fuse Size or Max Circuit Breaker
208/230 Volts Three Phase												
3	WSK036A3	FIAEHWA306*	6	1	39/41	45/45	41/43	45/50	41/43	45/50	43/46	50/50
		FIAEHWA312*	12	2	54/59	60/60	57/62	60/70	56/61	60/70	59/64	60/70
		FIAEHWA318*	18	2	68/75	70/80	71/78	80/80	70/78	70/80	73/80	80/80
	WHK036A3	FIAEHWB306*	6	1	39/41	45/45	—	—	44/47	50/50	—	—
		FIAEHWB312*	12	2	54/59	60/60	—	—	60/65	60/70	—	—
		FIAEHWB318*	18	2	70/77	70/80	—	—	76/83	80/90	—	—

Table 170. Unit wiring with electric heat — heat pump (continued)

Tons	Unit Model Number	Heater Model Number	Heater kW Rating	Control Stages or SCR	Standard Indoor Fan Motor[a]		Oversized/High Static Indoor Fan Motor		Optional Power Exhaust Standard Indoor Fan Motor		Optional Power Exhaust Oversized/High Static Indoor Fan Motor	
					MCA	Max Fuse Size or Max Circuit Breaker	MCA	Max Fuse Size or Max Circuit Breaker	MCA	Max Fuse Size or Max Circuit Breaker	MCA	Max Fuse Size or Max Circuit Breaker
3 HGRH	WHK036A3	FIAEHWB306*	6	1	40/43	45/45	—	—	46/49	50/50	—	—
		FIAEHWB312*	12	2	56/61	60/70	—	—	62/67	70/70	—	—
		FIAEHWB318*	18	2	72/79	80/80	—	—	77/85	80/90	—	—
4	WSK048A3	FIAEHWA306*	6	1	43/45	50/50	44/47	50/50	45/48	50/50	46/49	50/50
		FIAEHWA312*	12	2	59/63	60/70	60/65	60/70	61/66	70/70	62/67	70/70
		FIAEHWA318*	18	2	73/80	80/80	74/81	80/90	75/82	80/90	76/83	80/90
	WHK048A3	FIAEHWB306*	6	1	44/46	50/50	—	—	49/52	50/60	—	—
		FIAEHWB312*	12	2	59/64	60/70	—	—	65/70	70/70	—	—
		FIAEHWB318*	18	2	75/82	80/90	—	—	81/82	90/90	—	—
4 HGRH	WHK048A3	FIAEHWB306*	6	1	47/50	50/50	—	—	53/56	60/60	—	—
		FIAEHWB312*	12	2	63/68	70/70	—	—	69/74	70/80	—	—
		FIAEHWB318*	18	2	79/86	80/90	—	—	84/92	90/100	—	—
5	WSK060A3	FIAEHWA306*	6	1	47/50	50/50	—	-	53/56	60/60	-	-
		FIAEHWA312*	12	2	61/66	70/70	62/67	70/70	63/68	70/70	64/69	70/70
		FIAEHWA318*	18	2	75/82	80/90	76/83	80/90	77/84	80/90	78/85	80/90
		FIAEHWA323*	23	2	89/99	90/100	91/100	100/100	92/101	100/110	93/102	100/110
	WHK060A3	FIAEHWB306*	6	1	46/49	50/60	—	—	52/54	60/60	—	—
		FIAEHWB312*	12	2	62/67	70/70	—	—	68/72	70/80	—	—
		FIAEHWB318*	18	2	77/85	80/90	—	—	83/90	90/90	—	—
		FIAEHWB327*	27	2	101/112	110/125	—	—	107/117	110/125	—	—
5 HGRH	WHK060A3	FIAEHWB306*	6	1	50/53	60/60	—	—	56/58	60/60	—	—
		FIAEHWB312*	12	2	66/71	70/80	—	—	71/76	80/80	—	—
		FIAEHWB318*	18	2	77/85	80/90	—	—	83/90	90/90	—	—
		FIAEHWB327*	27	2	105/116	110/125	—	—	111/121	125/125	—	—
6	WS/HK072A3	FIAEHWB309*	9	1	62/66	70/70	—	—	68/71	70/80	—	—
		FIAEHWB318*	18	2	85/93	90/100	—	—	91/98	100/100	—	—
		FIAEHWB327*	27	2	109/120	110/125	—	—	115/125	125/125	—	—
		FIAEHWB336*	36	2	132/147	150/150	—	—	138/152	150/175	—	—
6 HGRH	WS/HK072A3	FIAEHWB309*	9	1	65/69	70/70	—	—	71/74	80/80	—	—
		FIAEHWB318*	18	2	88/96	90/100	—	—	94/101	100/110	—	—
		FIAEHWB327*	27	2	112/123	125/125	—	—	118/128	125/150	—	—
		FIAEHWB336*	36	2	135/150	150/150	—	—	141/155	150/175	—	—

Table 170. Unit wiring with electric heat — heat pump (continued)

Tons	Unit Model Number	Heater Model Number	Heater kW Rating	Control Stages or SCR	Standard Indoor Fan Motor[a]		Oversized/High Static Indoor Fan Motor		Optional Power Exhaust Standard Indoor Fan Motor		Optional Power Exhaust Oversized/High Static Indoor Fan Motor	
					MCA	Max Fuse Size or Max Circuit Breaker	MCA	Max Fuse Size or Max Circuit Breaker	MCA	Max Fuse Size or Max Circuit Breaker	MCA	Max Fuse Size or Max Circuit Breaker
7.5	WS/HK090A3	FIAEHWB309*	9	1	66/70	70/80	—	—	72/75	80/80	—	—
		FIAEHWB318*	18	2	90/97	90/100	—	—	95/102	100/110	—	—
		FIAEHWB327*	27	2	113/124	125/125	—	—	119/130	125/150	—	—
		FIAEHWB336*	36	2	136/151	150/175	—	—	142/157	150/175	—	—
7.5 HGRH	WS/HK090A3	FIAEHWB309*	9	1	70/73	80/80	—	—	75/79	80/80	—	—
		FIAEHWB318*	18	2	93/100	100/100	—	—	99/106	100/110	—	—
		FIAEHWB327*	27	2	116/127	125/150	—	—	122/133	125/150	—	—
		FIAEHWB336*	36	2	140/154	150/175	—	—	146/160	150/175	—	—
8.5	WS/HK102A3	FIAEHWB309*	9	1	80/83	90/90	—	—	85/89	100/100	—	—
		FIAEHWB318*	18	2	103/110	110/110	—	—	109/116	110/125	—	—
		FIAEHWB327*	27	2	126/137	150/150	—	—	132/143	150/150	—	—
		FIAEHWB336*	36	2	150/164	150/175	—	—	156/170	175/175	—	—
10	WSK120B3	FIAEHWB318*	18	2	107/114	110/125	109/117	110/125	113/120	125/125	115/122	125/125
		FIAEHWB327*	27	2	131/141	150/150	133/144	150/150	136/147	150/150	139/149	150/150
		FIAEHWB336*	36	2	154/169	175/175	156/171	175/175	160/174	175/175	162/176	175/200
		FIAEHWB354*	54	2	201/190	225/200	203/192	225/200	207/196	225/200	209/198	225/200
	WHK120A3	FIAEHWC318*	18	1	109/117	110/125	—	—	115/122	125/125	—	—
		FIAEHWC327*	27	2	133/144	150/150	—	—	139/149	150/150	—	—
		FIAEHWC336*	36	2	156/171	175/175	—	—	162/176	175/200	—	—
		FIAEHWC354*	54	2	203/192	225/200	—	—	209/198	225/200	—	—
12.5	WS/HK150A3	FIAEHWD318*	18	1	125/133	125/150	—	—	131/138	150/150	—	—
		FIAEHWD336*	36	2	172/187	175/200	—	—	178/192	200/200	—	—
		FIAEHWD354*	54	2	219/208	225/225	—	—	225/214	225/225	—	—
15	WS/HK180A3	FIAEHWD318*	18	1	130/138	150/150	—	—	136/143	150/150	—	—
		FIAEHWD336*	36	2	177/192	200/200	—	—	183/198	200/200	—	—
		FIAEHWD354*	54	2	224/213	225/225	—	—	230/219	250/250	—	—
17.5	WS/HK210A3	FIAEHWD336*	36	2	189/203	200/225	—	—	194/209	200/225	—	—
		FIAEHWD354*	54	2	236/225	250/250	—	—	241/230	250/250	—	—
		FIAEHWD372*	72	2	245/268	250/300	—	—	251/274	300/300	—	—
20	WS/HK240A3	FIAEHWD336*	36	2	202/216	225/225	—	—	208/222	225/225	—	—
		FIAEHWD354*	54	2	249/238	250/250	—	—	255/244	300/250	—	—
		FIAEHWD372*	72	2	258/281	300/300	—	—	264/287	300/300	—	—

Table 170. Unit wiring with electric heat — heat pump (continued)

Tons	Unit Model Number	Heater Model Number	Heater kW Rating	Control Stages or SCR	Standard Indoor Fan Motor[a]		Oversized/High Static Indoor Fan Motor		Optional Power Exhaust Standard Indoor Fan Motor		Optional Power Exhaust Oversized/High Static Indoor Fan Motor	
					MCA	Max Fuse Size or Max Circuit Breaker	MCA	Max Fuse Size or Max Circuit Breaker	MCA	Max Fuse Size or Max Circuit Breaker	MCA	Max Fuse Size or Max Circuit Breaker
25	WS/HK300A3	FIAEHWD336*	36	2	212/226	225/250	216/231	225/250	218/232	225/250	222/237	250/250
		FIAEHWD354*	54	2	259/248	300/250	263/253	300/300	265/254	300/300	269/258	300/300
		FIAEHWD372*	72	2	268/291	300/300	273/296	300/300	274/297	300/300	278/302	300/350
460 Volts Three Phase												
3	WSK036A4	FIAEHWA406*	6	1	19	20	22	25	20	20	23	25
		FIAEHWA412*	12	2	28	30	31	35	29	30	32	35
		FIAEHWA418*	18	2	36	40	39	40	37	40	40	40
	WHK036A4	FIAEHWB406*	6	1	22	25	—	—	25	25	—	—
		FIAEHWB412*	12	2	31	35	—	—	34	35	—	—
		FIAEHWB418*	18	2	40	40	—	—	43	45	—	—
3 HGRH	WHK036A4	FIAEHWB406*	6	1	23	25	—	—	26	30	—	—
		FIAEHWB412*	12	2	32	35	—	—	35	35	—	—
		FIAEHWB418*	18	2	41	45	—	—	44	45	—	—
4	WSK048A4	FIAEHWA406*	6	1	21	25	23	25	22	25	24	25
		FIAEHWA412*	12	2	30	30	32	35	31	35	33	35
		FIAEHWA418*	18	2	39	40	40	40	40	40	41	45
	WHK048A4	FIAEHWB406*	6	1	25	30	—	—	28	30	—	—
		FIAEHWB412*	12	2	34	35	—	—	37	40	—	—
		FIAEHWB418*	18	2	43	45	—	—	46	50	—	—
4 HGRH	WHK048A4	FIAEHWB406*	6	1	26	30	—	—	29	30	—	—
		FIAEHWB412*	12	2	35	35	—	—	38	40	—	—
		FIAEHWB418*	18	2	44	45	—	—	48	50	—	—
5	WSK060A4	FIAEHWA406*	6	1	21	25	23	25	22	25	24	25
		FIAEHWA412*	12	2	32	35	34	35	33	35	35	35
		FIAEHWA418*	18	2	40	40	42	45	41	45	43	45
		FIAEHWA423*	23	2	48	50	50	50	49	50	51	60
	WHK060A4	FIAEHWB406*	6	1	25	30	—	—	28	30	—	—
		FIAEHWB412*	12	2	34	35	—	—	37	40	—	—
		FIAEHWB418*	18	2	43	45	—	—	46	50	—	—
		FIAEHWB427*	27	2	56	60	—	—	60	60	—	—

Table 170. Unit wiring with electric heat — heat pump (continued)

Tons	Unit Model Number	Heater Model Number	Heater kW Rating	Control Stages or SCR	Standard Indoor Fan Motor[a]		Oversized/High Static Indoor Fan Motor		Optional Power Exhaust Standard Indoor Fan Motor		Optional Power Exhaust Oversized/High Static Indoor Fan Motor	
					MCA	Max Fuse Size or Max Circuit Breaker	MCA	Max Fuse Size or Max Circuit Breaker	MCA	Max Fuse Size or Max Circuit Breaker	MCA	Max Fuse Size or Max Circuit Breaker
5 HGRH	WHK060A4	FIAEHWB406*	6	1	26	30	—	—	30	35	—	—
		FIAEHWB412*	12	2	35	35	—	—	38	40	—	—
		FIAEHWB418*	18	2	44	45	—	—	48	50	—	—
		FIAEHWB427*	27	2	58	60	—	—	61	70	—	—
6	WS/HK072A4	FIAEHWB409*	9	1	33	35	—	—	36	40	—	—
		FIAEHWB418*	18	2	47	50	—	—	50	50	—	—
		FIAEHWB427*	27	2	60	60	—	—	63	70	—	—
		FIAEHWB436*	36	2	74	80	—	—	77	80	—	—
6 HGRH	WS/HK072A4	FIAEHWB409*	9	1	35	35	—	—	38	40	—	—
		FIAEHWB418*	18	2	48	50	—	—	51	60	—	—
		FIAEHWB427*	27	2	62	70	—	—	65	70	—	—
		FIAEHWB436*	36	2	75	80	—	—	78	80	—	—
7.5	WS/HK090A4	FIAEHWB409*	9	1	35	40	—	—	39	40	—	—
		FIAEHWB418*	18	2	49	50	—	—	52	60	—	—
		FIAEHWB427*	27	2	62	70	—	—	66	70	—	—
		FIAEHWB436*	36	2	76	80	—	—	79	80	—	—
7.5 HGRH	WS/HK090A4	FIAEHWB409*	9	1	37	40	—	—	40	45	—	—
		FIAEHWB418*	18	2	50	50	—	—	54	60	—	—
		FIAEHWB427*	27	2	64	70	—	—	67	70	—	—
		FIAEHWB436*	36	2	78	80	—	—	81	90	—	—
8.5	WS/HK102A4	FIAEHWB409*	9	1	41	45	—	—	44	50	—	—
		FIAEHWB418*	18	2	54	60	—	—	57	60	—	—
		FIAEHWB427*	27	2	68	70	—	—	71	80	—	—
		FIAEHWB436*	36	2	81	90	—	—	85	90	—	—
10	WSK120B4	FIAEHWB418*	18	2	58	60	59	60	61	70	62	70
		FIAEHWB427*	27	2	72	80	73	80	75	80	76	80
		FIAEHWB436*	36	2	85	90	86	90	89	90	89	90
		FIAEHWB454*	54	2	96	100	97	110	99	110	100	110
	WS/HK120A4	FIAEHWC418*	18	1	59	60	—	—	62	70	—	—
		FIAEHWC427*	27	2	73	80	—	—	76	80	—	—
		FIAEHWC436*	36	2	86	90	—	—	89	90	—	—
		FIAEHWC454*	54	2	97	110	—	—	100	110	—	—

Table 170. Unit wiring with electric heat — heat pump (continued)

Tons	Unit Model Number	Heater Model Number	Heater kW Rating	Control Stages or SCR	Standard Indoor Fan Motor[a]		Oversized/High Static Indoor Fan Motor		Optional Power Exhaust Standard Indoor Fan Motor		Optional Power Exhaust Oversized/High Static Indoor Fan Motor	
					MCA	Max Fuse Size or Max Circuit Breaker	MCA	Max Fuse Size or Max Circuit Breaker	MCA	Max Fuse Size or Max Circuit Breaker	MCA	Max Fuse Size or Max Circuit Breaker
12.5	WS/HK150A4	FIAEHWD418*	18	1	67	70	—	—	70	70	—	—
		FIAEHWD436*	36	2	94	100	—	—	97	100	—	—
		FIAEHWD454*	54	2	105	110	—	—	108	110	—	—
15	WS/HK180A4	FIAEHWD418*	18	1	69	70	—	—	73	80	—	—
		FIAEHWD436*	36	2	96	100	—	—	100	100	—	—
		FIAEHWD454*	54	2	107	110	—	—	110	125	—	—
17.5	WS/HK210A4	FIAEHWD436*	36	2	102	110	—	—	105	110	—	—
		FIAEHWD454*	54	2	112	125	—	—	116	125	—	—
		FIAEHWD472*	72	2	134	150	—	—	137	150	—	—
20	WS/HK240A4	FIAEHWD436*	36	2	109	110	—	—	112	125	—	—
		FIAEHWD454*	54	2	120	125	—	—	123	125	—	—
		FIAEHWD472*	72	2	142	150	—	—	145	150	—	—
25	WS/HK300A4	FIAEHWD436*	36	2	113	125	115	125	116	125	118	125
		FIAEHWD454*	54	2	124	125	126	150	127	150	129	150
		FIAEHWD472*	72	2	145	150	147	150	149	150	151	175
575 Volts Three Phase												
3	WSK036AW	FIAEHWAW06*	6	1	17	20	18	20	18	20	19	20
		FIAEHWAW12*	12	2	24	25	25	25	25	25	26	30
		FIAEHWAW18*	18	2	31	35	32	35	32	35	33	35
3	WHK036AW	FIAEHWBW06*	6	1	16	20	—	—	19	20	—	—
		FIAEHWBW12*	12	2	24	25	—	—	26	30	—	—
		FIAEHWBW18*	18	2	31	35	—	—	33	35	—	—
4	WSK048AW	FIAEHWAW06*	6	1	20	20	21	25	21	25	22	25
		FIAEHWAW12*	12	2	27	30	28	30	28	30	29	30
		FIAEHWAW18*	18	2	33	35	34	35	34	35	35	35
4	WHK048AW	FIAEHWBW06*	6	1	19	20	—	—	21	25	—	—
		FIAEHWBW12*	12	2	26	30	—	—	28	30	—	—
		FIAEHWBW18*	18	2	33	35	—	—	35	35	—	—
5	WSK060AW	FIAEHWAW06*	6	1	20	20	21	25	21	25	22	25
		FIAEHWAW12*	12	2	28	30	29	30	29	30	30	30
		FIAEHWAW18*	18	2	34	35	35	35	35	35	36	40
		FIAEHWAW23*	23	2	41	45	42	45	42	45	43	45

Table 170. Unit wiring with electric heat — heat pump (continued)

Tons	Unit Model Number	Heater Model Number	Heater kW Rating	Control Stages or SCR	Standard Indoor Fan Motor[a]		Oversized/High Static Indoor Fan Motor		Optional Power Exhaust Standard Indoor Fan Motor		Optional Power Exhaust Oversized/High Static Indoor Fan Motor	
					MCA	Max Fuse Size or Max Circuit Breaker	MCA	Max Fuse Size or Max Circuit Breaker	MCA	Max Fuse Size or Max Circuit Breaker	MCA	Max Fuse Size or Max Circuit Breaker
5	WHK060AW	FIAEHWBW06*	6	1	20	20	—	—	22	25	—	—
		FIAEHWBW12*	12	2	27	30	—	—	29	30	—	—
		FIAEHWBW18*	18	2	34	35	—	—	37	40	—	—
		FIAEHWBW27*	27	2	45	45	—	—	47	50	—	—
6	WS/HK072AW	FIAEHWBW09*	9	1	28	30	—	—	30	30	—	—
		FIAEHWBW18*	18	2	39	40	—	—	41	45	—	—
		FIAEHWBW27*	27	2	50	50	—	—	52	60	—	—
		FIAEHWBW36*	36	2	61	70	—	—	63	70	—	—
7.5	WS/HK090AW	FIAEHWBW09*	9	1	29	30	—	—	32	35	—	—
		FIAEHWBW18*	18	2	40	40	—	—	42	45	—	—
		FIAEHWBW27*	27	2	51	60	—	—	53	60	—	—
		FIAEHWBW36*	36	2	62	70	—	—	64	70	—	—
8.5	WS/HK102AW	FIAEHWBW09*	9	1	32	35	—	—	34	40	—	—
		FIAEHWBW18*	18	2	43	45	—	—	45	45	—	—
		FIAEHWBW27*	27	2	54	60	—	—	56	60	—	—
		FIAEHWBW36*	36	2	64	70	—	—	67	70	—	—
10	WSK120BW	FIAEHWBW18*	18	2	45	50	46	50	47	50	48	50
		FIAEHWBW27*	27	2	56	60	57	60	58	60	59	60
		FIAEHWBW36*	36	2	67	70	68	70	69	70	70	70
		FIAEHWBW54*	54	2	76	80	76	80	78	80	79	80
	WS/HK120AW	FIAEHWCW18*	18	1	47	50	—	—	49	50	—	—
		FIAEHWCW27*	27	2	57	60	—	—	60	60	—	—
		FIAEHWCW36*	36	2	68	70	—	—	71	80	—	—
		FIAEHWCW54*	54	2	77	80	—	—	79	80	—	—
12.5	WS/HK150AW	FIAEHWDW18*	18	1	52	60	—	—	54	60	—	—
		FIAEHWDW36*	36	2	74	80	—	—	76	80	—	—
		FIAEHWDW54*	54	2	82	90	—	—	85	90	—	—
15	WS/HK180AW	FIAEHWDW18*	18	1	55	60	—	—	58	60	—	—
		FIAEHWDW36*	36	2	77	80	—	—	79	80	—	—
		FIAEHWDW54*	54	2	86	90	—	—	88	90	—	—
17.5	WS/HK210AW	FIAEHWDW36*	36	2	82	90	—	—	84	90	—	—
		FIAEHWDW54*	54	2	90	100	—	—	92	100	—	—
		FIAEHWDW72*	72	2	108	110	—	—	110	110	—	—
20	WS/HK240AW	FIAEHWDW36*	36	2	84	90	—	—	86	90	—	—
		FIAEHWDW54*	54	2	92	100	—	—	95	100	—	—
		FIAEHWDW72*	72	2	110	110	—	—	112	125	—	—

Table 170. Unit wiring with electric heat — heat pump (continued)

Tons	Unit Model Number	Heater Model Number	Heater kW Rating	Control Stages or SCR	Standard Indoor Fan Motor[a]		Oversized/High Static Indoor Fan Motor		Optional Power Exhaust Standard Indoor Fan Motor		Optional Power Exhaust Oversized/High Static Indoor Fan Motor	
					MCA	Max Fuse Size or Max Circuit Breaker	MCA	Max Fuse Size or Max Circuit Breaker	MCA	Max Fuse Size or Max Circuit Breaker	MCA	Max Fuse Size or Max Circuit Breaker
25	WS/HK300AW	FIAEHWDW36*	36	2	86	90	87	90	88	90	89	90
		FIAEHWDW54*	54	2	94	110	96	110	97	110	98	110
		FIAEHWDW72*	72	2	112	125	113	125	114	125	115	125

Note: Kit used with Title 24/SZVAV models.

[a] The standard motor is a multispeed, direct drive motor.

Table 171. Electrical characteristics — compressor motor and condenser motor — heat pump

Tons	Unit Model Number	No.	Compressor Motors					No.	Condenser Fan Motor				
			Volts	Phase	rpm	Amps[a]			Volts	Phase	hp	Amps	
						RLA	LRA					FLA	LRA
3	WSK036A3	1	208/230	3	3500	12.5	97.5	1	208/230	3	0.25	1.1	3.6
	WSK036A4	1	460	3	3500	5.9	44.3	1	460	3	0.25	0.6	1.8
	WSK036AW	1	575	3	3500	4.6	27.1	1	575	3	0.25	0.5	1.4
	WHK036A3	1	208/230	3	—	10.2	82	1	208/230	3	0.25	1.1	3.6
	WHK036A4	1	460	3	—	5.6	44.3	1	460	3	0.25	0.6	1.8
	WHK036AW	1	575	3	—	4.1	28.7	1	575	3	0.25	0.5	1.4
4	WSK048A3	1	208/230	3	3500	14.8	120.4	1	208/230	3	0.33	1.4	4.6
	WSK048A4	1	460	3	3500	7	49.4	1	460	3	0.33	0.7	2.3
	WSK048AW	1	575	3	3500	6.7	41	1	575	3	0.33	0.6	1.8
	WHK048A3	1	208/230	3	—	13.8	112	1	208/230	3	0.40	1.4	5.2
	WHK048A4	1	460	3	—	7.8	61.8	1	460	3	0.40	0.7	2.6
	WHK048AW	1	575	3	—	5.6	39	1	575	3	0.40	0.6	2.1
5	WSK060A3	1	208/230	3	3500	16.5	156.4	1	208/230	3	0.33	1.4	4.6
	WSK060A4	1	460	3	3500	8.1	69	1	460	3	0.33	0.7	2.3
	WSK060AW	1	575	3	3500	7.4	47.8	1	575	3	0.33	0.6	1.8
	WHK060A3	1	208/230	3	—	15.9	161	1	208/230	3	0.40	1.4	5.2
	WHK060A4	1	460	3	—	7.9	58	1	460	3	0.40	0.7	2.6
	WHK060AW	1	575	3	—	6.7	47.8	1	575	3	0.40	0.6	2.1
6	WS/HK072A3	2	208/230	3	3500	14.8/7.4	120.4/58.7	1	208/230	3	0.70	3.3	12.3
	WS/HK072A4	2	460	3	3500	7.0/4.2	49.4/26.3	1	460	3	0.70	1.5	6.1
	WS/HK072AW	2	575	3	3500	6.7/3.8	41.0/24.0	1	575	3	0.70	1.4	5.1
6 HGRH	WS/HK072A3	2	208/230	3	3500	14.8/7.4	120.4/58.7	1	208/230	1	0.75	6.3	—
	WS/HK072A4	2	460	3	3500	7.0/4.2	49.4/26.3	1	460	1	0.75	3.0	—
7.5	WS/HK090A3	2	208/230	3	3500	16.5/9.9	156.4/67.7	1	208/230	3	0.75	2.8	10.4
	WS/HK090A4	2	460	3	3500	8.1/5.2	69.0/38.1	1	460	3	0.75	1.4	5.2
	WS/HK090AW	2	575	3	3500	7.4/4.4	47.8/27.7	1	575	3	0.75	1.1	4.53
7.5 HGRH	WS/HK090A3	2	208/230	3	3500	16.5/9.9	156.4/67.7	1	208/230	1	0.75	6.3	—
	WS/HK090A4	2	460	3	3500	8.1/5.2	69.0/38.1	1	460	1	0.75	3.0	—

Table 171. Electrical characteristics — compressor motor and condenser motor — heat pump (continued)

Tons	Unit Model Number	No.	Compressor Motors					No.	Condenser Fan Motor				
			Volts	Phase	rpm	Amps[a]			Volts	Phase	hp	Amps	
						RLA	LRA					FLA	LRA
8.5	WS/HK102A3	2	208/230	3	3500	21.8/13.2	156.5/97.5	1	208/230	1	0.75	6.3	—
	WS/HK102A4	2	460	3	3500	10.5/5.9	74.8/44.3	1	460	1	0.75	3.0	—
	WS/HK102AW	2	575	3	3500	8.9/5.2	47.8/27.1	1	575	3	0.75	1.1	4.53
10	WSK120B3	2	208/230	3	3500	25.2/13.2	210.0/97.5	1	208/230	1	0.75	6.3	—
	WSK120B4	2	460	3	3500	13.7/5.9	103.0/44.3	1	460	1	0.75	3.0	—
	WSK120BW	2	575	3	3500	10.8/5.2	78.0/27.1	1	575	3	0.75	1.1	4.53
	WHK120A3	2	208/230	3	3500	25.2/13.2	210.0/97.5	1	208/230	1	0.75	6.3	—
	WHK120A4	2	460	3	3500	13.7/5.9	103.0/44.3	1	460	1	0.75	3.0	—
	WHK120AW	2	575	3	3500	10.8/5.2	78.0/27.1	1	575	3	1.00	1.8	4.53
12.5	WS/HK150A3	2	208/230	3	3500	29.5/14.8	207.5/120.4	2	208/230	3	1.00	4.3	20.0
	WS/HK150A4	2	460	3	3500	14.4/7	100.2/49.4	2	460	3	1.00	2.5	10.1
	WS/HK150AW	2	575	3	3500	10.4/6.7	78/41	2	575	3	1.00	1.9	8.0
15	WS/HK180A3	2	208/230	3	3500	32.3/16.5	255/156.4	2	208/230	3	1.00	4.3	20.0
	WS/HK180A4	2	460	3	3500	15.5/8.1	123/69	2	460	3	1.00	2.5	10.1
	WS/HK180AW	2	575	3	3500	12.4/7.4	93.7/47.8	2	575	3	1.00	1.9	8.0
17.5	WS/HK210A3	2	208/230	3	3500	37.1/21.8	255/156.5	2	208/230	3	1.00	4.3	20.0
	WS/HK210A4	2	460	3	3500	17.8/10.5	140/74.8	2	460	3	1.00	2.5	10.1
	WS/HK210AW	2	575	3	3500	14.9/8.9	107.6/47.8	2	575	3	1.00	1.9	8.0
20	WS/HK240A3	2	208/230	3	3500	44.5/25.9	270/178.5	2	208/230	3	1.00	4.3	20
	WS/HK240A4	2	460	3	3500	22.4/12.2	147/79.1	2	460	3	1.00	2.5	10.1
	WS/HK240AW	2	575	3	3500	15.8/9.9	109/65	2	575	3	1.00	1.9	8.0
25	WS/HK300A3	2	208/230	3	3500	49.2/30	335.5/190.7	2	208/230	3	1.00	4.3	20.0
	WS/HK300A4	2	460	3	3500	23.8/14.4	141/100.2	2	460	3	1.00	2.5	10.1
	WS/HK300AW	2	575	3	3500	16.7/10.9	109/65	2	575	3	1.00	1.9	8.0

[a] Amp draw for each motor (compressor and condenser fan motor); multiply value by number of motors to determine total amps.

Table 172. Electrical characteristics — indoor fan motor — heat pump

Tons	Unit Model Number	No.	Volts	Phase	hp	Amps[a]	
						FLA	LRA
3	WSK036A3	1	208/230	1	0.75	5.7	—
	WSK036A4	1	460	1	0.75	1.7	—
	WSK036AW	1	575	1	1	2.9	—
	WHK036A3	1	208/230	3	3	8.8	—
	WHK036A4	1	460	3	3	4.6	—
	WHK036AW	1	575	3	3	3.2	—
4	WSK048A3	1	208/230	1	1	6.9	—
	WSK048A4	1	460	1	1	2.4	—
	WSK048AW	1	575	1	1	2.9	—
	WHK048A3	1	208/230	3	3	8.8	—
	WHK048A4	1	460	3	3	4.6	—
	WHK048AW	1	575	3	3	3.2	—

Table 172. Electrical characteristics — indoor fan motor — heat pump (continued)

Tons	Unit Model Number	No.	Volts	Phase	hp	Amps[a]	
						FLA	LRA
5	WSK060A3	1	208/230	1	1	6.9	—
	WSK060A4	1	460	1	1	2.4	—
	WSK060AW	1	575	1	1	2.9	—
	WHK060A3	1	208/230	3	3	8.8	—
	WHK060A4	1	460	3	3	4.6	—
	WHK060AW	1	575	3	3	3.2	—
6	WS/HK072A3	1	208/230	3	3	8.8	—
	WS/HK072A4	1	460	3	3	4.6	—
	WS/HK072AW	1	575	3	3	3.2	—
7.5	WS/HK090A3	1	208/230	3	3	8.8	—
	WS/HK090A4	1	460	3	3	4.6	—
	WS/HK090AW	1	575	3	3	3.2	—
8.5	WS/HK102A3	1	208/230	3	3	8.8	—
	WS/HK102A4	1	460	3	3	4.6	—
	WS/HK102AW	1	575	3	3	3.2	—
10	WSK120B3	1	208/230	3	3	8.8	—
	WSK120B4	1	460	3	3	4.6	—
	WSK120BW	1	575	3	3	3.2	—
	WHK120A3	1	208/230	3	5	11	—
	WHK120A4	1	460	3	5	5.5	—
	WHK120AW	1	575	3	5	3.9	—
12.5	WS/HK150A3	2	208/230	3	3	8.8	—
	WS/HK150A4	2	460	3	3	4.6	—
	WS/HK150AW	2	575	3	3	3.2	—
15	WS/HK180A3	2	208/230	3	3	8.8	—
	WS/HK180A4	2	460	3	3	4.6	—
	WS/HK180AW	2	575	3	3	3.2	—
17.5	WS/HK210A3	2	208/230	3	3	8.8	—
	WS/HK210A4	2	460	3	3	4.6	—
	WS/HK210AW	2	575	3	3	3.2	—
20	WS/HK240A3	2	208/230	3	3	8.8	—
	WS/HK240A4	2	460	3	3	4.6	—
	WS/HK240AW	2	575	3	3	3.2	—
25	WS/HK300A3	2	208/230	3	3	8.8	—
	WS/HK300A4	2	460	3	3	4.6	—
	WS/HK300AW	2	575	3	3	3.2	—

[a] Amp draw for each motor (compressor and condenser fan motor); multiply value by number of motors to determine total amps.

Table 173. Electrical characteristics — oversized indoor fan motor — heat pump

Tons	Unit Model Number	No.	Volts	Phase	hp	Amps[a]	
						FLA	LRA
3	WSK036A3	1	208/230	1	1.5	8.2	—
	WSK036A4	1	460	1	1.5	4.2	—
	WSK036AW	1	575	1	1.5	3.9	—
4	WSK048A3	1	208/230	1	1.5	8.2	—
	WSK048A4	1	460	1	1.5	4.2	—
	WSK048AW	1	575	1	1.5	3.9	—
5	WSK060A3	1	208/230	1	1.5	8.2	—
	WSK060A4	1	460	1	1.5	4.2	—
	WSK060AW	1	575	1	1.5	3.9	—
10	WSK120B3	1	208/230	3	5	11	—
	WSK120B4	1	460	3	5	5.5	—
	WSK120BW	1	575	3	5	3.9	—
25	WS/HK300A3	2	208/230	3	5	11	—
	WS/HK300A4	2	460	3	5	5.5	—
	WS/HK300AW	2	575	3	5	3.9	—

[a] Amp draw for each motor (compressor and condenser fan motor); multiply value by number of motors to determine total amps.

Table 174. Electrical characteristics — power exhaust — heat pump

Tons	Volts	Phase	hp	rpm	FLA	LRA
3-5T, Std Eff	208/230	1	0.33	1075	2.2	3.9
3-5T, Std Eff	460	1	0.33	1075	1.1	2.0
3-5T, Std Eff	575	1	0.33	1075	1.0	1.8
3-5T, High Eff	208/230	1	0.87	1075	5.7	13.6
3-5T, High Eff	460	1	0.87	1075	3.3	7.2
3-5T, High Eff	575	1	0.80	1075	2.3	5.8
6-10T	208/230	1	0.87	1075	5.7	13.6
6-10T	460	1	0.87	1075	3.3	7.2
6-10T	575	1	0.80	1075	2.3	5.8
12.5-25T	208/230	1	0.87	1075	5.7	13.6
12.5-25T	460	1	0.87	1075	3.3	7.2
12.5-25T	575	1	0.80	1075	2.3	5.8

Note: For 6 to 10 ton models, rpm = two speed.

Table 175. Unit wiring — dual fuel

Tons	Unit Model Number	Voltage Range	Standard Indoor Fan Motor		Oversized/High Static Indoor Fan Motor		Optional Power Exhaust Standard Indoor Fan Motor		Optional Power Exhaust Oversized/High Static Indoor Fan Motor	
			MCA	Max Fuse Size or Max Circuit Breaker	MCA	Max Fuse Size or Max Circuit Breaker	MCA	Max Fuse Size or Max Circuit Breaker	MCA	Max Fuse Size or Max Circuit Breaker
3	DSK036A3	187-253	23	30	25	35	25	35	28	35
	DSK036A4	414-506	10	15	13	15	11	15	14	15
	DSK036AW	517-632	10	15	11	15	11	15	12	15
	DHK036A3	187-253	23	30	—	—	29	35	—	—
	DHK036A4	414-506	13	15	—	—	16	20	—	—
	DHK036AW	517-632	9	15	—	—	12	15	—	—
3 HGRH	DHK036A3	187-253	25	30	—	—	31	40	—	—
	DHK036A4	414-506	14	15	—	—	17	20	—	—
4	DSK048A3	187-253	27	40	29	40	29	40	31	45
	DSK048A4	414-506	12	15	14	20	13	15	15	20
	DSK048AW	517-632	12	15	13	15	13	15	14	20
	DHK048A3	187-253	28	40	—	—	34	45	—	—
	DHK048A4	414-506	16	20	—	—	19	25	—	—
	DHK048AW	517-632	11	15	—	—	14	15	—	—
4 HGRH	DHK048A3	187-253	32	45	—	—	38	50	—	—
	DHK048A4	414-506	17	20	—	—	20	25	—	—
5	DSK060A3	187-253	29	45	31	45	32	45	33	45
	DSK060A4	414-506	14	20	16	20	15	20	16	20
	DSK060AW	517-632	13	20	15	20	14	20	14	20
	DHK060A3	187-253	31	45	—	—	36	50	—	—
	DHK060A4	414-506	16	20	—	—	19	25	—	—
	DHK060AW	517-632	13	15	—	—	15	20	—	—
5 HGRH	DHK060A3	187-253	34	45	—	—	40	50	—	—
	DHK060A4	414-506	17	20	—	—	21	25	—	—
6	DS/HK072A3	187-253	38	50	—	—	44	50	—	—
	DS/HK072A4	414-506	20	25	—	—	23	25	—	—
	DS/HK072AW	517-632	17	20	—	—	20	25	—	—
6 HGRH	DS/HK072A3	187-253	41	50	—	—	47	60	—	—
	DS/HK072A4	414-506	21	25	—	—	24	30	—	—
7.5	DS/HK090A3	187-253	43	50	—	—	48	60	—	—
	DS/HK090A4	414-506	22	25	—	—	25	30	—	—
	DS/HK090AW	517-632	18	25	—	—	21	25	—	—
7.5 HGRH	DS/HK090A3	187-253	46	60	—	—	52	60	—	—
	DS/HK090A4	414-506	23	30	—	—	27	30	—	—
8.5	DS/HK102A3	187-253	56	70	—	—	62	80	—	—
	DS/HK102A4	414-506	27	35	—	—	31	40	—	—
	DS/HK102AW	517-632	21	25	—	—	23	30	—	—
10	DS/HK120A3	187-253	62	80	—	—	68	90	—	—
	DS/HK120A4	414-506	32	45	—	—	35	45	—	—
	DS/HK120AW	517-632	25	35	—	—	27	35	—	—

Table 175. Unit wiring — dual fuel (continued)

Tons	Unit Model Number	Voltage Range	Standard Indoor Fan Motor		Oversized/High Static Indoor Fan Motor		Optional Power Exhaust Standard Indoor Fan Motor		Optional Power Exhaust Oversized/High Static Indoor Fan Motor	
			MCA	Max Fuse Size or Max Circuit Breaker	MCA	Max Fuse Size or Max Circuit Breaker	MCA	Max Fuse Size or Max Circuit Breaker	MCA	Max Fuse Size or Max Circuit Breaker
12.5	DS/HK150A3	187-253	78	100	—	—	84	110	—	—
	DS/HK150A4	414-506	40	50	—	—	43	50	—	—
	DS/HK150AW	517-632	30	40	—	—	33	40	—	—
15	DS/HK180A3	187-253	84	110	—	—	89	110	—	—
	DS/HK180A4	414-506	42	50	—	—	45	60	—	—
	DS/HK180AW	517-632	34	45	—	—	36	45	—	—
17.5	DS/HK210A3	187-253	95	125	99	125	101	125	105	125
	DS/HK210A4	414-506	47	60	49	60	51	60	53	60
	DS/HK210AW	517-632	38	50	40	50	41	50	42	50
20	DS/HK240A3	187-253	108	150	113	150	114	150	118	150
	DS/HK240A4	414-506	55	70	57	70	58	80	60	80
	DS/HK240AW	517-632	40	50	42	50	43	50	44	50
25	DS/HK300A3	187-253	118	150	123	150	124	150	128	175
	DS/HK300A4	414-506	59	80	61	80	62	80	64	80
	DS/HK300AW	517-632	42	50	44	60	45	60	46	60

Table 176. Electrical characteristics — compressor motor and condenser motor — dual fuel

Tons	Unit Model Number	No.	Compressor Motors					No.	Condenser Fan Motor				
			Volts	Phase	rpm	Amps[a]			Volts	Phase	hp	Amps	
						RLA	LRA					FLA	LRA
3	DSK036A3	1	208/230	3	3500	12.5	97.5	1	208/230	3	0.25	1.1	3.6
	DSK036A4	1	460	3	3500	5.9	44.3	1	460	3	0.25	0.6	1.8
	DSK036AW	1	575	3	3500	4.6	27.1	1	575	3	0.25	0.5	1.4
	DHK036A3	1	208/230	3	3500	10.2	82.0	1	208/230	3	0.25	1.1	3.6
	DHK036A4	1	460	3	3500	5.6	44.3	1	460	3	0.25	0.6	1.8
	DHK036AW	1	575	3	3500	4.1	28.7	1	575	3	0.25	0.5	1.4
4	DSK048A3	1	208/230	3	3500	14.8	120.4	1	208/230	3	0.33	1.4	4.6
	DSK048A4	1	460	3	3500	7.0	49.4	1	460	3	0.33	0.7	2.3
	DSK048AW	1	575	3	3500	6.7	41.0	1	575	3	0.33	0.6	1.8
	DHK048A3	1	208/230	3	3500	13.8	112.0	1	208/230	3	0.40	1.4	5.2
	DHK048A4	1	460	3	3500	7.8	61.8	1	460	3	0.40	0.7	2.6
	DHK048AW	1	575	3	3500	5.6	39.0	1	575	3	0.40	0.6	2.1
5	DSK060A3	1	208/230	3	3500	16.5	156.4	1	208/230	3	0.33	1.4	4.6
	DSK060A4	1	460	3	3500	8.1	69.0	1	460	3	0.33	0.7	2.3
	DSK060AW	1	575	3	3500	7.4	47.8	1	575	3	0.33	0.6	1.8
	DHK060A3	1	208/230	3	3500	15.9	161.0	1	208/230	3	0.40	1.4	5.2
	DHK060A4	1	460	3	3500	7.9	58.0	1	460	3	0.40	0.7	2.6
	DHK060AW	1	575	3	3500	6.7	47.8	1	575	3	0.40	0.6	2.1
6	DS/HK072A3	2	208/230	3	3500	14.8/7.4	120.4/58.7	1	208/230	3	0.70	3.3	12.3
	DS/HK072A4	2	460	3	3500	7.0/4.2	49.4/26.3	1	460	3	0.70	1.5	6.1
	DS/HK072AW	2	575	3	3500	6.7/3.8	41.0/24.0	1	575	3	0.70	1.4	5.1

Table 176. Electrical characteristics — compressor motor and condenser motor — dual fuel (continued)

Tons	Unit Model Number	No.	Compressor Motors					No.	Condenser Fan Motor				
			Volts	Phase	rpm	Amps[a]			Volts	Phase	hp	Amps	
						RLA	LRA					FLA	LRA
6 HGRH	DS/HK072A3	2	208/230	3	3500	14.8/7.4	120.4/58.7	1	208/230	1	0.75	6.3	—
	DS/HK072A4	2	460	3	3500	7.0/4.2	49.4/26.3	1	460	1	0.75	3.0	—
7.5	DS/HK090A3	2	208/230	3	3500	16.5/9.9	156.4/67.7	1	208/230	3	0.75	2.8	10.4
	DS/HK090A4	2	460	3	3500	8.1/5.2	69.0/38.1	1	460	3	0.75	1.4	5.2
	DS/HK090AW	2	575	3	3500	7.4/4.4	47.8/27.7	1	575	3	0.75	1.1	4.53
7.5 HGRH	DS/HK090A3	2	208/230	3	3500	16.5/9.9	156.4/67.7	1	208/230	1	0.75	6.3	—
	DS/HK090A4	2	460	3	3500	8.1/5.2	69.0/38.1	1	460	1	0.75	3.0	—
8.5	DS/HK102A3	2	208/230	3	3500	21.8/13.2	156.5/97.5	1	208/230	1	0.75	6.3	—
	DS/HK102A4	2	460	3	3500	10.5/5.9	74.8/44.3	1	460	1	0.75	3.0	—
	DS/HK102AW	2	575	3	3500	8.9/5.2	47.8/27.1	1	575	3	0.75	1.1	4.53
10	DS/HK120A3	2	208/230	3	3500	25.2/13.2	210.0/97.5	1	208/230	1	0.75	6.3	—
	DS/HK120A4	2	460	3	3500	13.7/5.9	103.0/44.3	1	460	1	0.75	3.0	—
	DS/HK120AW	2	575	3	3500	10.8/5.2	78.0/27.1	1	575	3	1.00	1.8	4.53
12.5	DS/HK150A3	2	208/230	3	3500	29.5/14.8	207.5/120.4	2	208/230	3	1.00	4.3	20.0
	DS/HK150A4	2	460	3	3500	14.4/7	100.2/49.4	2	460	3	1.00	2.5	10.1
	DS/HK150AW	2	575	3	3500	10.4/6.7	78/41	2	575	3	1.00	1.9	8.0
15	DS/HK180A3	2	208/230	3	3500	32.3/16.5	255/156.4	2	208/230	3	1.00	4.3	20.0
	DS/HK180A4	2	460	3	3500	15.5/8.1	123/69	2	460	3	1.00	2.5	10.1
	DS/HK180AW	2	575	3	3500	12.4/7.4	93.7/47.8	2	575	3	1.00	1.9	8.0
17.5	DS/HK210A3	2	208/230	3	3500	37.1/21.8	255/156.5	2	208/230	3	1.00	4.3	20
	DS/HK210A4	2	460	3	3500	17.8/10.5	140/74.8	2	460	3	1.00	2.5	10.1
	DS/HK210AW	2	575	3	3500	14.9/8.9	107.6/47.8	2	575	3	1.00	1.9	8.0
20	DS/HK240A3	2	208/230	3	3500	44.5/25.9	270/178.5	2	208/230	3	1.00	4.3	20.0
	DS/HK240A4	2	460	3	3500	22.4/12.2	147/79.1	2	460	3	1.00	2.5	10.1
	DS/HK240AW	2	575	3	3500	15.8/9.9	109/65	2	575	3	1.00	1.9	8.0
25	DS/HK300A3	2	208/230	3	3500	49.2/30	335.5/190.7	2	208/230	3	1.00	4.3	20.0
	DS/HK300A4	2	460	3	3500	23.8/14.4	141/100.2	2	460	3	1.00	2.5	10.1
	DS/HK300AW	2	575	3	3500	16.7/10.9	109/65	2	575	3	1.00	1.9	8.0

[a] Amp draw for each motor (compressor and condenser fan motor); multiply value by number of motors to determine total amps.

Table 177. Electrical characteristics — indoor fan motor — dual fuel

Tons	Unit Model Number	No.	Volts	Phase	hp	Amps[a]	
						FLA	LRA
3	DSK036A3	1	208/230	1	0.75	5.7	—
	DSK036A4	1	460	1	0.75	1.7	—
	DSK036AW	1	575	1	1	2.9	—
	DHK036A3	1	208/230	3	3	8.8	—
	DHK036A4	1	460	3	3	4.6	—
	DHK036AW	1	575	3	3	3.2	—
4	DSK048A3	1	208/230	1	1	6.9	—
	DSK048A4	1	460	1	1	2.4	—
	DSK048AW	1	575	1	1	2.9	—
	DHK048A3	1	208/230	3	3	8.8	—
	DHK048A4	1	460	3	3	4.6	—
	DHK048AW	1	575	3	3	3.2	—
5	DSK060A3	1	208/230	1	1	6.9	—
	DSK060A4	1	460	1	1	2.4	—
	DSK060AW	1	575	1	1	2.9	—
	DHK060A3	1	208/230	3	3	8.8	—
	DHK060A4	1	460	3	3	4.6	—
	DHK060AW	1	575	3	3	3.2	—
6	DS/HK072A3	1	208/230	3	3	8.8	—
	DS/HK072A4	1	460	3	3	4.6	—
	DS/HK072AW	1	575	3	3	3.2	—
7.5	DS/HK090A3	1	208/230	3	3	8.8	—
	DS/HK090A4	1	460	3	3	4.6	—
	DS/HK090AW	1	575	3	3	3.2	—
8.5	DS/HK102A3	1	208/230	3	3	8.8	—
	DS/HK102A4	1	460	3	3	4.6	—
	DS/HK102AW	1	575	3	3	3.2	—
10	DS/HK120A3	1	208/230	3	5	11	—
	DS/HK120A4	1	460	3	5	5.5	—
	DS/HK120AW	1	575	3	5	3.9	—
12.5	DS/HK150A3	2	208/230	3	3	8.8	—
	DS/HK150A4	2	460	3	3	4.6	—
	DS/HK150AW	2	575	3	3	3.2	—
15	DS/HK180A3	2	208/230	3	3	8.8	—
	DS/HK180A4	2	460	3	3	4.6	—
	DS/HK180AW	2	575	3	3	3.2	—
17.5	DS/HK210A3	2	208/230	3	3	8.8	—
	DS/HK210A4	2	460	3	3	4.6	—
	DS/HK210AW	2	575	3	3	3.2	—
20	DS/HK240A3	2	208/230	3	3	8.8	—
	DS/HK240A4	2	460	3	3	4.6	—
	DS/HK240AW	2	575	3	3	3.2	—

Table 177. Electrical characteristics — indoor fan motor — dual fuel (continued)

Tons	Unit Model Number	No.	Volts	Phase	hp	Amps[a]	
						FLA	LRA
25	DS/HK300A3	2	208/230	3	3	8.8	—
	DS/HK300A4	2	460	3	3	4.6	—
	DS/HK300AW	2	575	3	3	3.2	—

[a] Amp draw for each motor (compressor and condenser fan motor); multiply value by number of motors to determine total amps.

Table 178. Electrical characteristics — oversized indoor fan motor — dual fuel

Tons	Unit Model Number	No.	Volts	Phase	hp	Amps[a]	
						FLA	LRA
3	DSK036A3	1	208/230	1	1.5	8.2	—
	DSK036A4	1	460	1	1.5	4.2	—
	DSK036AW	1	575	1	1.5	3.9	—
4	DSK048A3	1	208/230	1	1.5	8.2	—
	DSK048A4	1	460	1	1.5	4.2	—
	DSK048AW	1	575	1	1.5	3.9	—
5	DSK060A3	1	208/230	1	1.5	8.2	—
	DSK060A4	1	460	1	1.5	4.2	—
	DSK060AW	1	575	1	1.5	3.9	—
17.5	DS/HK210A3	2	208/230	3	5	11	—
	DS/HK210A4	2	460	3	5	5.5	—
	DS/HK210AW	2	575	3	5	3.9	—
20	DS/HK240A3	2	208/230	3	5	11	—
	DS/HK240A4	2	460	3	5	5.5	—
	DS/HK240AW	2	575	3	5	3.9	—
25	DS/HK300A3	2	208/230	3	5	11	—
	DS/HK300A4	2	460	3	5	5.5	—
	DS/HK300AW	2	575	3	5	3.9	—

[a] Amp draw for each motor (compressor and condenser fan motor); multiply value by number of motors to determine total amps.

Table 179. Electrical characteristics — inducer motor — dual fuel

Tons	Unit Model Number	Stages	hp	rpm	Volts	Phase	FLA	LRA
2-Stage Gas Heat								
3	D*K036A**(0,A)(L,M,H)	2	1/35	3500/2800	208-230	1	0.24/0.18	0.67
4	D*K048A**(0,A)(L,M,H)	2	1/35	3500/2800	208-230	1	0.24/0.18	0.67
5	D*K060A**(0,A)(L,M,H)	2	1/35	3500/2800	208-230	1	0.24/0.18	0.67
6	D*K072A**(0,A)(L,M)	2	1/35	3500/2800	208-230	1	0.24/0.18	0.67
	D*K072A**(0,A)H	2	1/15	3350/2800	208-230	1	0.42/0.50	0.73
7.5	D*K090A**(0,A)L	2	1/35	3500/2800	208-230	1	0.24/0.18	0.67
	D*K090A**(0,A)(M,H)	2	1/15	3350/2800	208-230	1	0.42/0.50	0.73
8.5	D*K102A**(0,A)L	2	1/35	3500/2800	208-230	1	0.24/0.18	0.67
	D*K102A**(0,A)(M,H)	2	1/15	3350/2800	208-230	1	0.42/0.50	0.73
10	D*K120A**(0,A)M	2	1/35	3500/2800	208-230	1	0.24/0.18	0.67
	D*K120A**(0,A)(L,H)	2	1/15	3350/2800	208-230	1	0.42/0.50	0.73
12.5	D*K150A**(0,A)(L,M,H)	2	1/15	3300/2800	208-230	1	0.36/0.3	0.73

Table 179. Electrical characteristics — inducer motor — dual fuel (continued)

Tons	Unit Model Number	Stages	hp	rpm	Volts	Phase	FLA	LRA
15	D*K180A**(0,A)(L,M)	2	1/15	3300/2800	208-230	1	0.36/0.3	0.73
	D*K180A**(0,A)H	2	1/6	3300/2300	208-230	1	0.95/0.49	1.53
17.5	D*K210A**(0,A)(L,M)	2	1/15	3300/2800	208-230	1	0.36/0.3	0.73
	D*K210A**(0,A)H	2	1/6	3300/2300	208-230	1	0.95/0.49	1.53
20	D*K240A**(0,A)(L,M)	2	1/15	3300/2800	208-230	1	0.36/0.3	0.73
	D*K240A**(0,A)H	2	1/6	3300/2300	208-230	1	0.95/0.49	1.53
25	D*K300A**(0,A)(L,M)	2	1/15	3300/2800	208-230	1	0.36/0.3	0.73
	D*K300A**(0,A)H	2	1/6	3300/2300	208-230	1	0.95/0.49	1.53
Modulating 10:1 Gas Heat								
6 - 10	D*K(072,090,102,120)A**B	Variable	1/8	3400	120	1	1.3	3.3
12.5 - 25	D*K(150,180,210,240,300)A**B	Variable	1/5	3300	115	1	3.4	7.3

Table 180. Electrical characteristics —inducer motor (Ultra-Low NOx gas furnace option)

Tons	Unit Model Number	Stages	hp	rpm	Volts	Phase	LRA
3	DHK036A**CL	1	1/35	3000	208-230	1	0.6
4	DHK048A**CL	1	1/35	3000	208-230	1	0.6
5	DHK060A**CL	1	1/35	3000	208-230	1	0.6

Table 181. Electrical characteristics —pre-mix blower motor (Ultra-Low NOx gas furnace option)

Tons	Unit Model Number	Stages	hp	rpm	Volts	Phase	LRA
3	DHK036A**CL	1	1/12	7500	115	1	n/a
4	DHK048A**CL	1	1/12	7500	115	1	n/a
5	DHK060A**CL	1	1/12	7500	115	1	n/a

Dimensional Data

Note: *See Table 1, p. 6 for cabinet sizes.*

Figure 22. A.0 cabinet

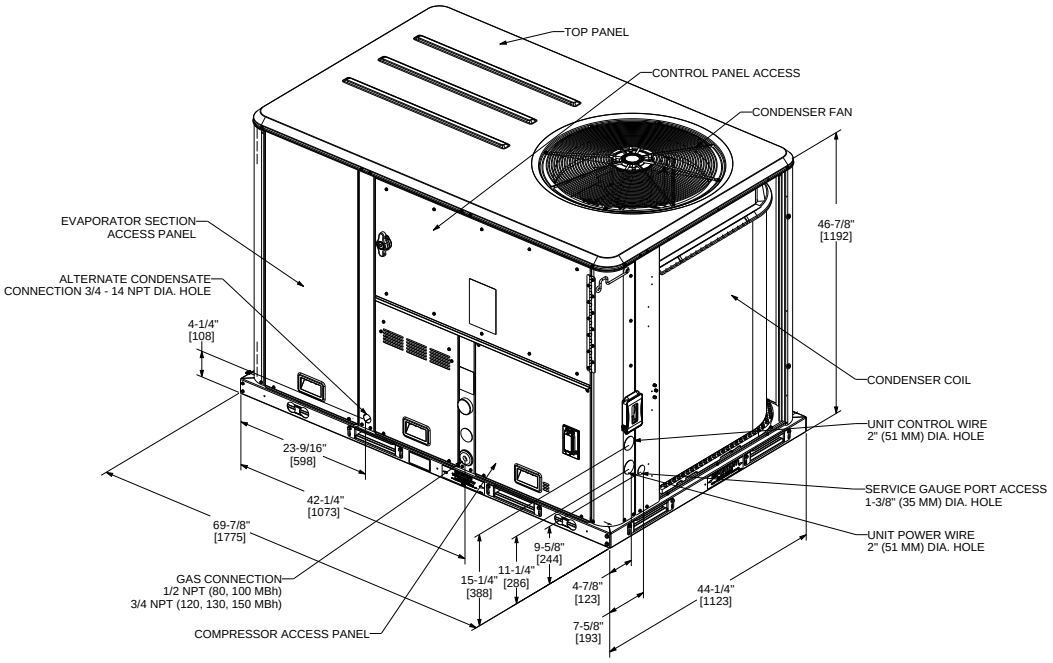

Figure 23. A.0 cabinet – downflow airflow supply/return, through-the-base utilities

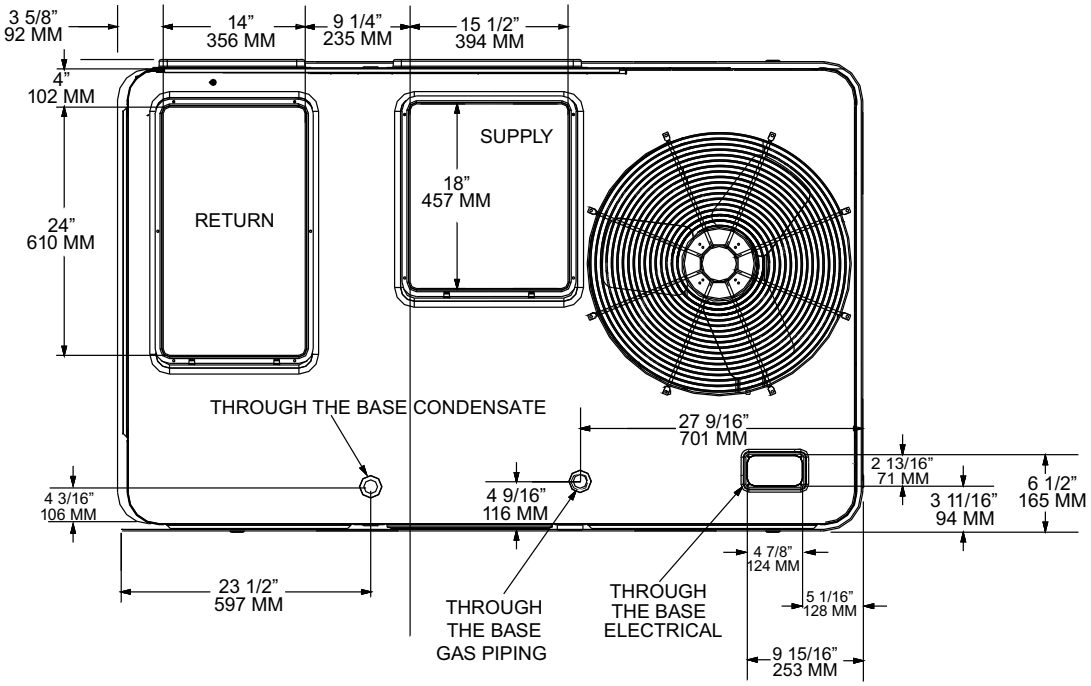

Figure 24. A.0 cabinet – horizontal airflow supply/return

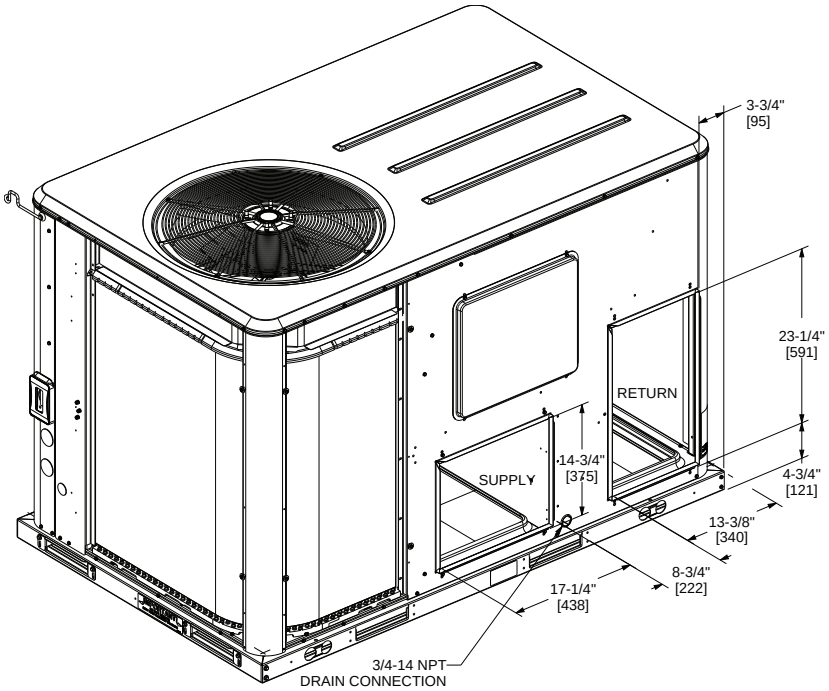

Figure 25. A.0 cabinet – unit clearance and roof opening

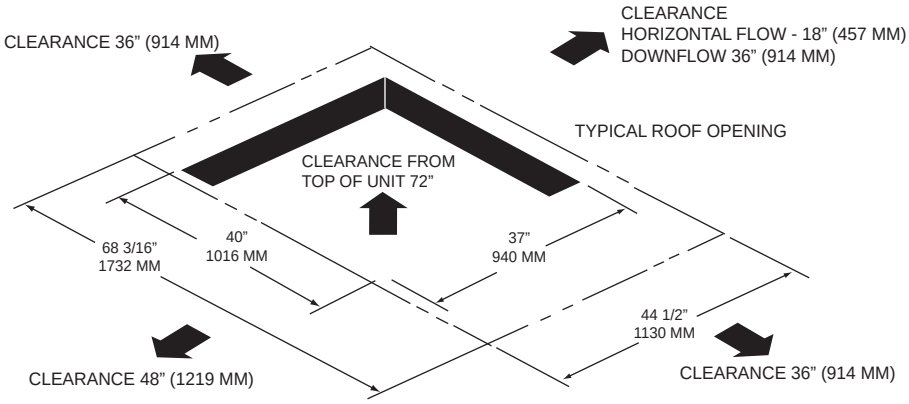

Figure 26. A.0 cabinet – roof curb

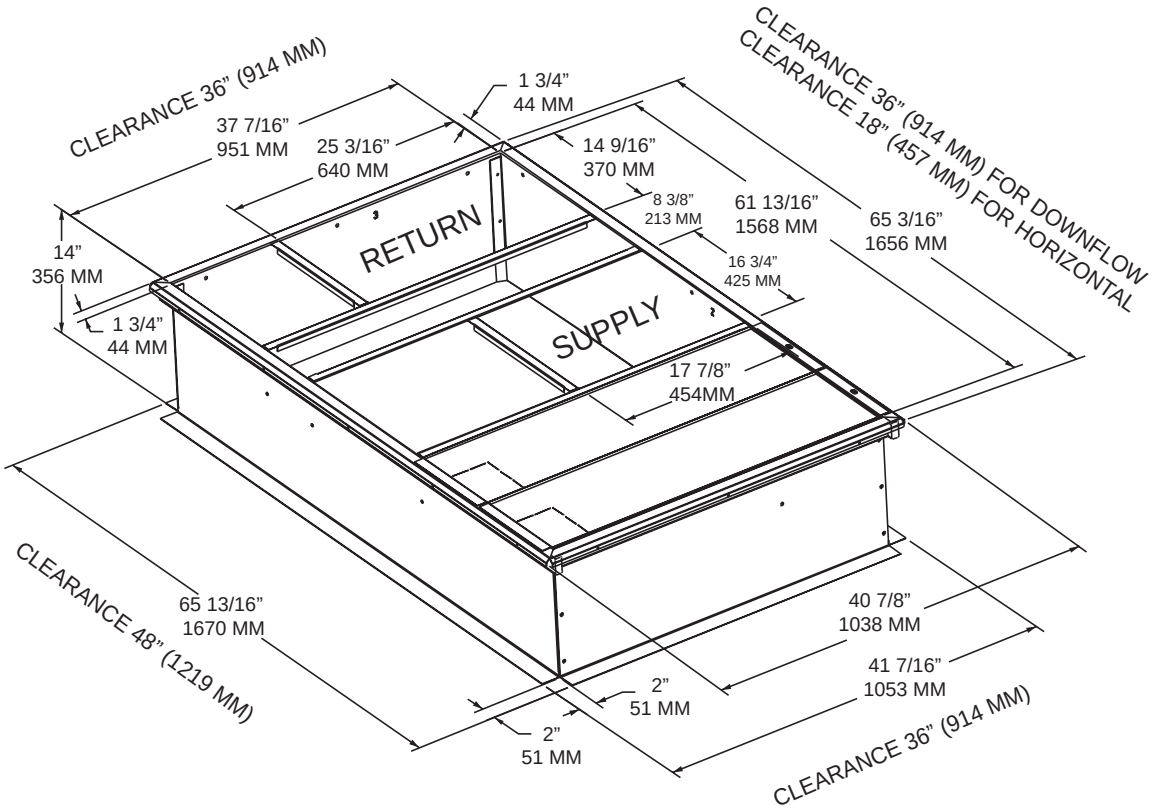

Figure 27. A.0 cabinet – downflow duct connections, field fabricated

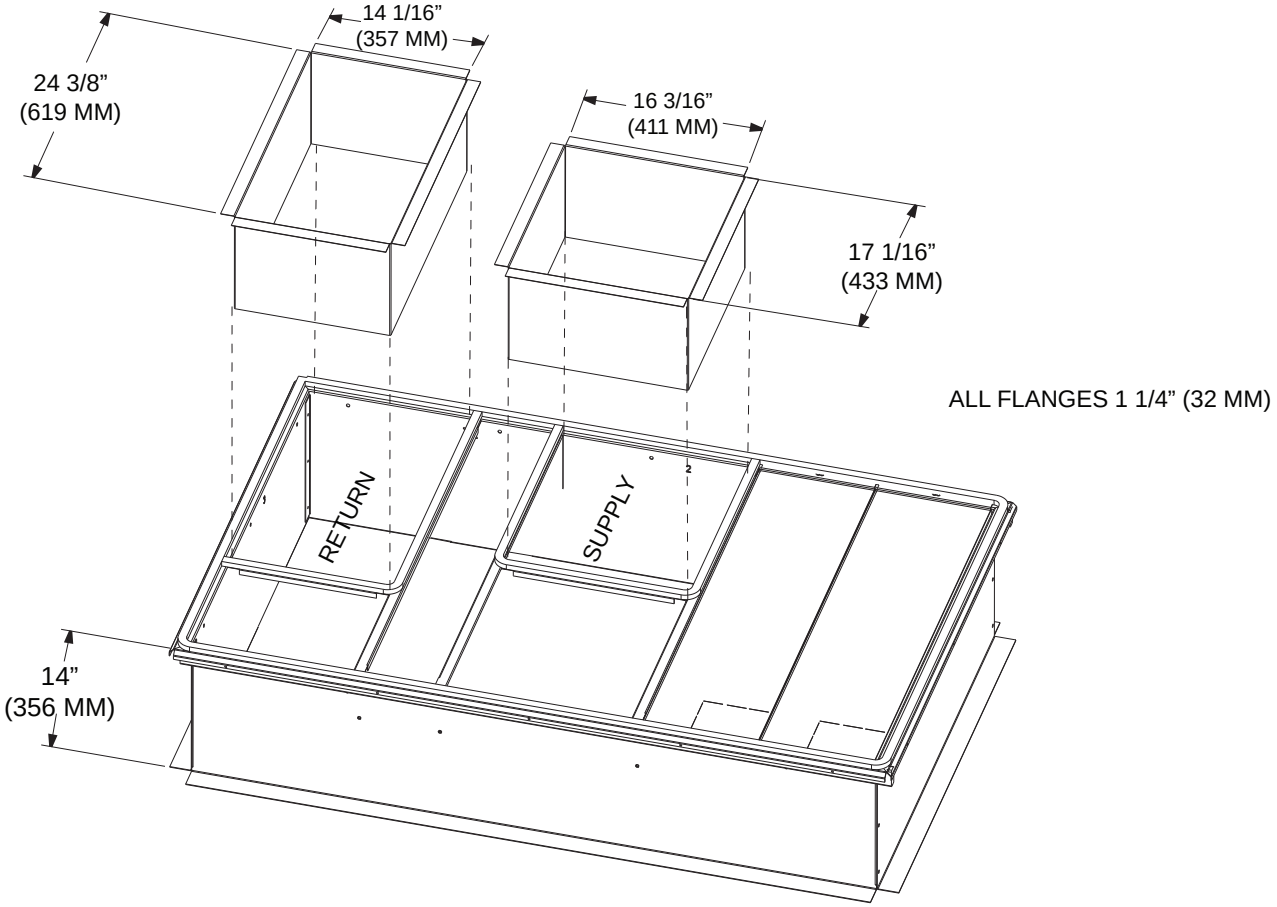

Figure 28. A.0 cabinet – swing diameter for hinged door(s) option

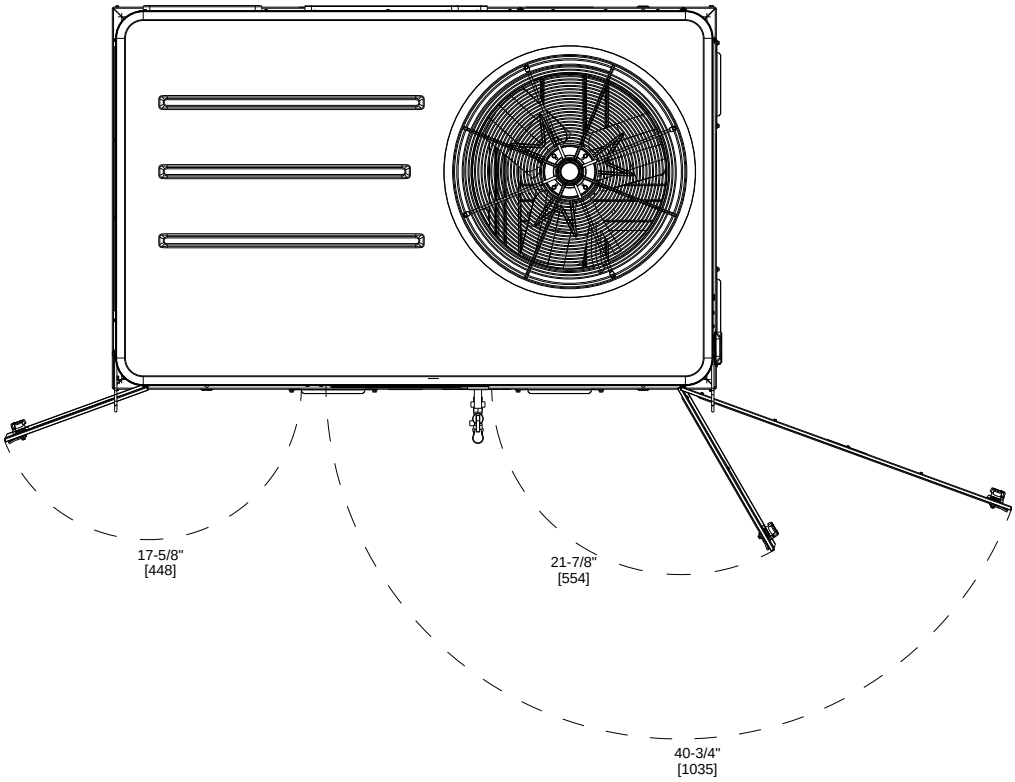

Figure 29. B.0 cabinet

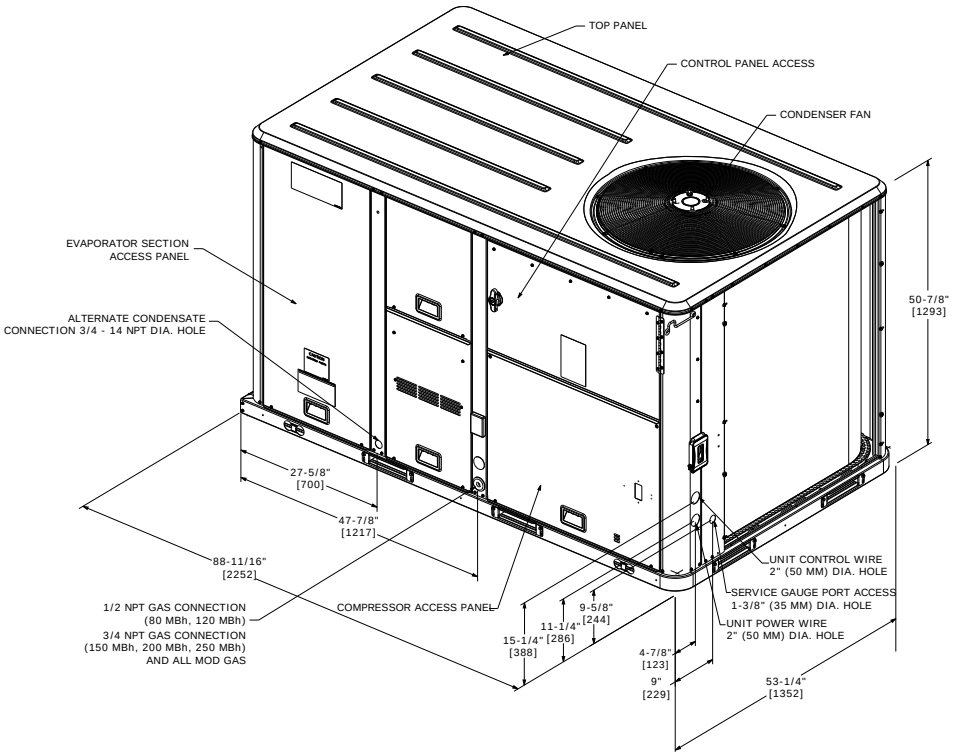

Figure 30. B.0 cabinet – downflow airflow supply/return, through-the-base utilities

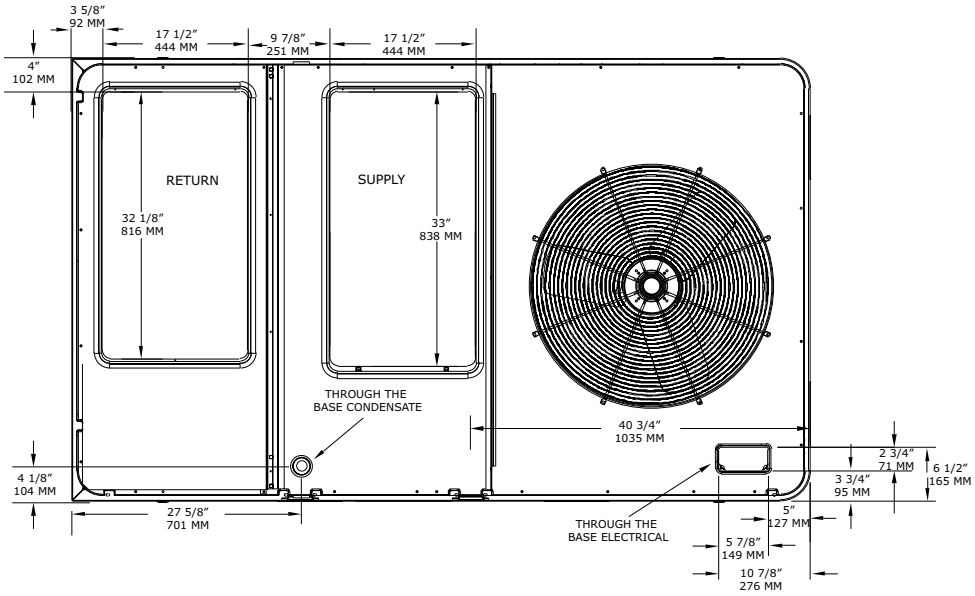

Figure 31. B.0 cabinet – horizontal airflow supply/return

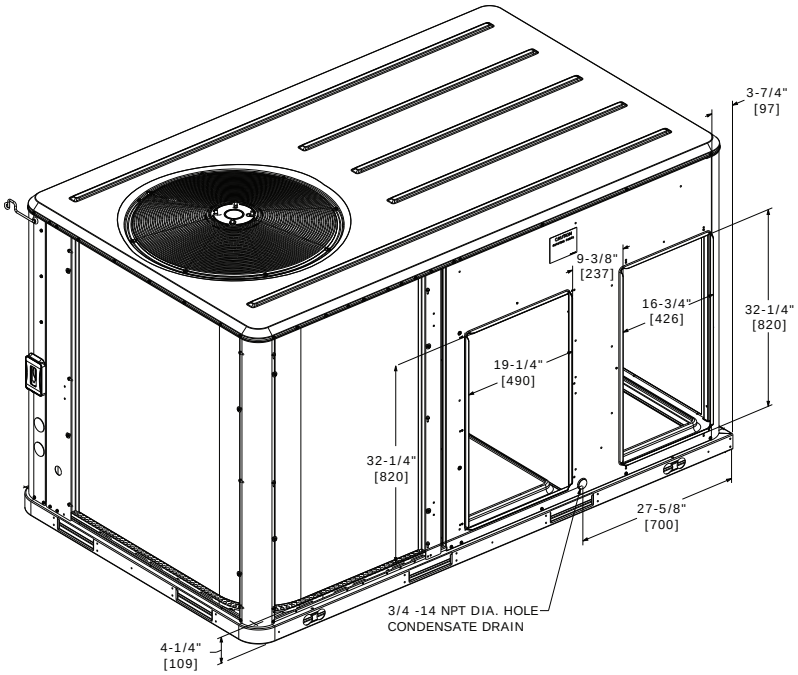

Figure 32. B.0 cabinet – unit clearance and roof opening

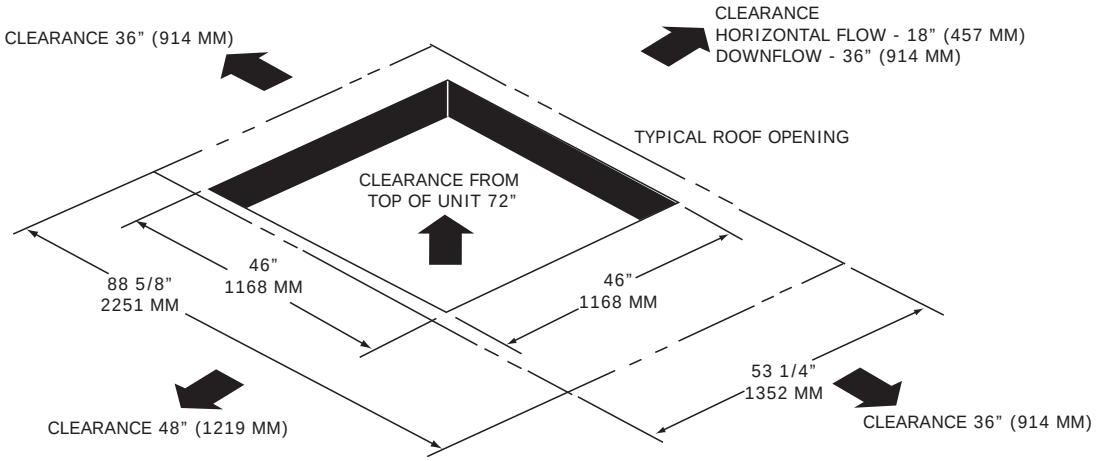

Figure 33. B.0 cabinet – roof curb

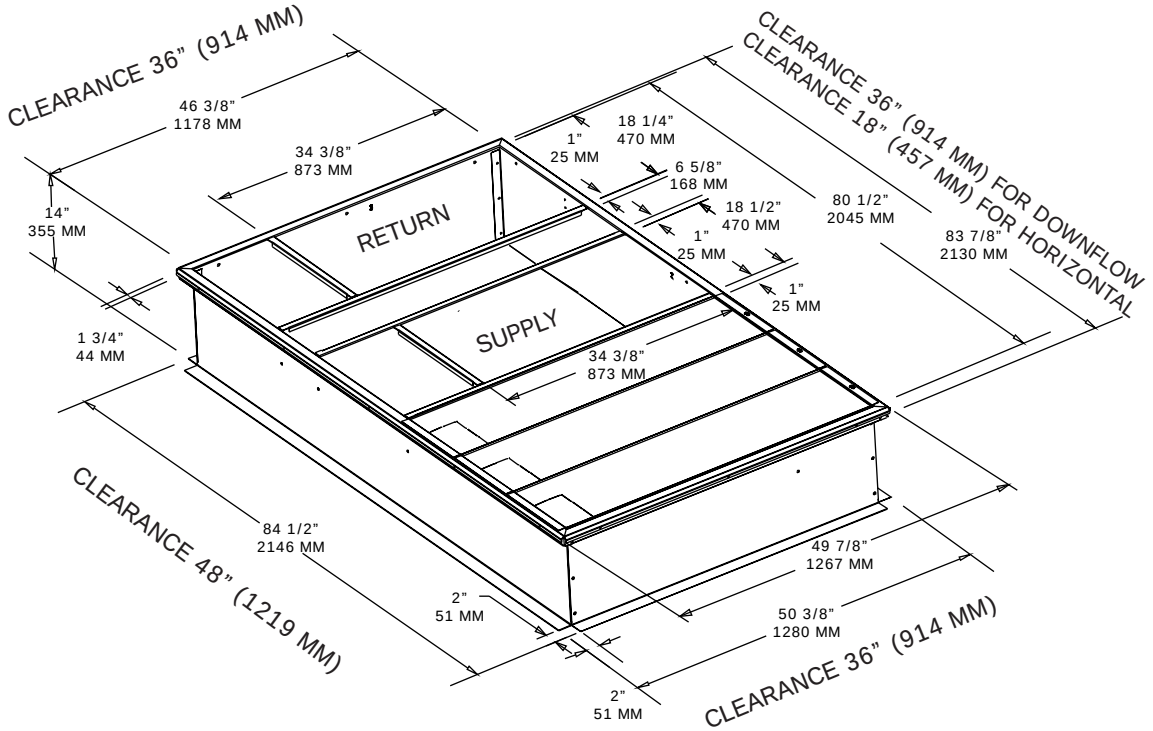

Figure 34. B.0 cabinet – downflow duct connections, field fabricated

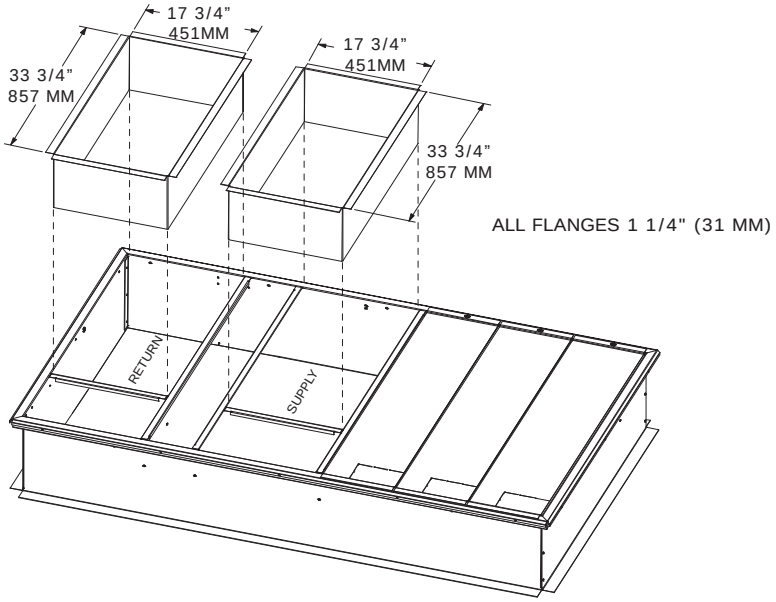

Figure 35. B.0 cabinet – swing diameter for hinged door(s) option

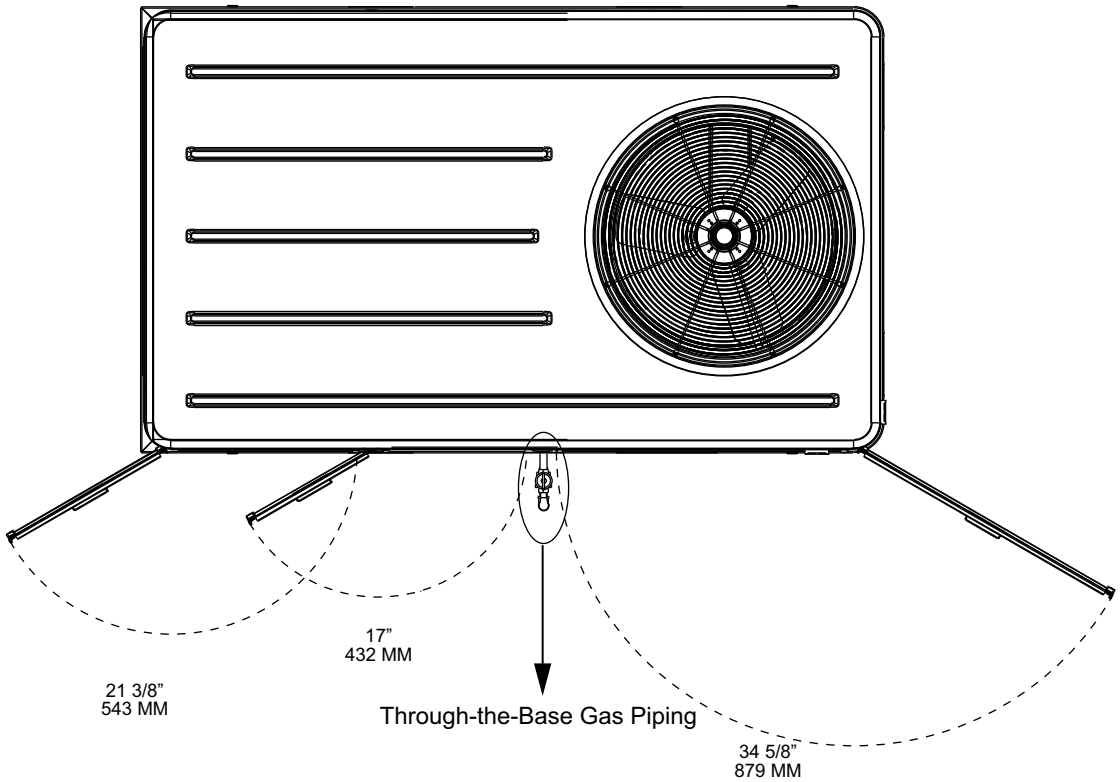

Figure 36. C.0 cabinet

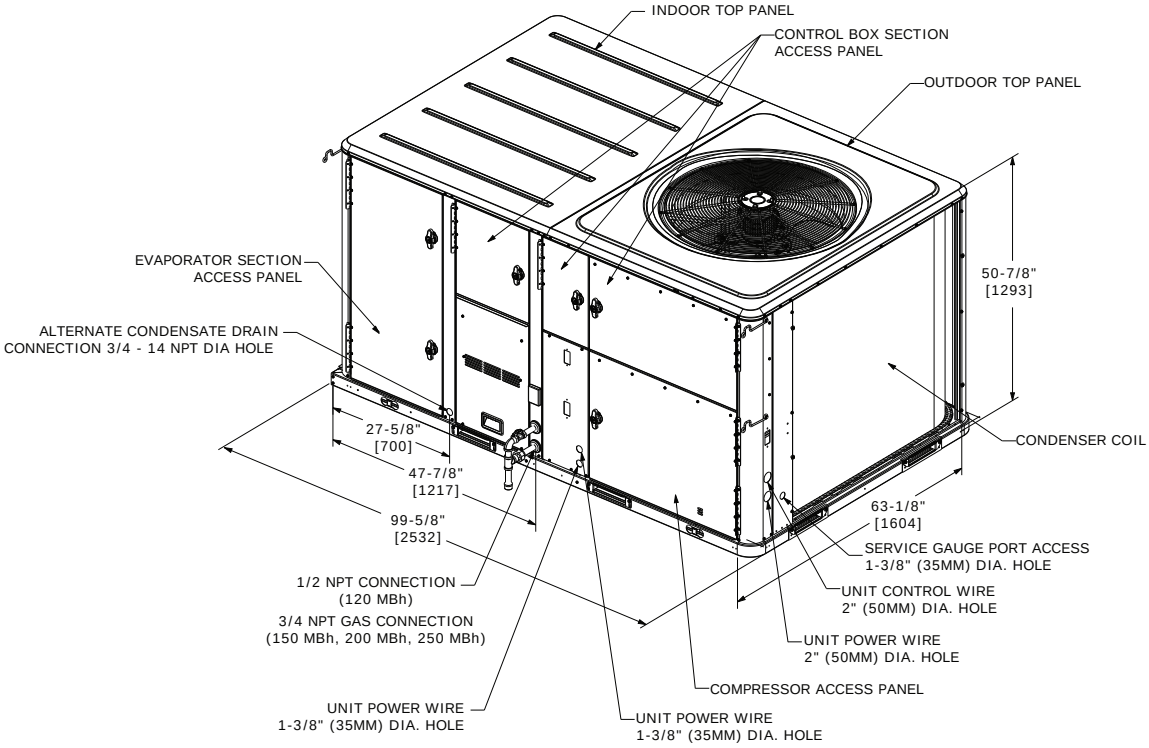

Figure 37. C.0 cabinet – downflow airflow supply/return, through-the-base utilities

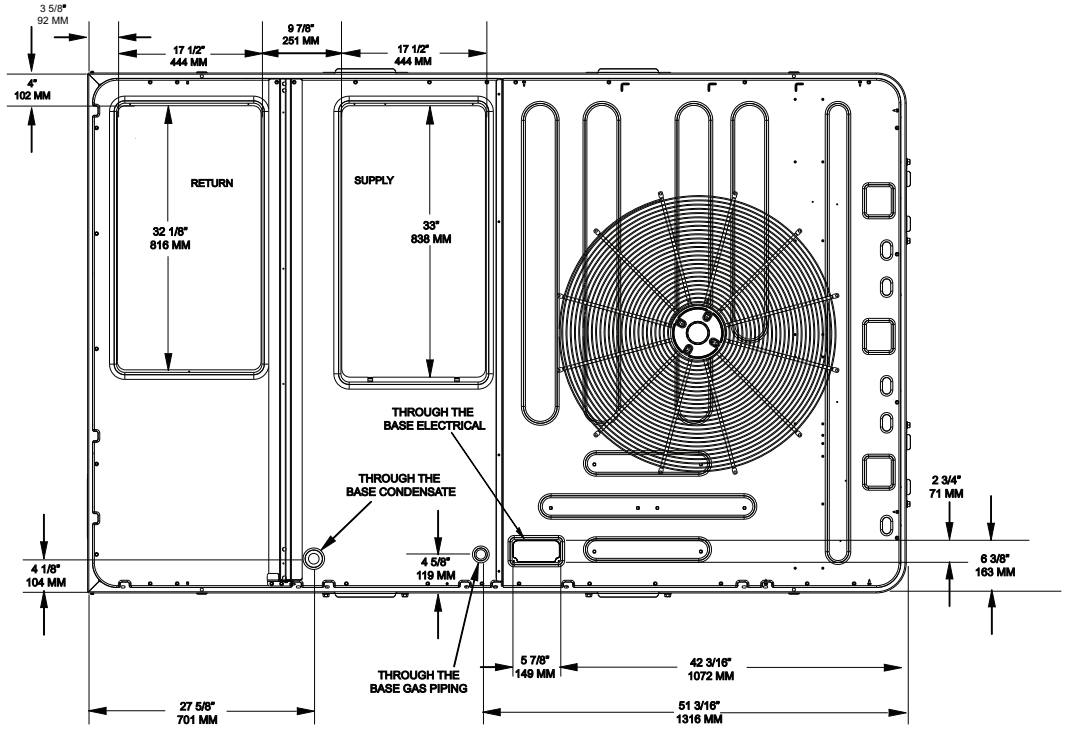

Figure 38. C.0 cabinet – horizontal airflow, supply and return

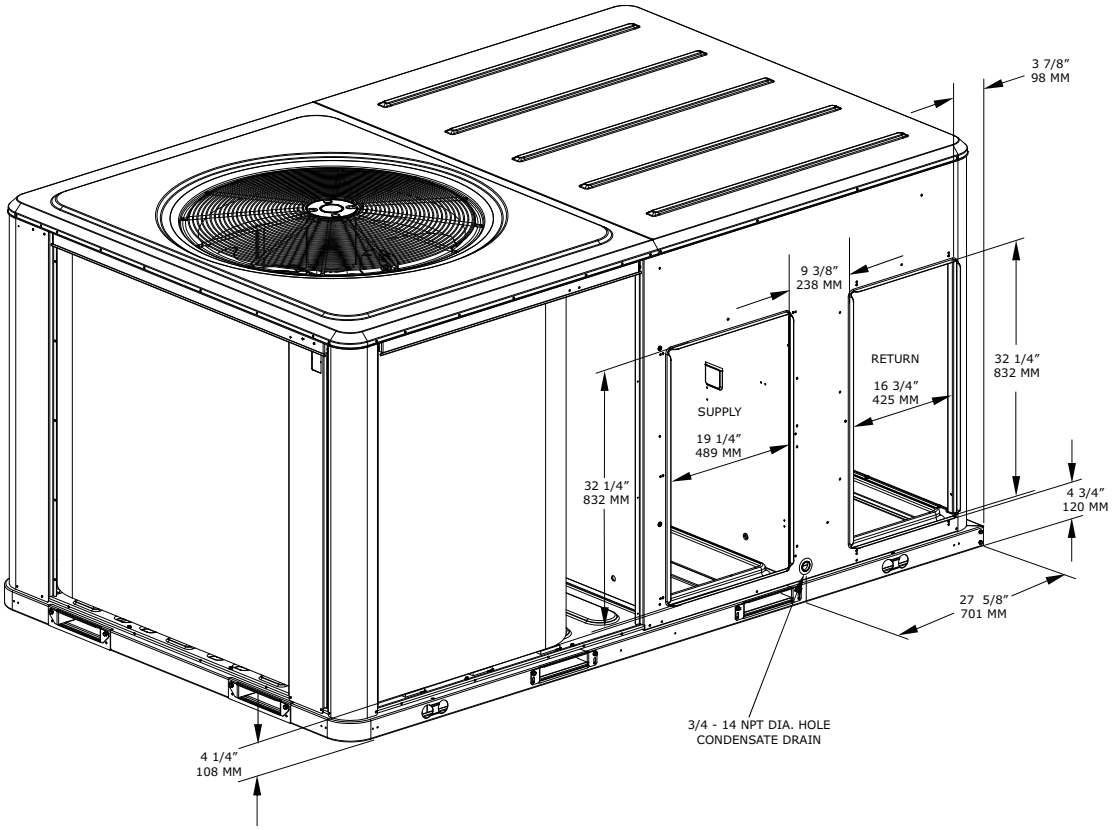

Figure 39. C.0 cabinet – unit clearance and roof opening

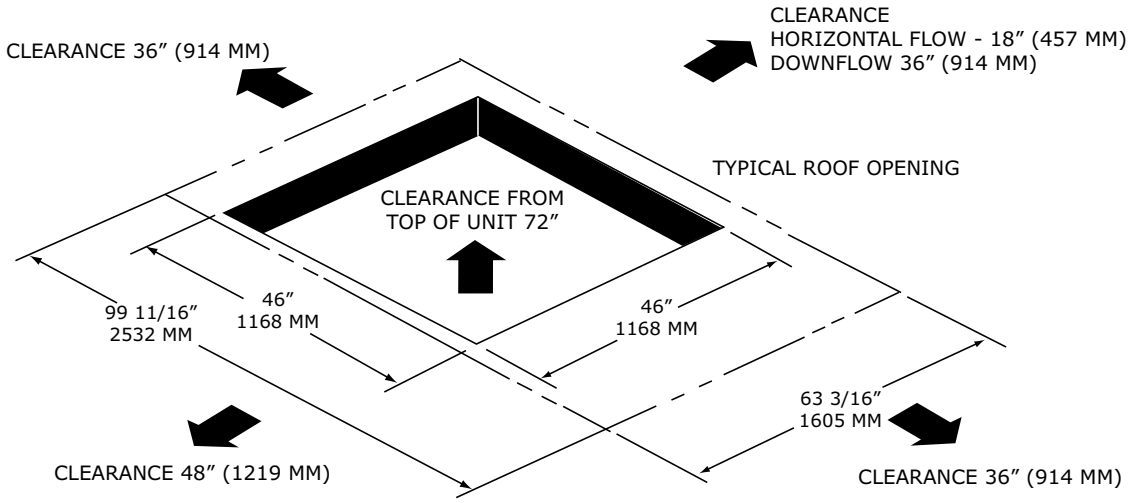

Figure 40. C.0 cabinet – roof curb

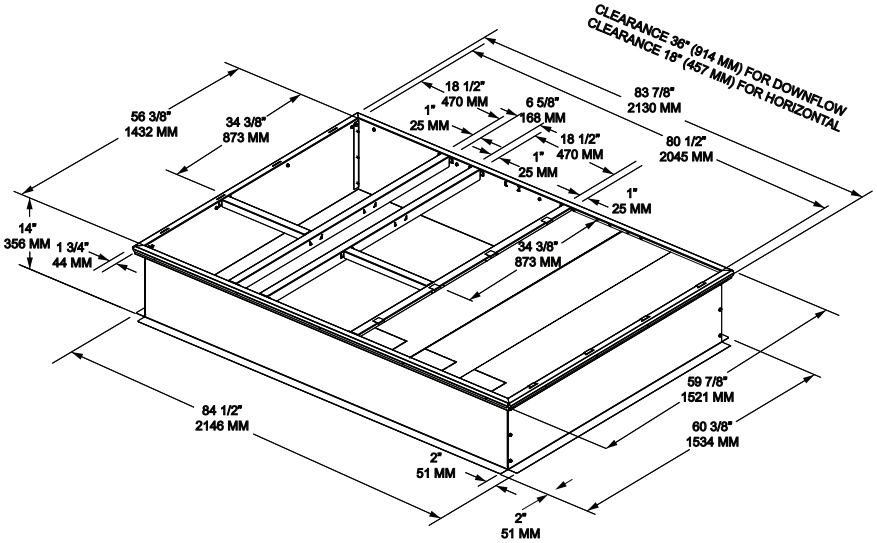

Figure 41. C.0 cabinet – swing diameter for hinged door(s) option

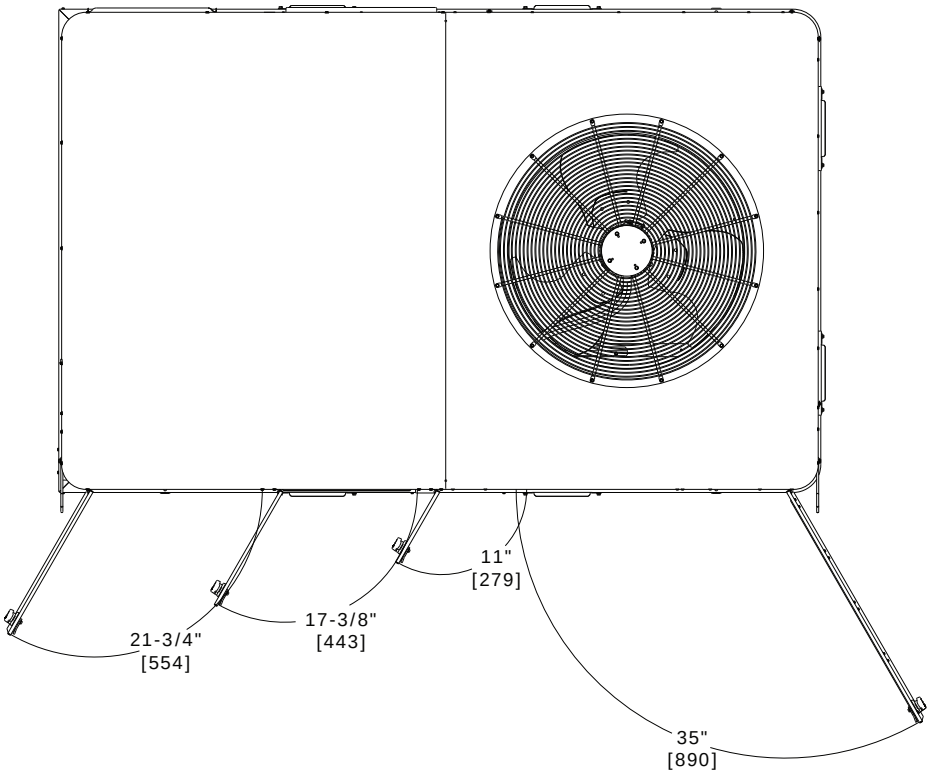

Figure 42. A.0, B.0 and C.0 cabinets – standard economizer, manual or motorized fresh air damper

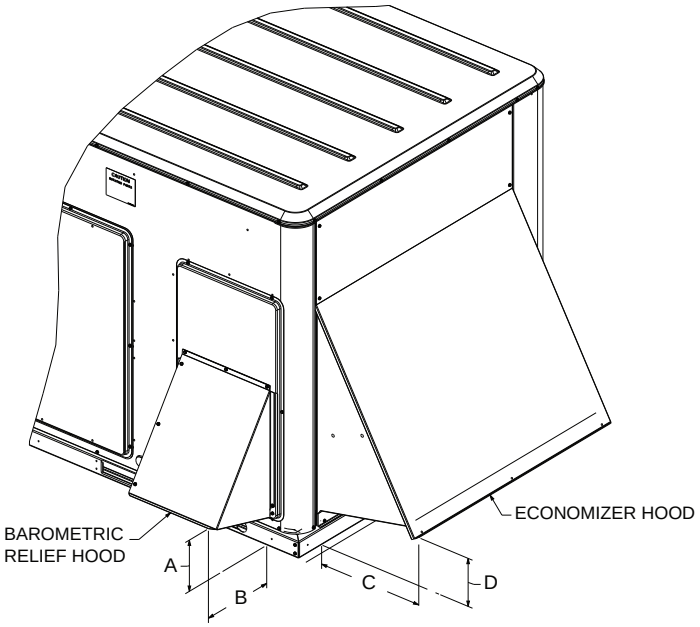

Table 182. A.0, B.0, and C.0 cabinet – standard economizer, manual or motorized fresh air damper dimensions

Cabinet	A		B		C		D	
	inch	mm	inch	mm	inch	mm	inch	mm
A.0	6 7/8	175	9 1/8	232	12 1/2	318	6 1/4	159
B.0 and C.0	7 3/4	197	12	305	16 3/4	425	7 1/4	184

Figure 43. A.0, B.0 and C.0 cabinets – power exhaust with standard economizer

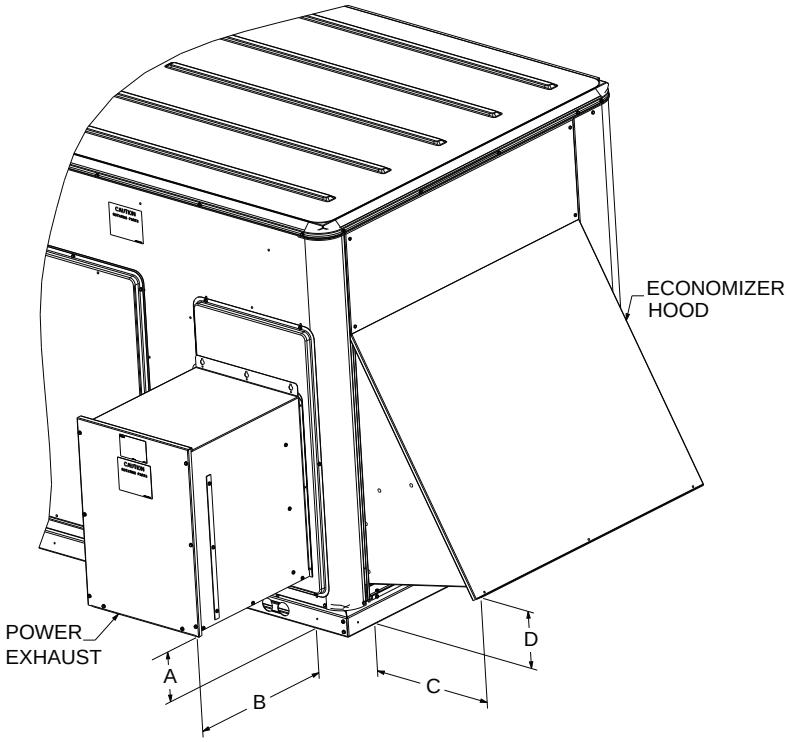

Table 183. A.0, B.0, and C.0 cabinet – power exhaust with standard economizer dimensions

Cabinet	A		B		C		D	
	inch	mm	inch	mm	inch	mm	inch	mm
A.0	6 1/4	159	16 3/4	425	12 1/2	318	6 1/4	159
B.0 and C.0	6 3/8	162	20 1/2	521	16 3/4	425	7 1/4	184

Figure 44. A.0, B.0 and C.0 cabinets – power exhaust with low leak economizer

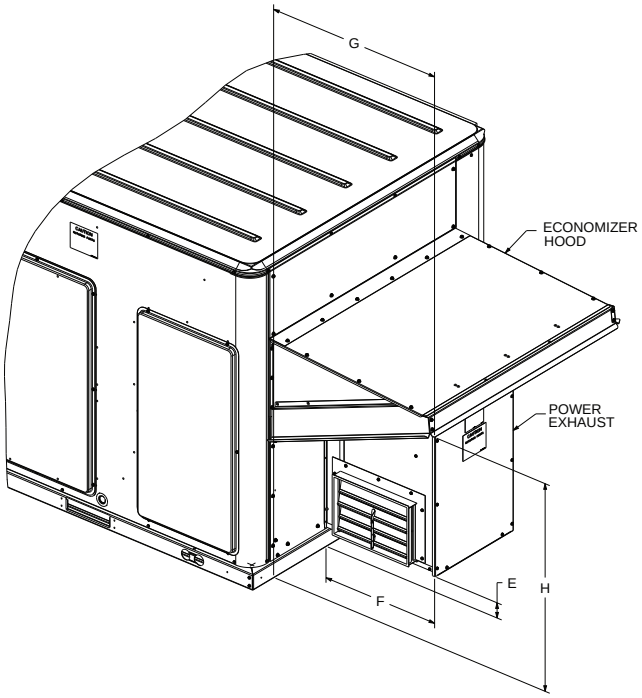

Table 184. A.0, B.0, and C.0 cabinets – power exhaust with low leak economizer dimensions

Cabinet	E		F		G		H	
	inch	mm	inch	mm	inch	mm	inch	mm
A.0	2 1/2	64	16	406	19 3/4	502	27	686
B.0 and C.0	2 1/2	64	19 3/4	502	29 1/4	743	33 1/2	852

Figure 45. D.0 and D.1 cabinets

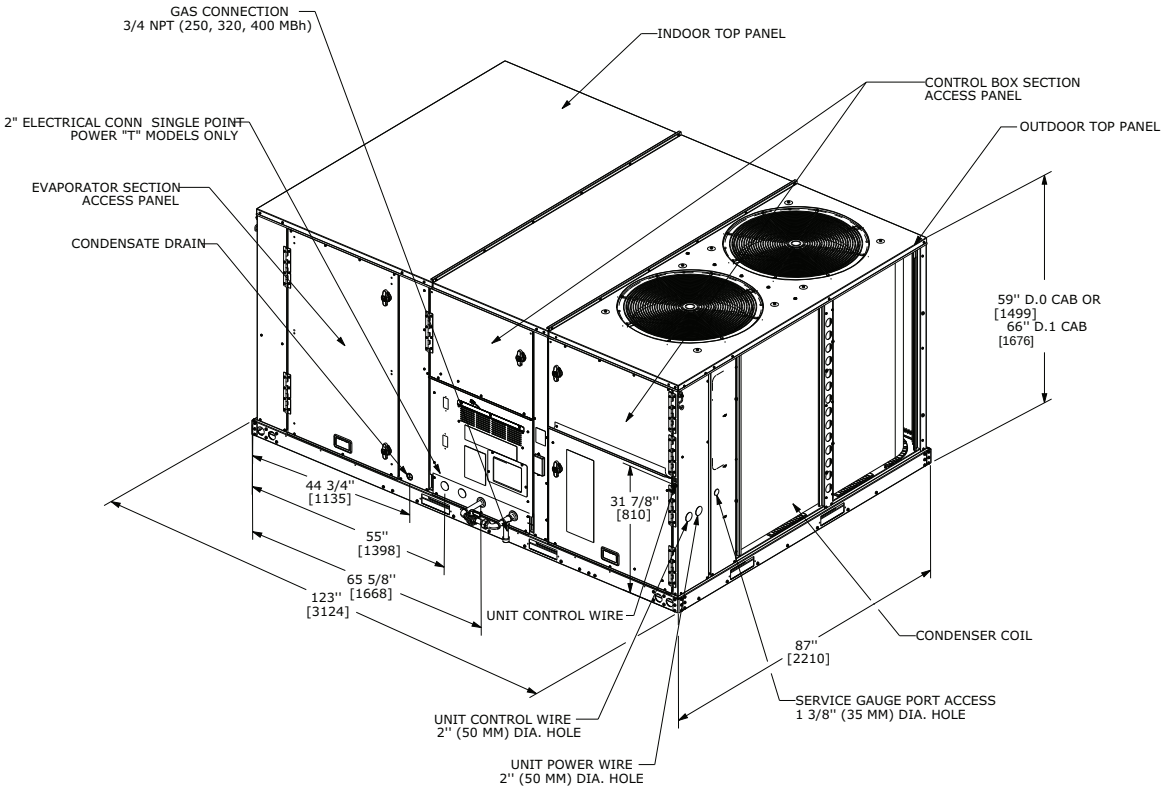

Figure 46. D.0 and D.1 cabinets – downflow airflow supply/return, through-the-base utilities

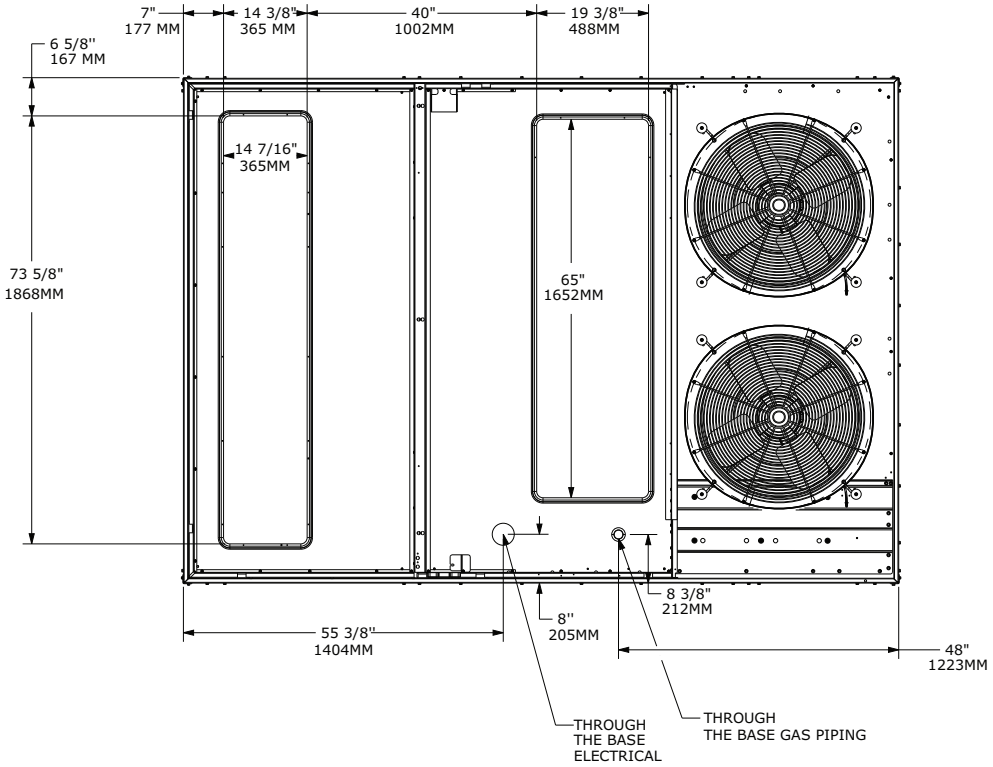

Figure 47. D.0 and D.1 cabinets – horizontal airflow supply/return

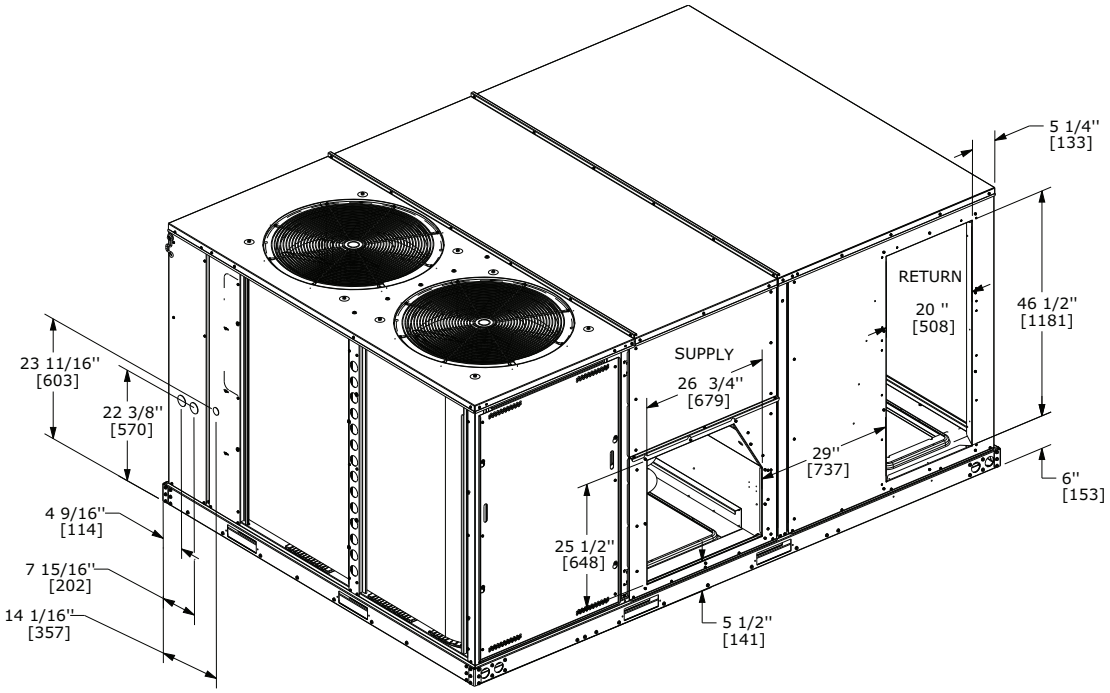

Figure 48. D.0 and D.1 cabinets – unit clearance and roof opening

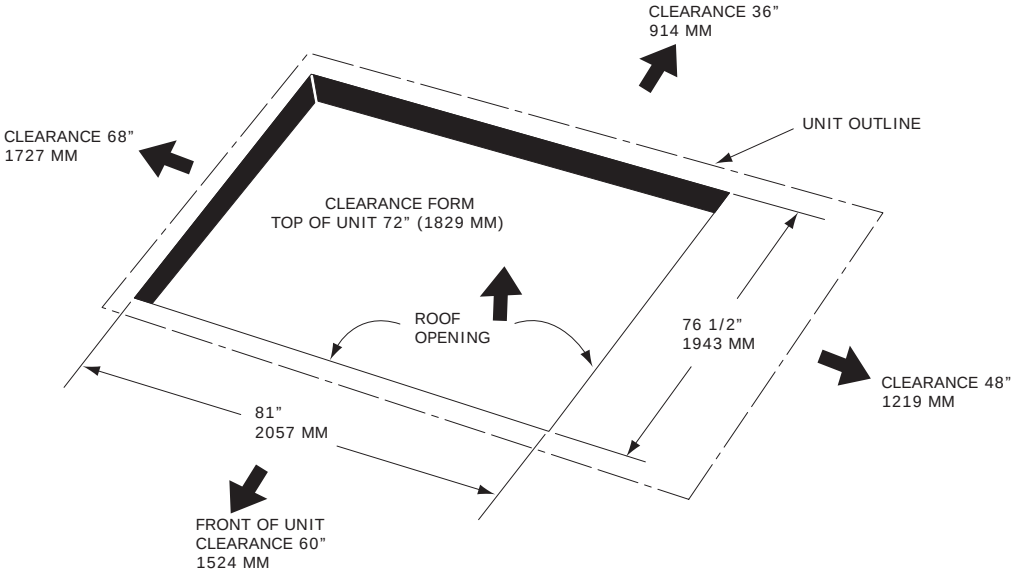

Figure 49. D.0 and D.1 cabinets – roof curb

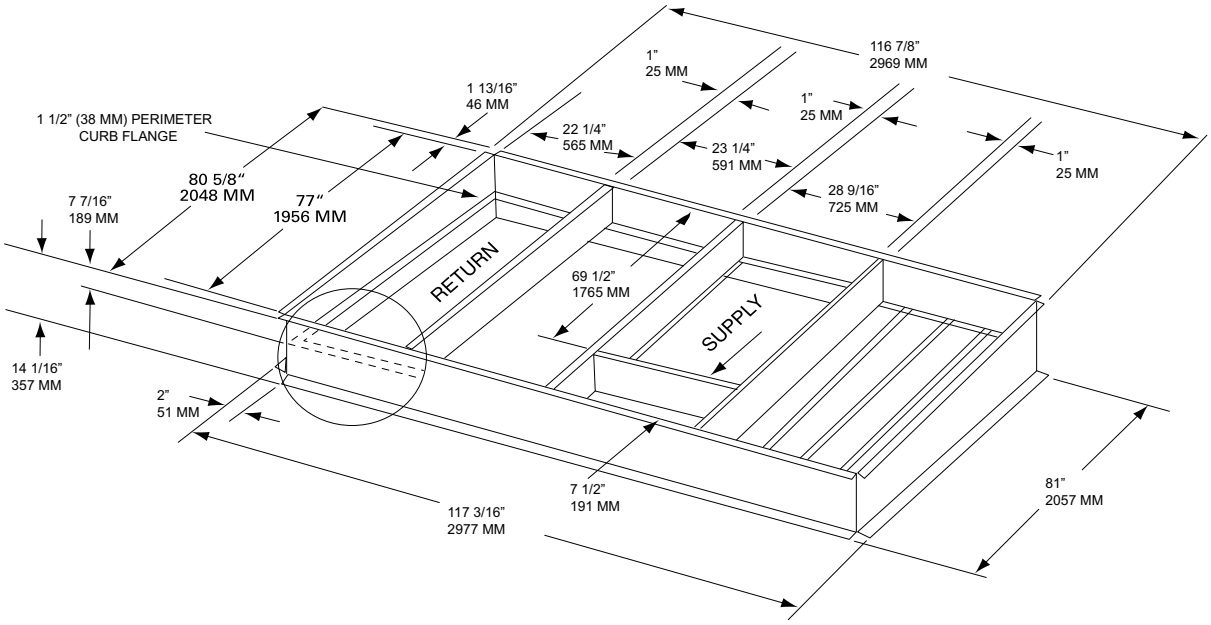

Figure 50. D.0 and D.1 cabinets – swing diameter for hinged door(s) option

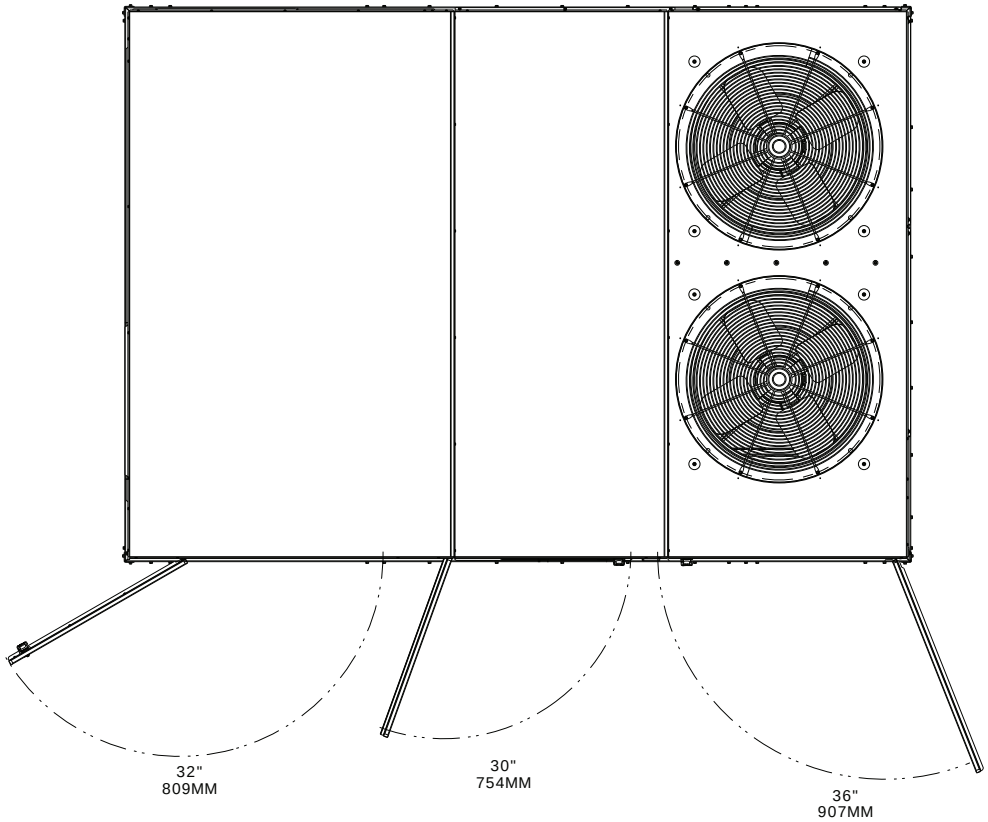

Figure 51. D.0 and D.1 cabinets – power exhaust

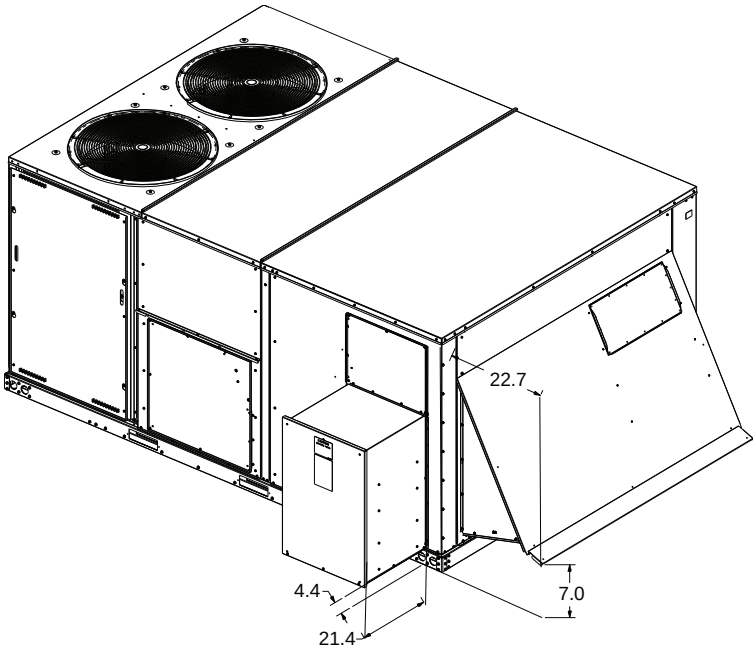

Figure 52. Gas pipe height

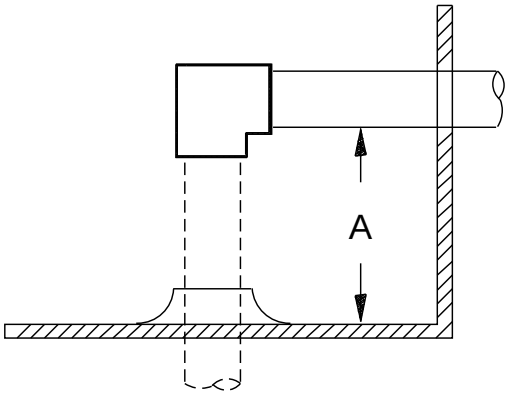

Note: *Height of gas pipe required from inside unit base to gas shut off assembly (factory provided).*

Table 185. Gas pipe height dimensions

Cabinet	Dimension A	
	inch	mm
A.0, B.0, and C.0	4-5/8	117
D.0 and D.1	1-3/6	30

Weights

Table 186. Model weights, corner weights (lbs), and center of gravity dimensions (in.) — heat pump

Tons	Unit Model No.	Model Weights[a]		Corner Weights[b]				Center of Gravity (in.)	
		Shipping	Net	A	B	C	D	Length	Width
Standard Efficiency									
3	WSK036	740	663	206	157	126	175	30	20
4	WSK048	760	683	216	162	125	179	29	20
5	WSK060	783	706	223	167	130	186	29	20
6	WSK072	1016	918	248	230	210	230	42	20
7.5	WSK090	1026	928	255	231	211	231	42	25
8.5	WSK102	1043	945	263	236	211	235	42	25
10	WSK120B	1059	961	271	237	212	242	42	25
12.5	WSK150	2225	2005	688	487	344	486	51	36
15	WSK180	2246	2026	695	492	348	491	51	36
17.5	WSK210	2253	2033	698	494	349	492	51	36
20	WSK240	2403	2183	680	550	426	527	55	38
25	WSK300	2405	2185	680	550	427	528	55	38
High Efficiency									
3	WHK036	908	810	239	204	169	198	41	24
4	WHK048	936	838	247	211	175	205	41	24
5	WHK060	943	845	241	205	184	215	41	25
6	WHK072	1020	922	249	231	211	231	42	25
7.5	WHK090	1029	931	256	232	212	231	42	25
8.5	WHK102	1047	949	265	237	211	236	42	25
10	WHK120	1438	1244	365	381	249	249	48	30
12.5	WHK150	2225	2005	688	487	344	486	51	36
15	WHK180	2246	2026	695	492	348	491	51	36
17.5	WHK210	2253	2033	698	494	349	492	51	36
20	WHK240	2403	2183	680	550	426	527	55	38
25	WHK300	2405	2185	680	550	427	528	55	38

(a) Weights are approximate. Weights do not include additional factory or field installed options/accessories. For option/accessory additional weights to be added to unit weight, reference the following table.

(b) Corner weights are given for information only.

Table 187. Model weights, corner weights (lbs), and center of gravity dimensions (in.) — dual fuel

Tons	Unit Model No.	Model Weights[a]		Corner Weights[b]				Center of Gravity (in.)	
		Shipping	Net	A	B	C	D	Length	Width
Standard Efficiency									
3	DSK036	802	725	223	174	140	188	30	20
4	DSK048	822	745	233	180	139	193	30	20
5	DSK060	844	768	240	185	143	199	30	20
6	DSK072	1083	985	275	246	219	245	42	25
7.5	DSK090	1123	1025	286	256	228	255	42	25
8.5	DSK102	1140	1042	291	260	231	260	42	25
10	DSK120	1530	1336	364	336	305	331	48	30
12.5	DSK150	2405	2185	750	531	375	529	51	36

Table 187. Model weights, corner weights (lbs), and center of gravity dimensions (in.) — dual fuel (continued)

15	DSK180	2426	2206	757	536	378	535	51	36
17.5	DSK210	2433	2213	759	538	380	536	51	36
20	DSK240	2583	2363	736	595	462	571	55	38
25	DSK300	2585	2365	736	596	462	571	55	38
High Efficiency									
3	DHK036	975	877	245	219	195	218	42	25
4	DHK048	1001	903	252	225	201	225	42	25
5	DHK060	1009	911	254	227	203	227	42	25
6	DHK072	1087	989	276	247	220	246	42	25
7.5	DHK090	1126	1028	287	256	229	256	42	25
8.5	DHK102	1144	1046	292	261	233	260	42	25
10	DHK120	1535	1341	365	337	307	332	48	30
12.5	DHK150	2405	2185	750	531	375	529	51	36
15	DHK180	2426	2206	757	536	378	535	51	36
17.5	DHK210	2433	2213	759	538	380	536	51	36
20	DHK240	2583	2363	736	595	462	571	55	38
25	DHK300	2585	2365	736	596	462	571	55	38

(a) Weights are approximate. Weights do not include additional factory or field installed options/accessories. For option/accessory additional weights to be added to unit weight, reference the following table.

(b) Corner weights are given for information only.

Figure 53. Corner weights

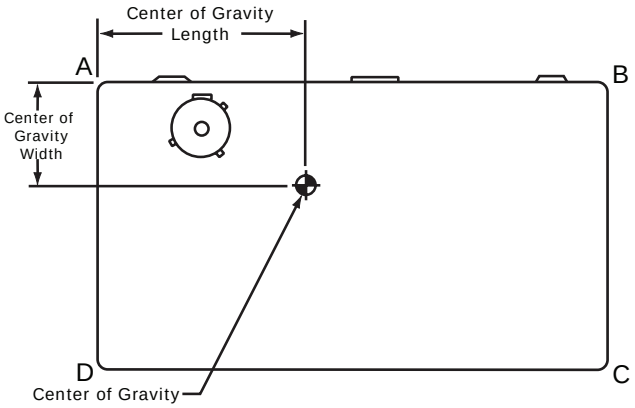

Table 188. Factory installed options (FIOPS)/accessory net weights (lb)

Accessory	Standard Efficiency						High Efficiency			
	W/DSK 036-060	W/DSK 072-102	WSK120 / DSK120	DSK 120	W/DSK 150-210	W/DSK 240-300	W/DHK 036-060	W/DHK 036-102	W/DHK 120	W/DHK 150-210
Barometric Relief	7	10	10	10	40	40	10	10	10	40
Economizer	26	36	36	36	91	91	36	36	36	91
Electric Heaters[a]	15	44	44 / 50	50	75	75	44	44	50	75
Hinged Doors	10	12	12	12	20	30	12	12	12	20

Table 188. Factory installed options (FIOPS)/accessory net weights (lb) (continued)

Accessory	Standard Efficiency						High Efficiency			
	W/DSK 036-060	W/DSK 072-102	WSK120 / DSK120	DSK 120	W/DSK 150-210	W/DSK 240-300	W/DHK 036-060	W/DHK 036-102	W/DHK 120	W/DHK 150-210
Low Leak Economizer - Downflow	79	91	91	91	150	150	91	91	91	150
Low Leak Economizer - Horizontal	130	186	186	186	180	180	186	186	186	180
Manual Outside Air Damper	16	26	26	26	15	15	26	26	26	15
Motorized Outside Air Damper	20	30	30	30	82	82	30	30	30	82
Oversized Motor[b]	5	14	14	14	30	30	14	14	14	30
Powered Convenience Outlet	38	38	38 / 50	50	50	50	38	38	50	50
Power Exhaust	40	80	80	80	110	110	80	80	80	110
Reheat Coil	21	16	16 / 20	20	100	100	16	16	20	100
Roof Curb	61	105	105 / 111	111	235	235	105	105	111	235
Smoke Detector, Supply[b]	-	5	5	5	5	5	5	5	5	5
Smoke Detector, Return	7	7	7	7	5	5	7	7	7	5
Stainless Steel Heat Exchanger [c]	4	6	6	6	5	5	6	6	6	5
Through-the-Base Electrical	8	13	13	13	10	10	13	13	13	10
Through-the-Base Gas[c]	5	5	5	5	10	10	5	5	5	10
Ultra-Low Nox Gas Furnace	-	-	-	-	-	-	22	-	-	-
Unit Mounted Circuit Breaker	5	10	10	10	10	10	10	10	10	10
Unit Mounted Disconnect	5.0	5.0	5.0	5.0	10.0	10.0	5.0	5.0	5.0	10.0

Notes:

1. Weights for options not listed are less than 5 pounds.
2. Net weight should be added to unit weight when ordering factory-installed accessories.
3. Weights are approximate.

[a] Only applies to W*K models.
[b] Not available on all models.
[c] Only applies to D*K models.

Mechanical Specifications

General

- Precedent unit cooling capacities, heating capacities, and efficiencies are certified to the following standards:
  - 3 to 5 ton units: AHRI Standard 210/240.
  - 6 to 25 ton units: AHRI Standard 340/360.
- Gas Heating Units: ANSI Z21.47 and 10 CFR Part 431 for Commercial Warm Air.
- Convertible airflow.
- Symbio™ controls operating range between 40°F and 125°F in cooling mode standard from the factory. Field-installed low ambient kit extends operating range down to 0°F.
- Factory assembled, internally wired, fully charged, and 100 percent run tested to verify cooling operation, fan and blower rotation, and control sequence.
- Colored and numbered wiring internal to the unit for simplified identification.
- cULus listed and classified in accordance for Central Cooling Air Conditioners.

Casing

- Zinc coated, heavy gauge, galvanized steel.
- Weather resistant pre-painted metal with galvanized substrate.
- Meets ASTM B117, 672 hour salt spray test.
- Removable single side maintenance access panels.
- Lifting handles in maintenance access panels (can be removed and reinstalled by removing fasteners while providing a water and air tight seal).
- Exposed vertical panels and top covers in the indoor air section insulated with a cleanable foil-faced, fire-retardant permanent, odorless glass fiber material.
- Base pan with no penetrations within the perimeter of the curb other than the raised 1-inch downflow supply/return openings to provide an added water integrity precaution, if the condensate drain backs up.
- Base of the unit insulated with 1/8-inch, foil-faced, closed-cell insulation.
- Unit base provisions for forklift and/or crane lifting on three sides of unit.

Coils

- Internally finned, 5/16-inch copper tubes mechanically bonded to a configured aluminum plate fin are standard.
- Coils are leak tested at the factory to ensure integrity.
- Evaporator coil and condenser coil are leak tested to 600 psig.
- Assembled unit is leak tested to 465 psig.
- Condenser coil is patent pending 1+1+1 hybrid coil, designed with slight gaps for cleaning ease.

Coil Guards

Provides condenser coil protection.

Compressors

- All units have direct-drive, hermetic, scroll type compressors with centrifugal type oil pumps.
- Suction gas-cooled motor with voltage utilization range of plus or minus 10 percent of unit nameplate voltage.
- Internal overloads standard with scroll compressors.
- Crankcase heaters are standard on all compressors.
- Dual compressors (6 to 25 ton units only).
- Cooling stages available:
  - 6 to 17.5 ton units – three.
  - 20 and 25 ton units – four.

Filters

- Standard 2-inch filters.
- Optional 2-inch MERV 8 and MERV 13 filters.

Frostat

- Used as a safety device.
- Opens to prevent freezing temperatures on evaporator coil.
- Closes when temperature rises to 50°F.
- Utilized in low airflow or high outside air applications (cooling only).

Gas Heating Section

- Compact cabinet features a tubular heat exchanger in low, medium and high heat capacities.
- Corrosion-resistant aluminized steel tubes and burners are standard on all models.
- Induced draft combustion blower is used to pull the combustion products through the firing tubes.
- Heater uses a direct spark ignition (DSI) system and a flame sensor as a safety device to validate the flame.
- Units are suitable for use with natural gas or propane (field-installed kit).
- Stainless steel heat exchanger with 409 stainless steel tubes and 439 stainless steel burners (optional).

Indoor Fan

- Direct drive forward curve fan design – A.0 cabinet.
- Direct drive plenum fan design – B.0, C.0, D.0, and D.1 cabinets.
- Plenum fan design – backward-curved fan wheel along with an external rotor direct drive variable speed indoor motor.
- Supply fan speed adjustments can be made using the Symbio™ 700 or Mobile App.
- Motors are electronically protected.
- Variable speed direct drive motors are high efficiency.

Powered or Unpowered Convenience Outlet

- Powered GFCI, 120V/15A, 2 plug, convenience outlet or unpowered GFCI, 120V/20A, 2 plug, convenience outlet.
- When convenience outlet is powered, a service receptacle disconnect is available.
- Convenience outlet is powered from the line side of the disconnect or circuit breaker, and will not be affected by the position of the disconnect or circuit breaker.
- Available to order when through-the-base electrical with disconnect switch or circuit breaker option is selected.

Stainless Steel Drain Pan

- Corrosion and oxidation resistance.
- Constructed of 304 stainless steel.

Stainless Steel Heat Exchanger

- Constructed of 409 stainless steel tubes and 439 stainless steel burners.
- Resistant to corrosion and oxidation and easy to clean.
- High temperature material for more reliability at lower temperatures and higher ventilation rates.
- 15-year stainless steel heat exchanger warranty is standard.

Note: *The stainless steel heat exchanger is standard with the Ultra-Low NOx gas furnace option.*

Through-the-Base Electrical with Circuit Breaker

- Thermal magnetic, molded case, HACR circuit breaker with provisions for through-the-base electrical connections.
- Circuit breaker installed within unit in water tight enclosure.
- Wiring provided from the switch to the unit high voltage terminal block.
- Circuit breaker will provide overcurrent protection, sized per NEC and cULus guidelines, and agency recognized by cULus.

Through-the-Base Electrical with Disconnect Switch

- 3-pole, molded case, disconnect switch with provisions for through-the-base electrical connections.
- Disconnect switch installed within unit in a water tight enclosure.
- Wiring provided from the switch to the unit high voltage terminal block.
- Switch cULus agency recognized.

Note: *Disconnect switch sized per NEC and cULus guidelines but does not replace unit overcurrent protection*

Through-the-Base Gas Piping

- Standard through-the-base gas provisions.
- All required piping, including black steel manual gas shut-off valve, elbows, and union.
- Manual shutoff valve with 1/8-inch NPT pressure tap.
- Requires minor field assembly.

Note: *Through-the-Base gas is not available with Ultra-Low NOx gas furnace option.*

Standard Economizer

- Available with or without barometric relief.
- Fully modulating 0 to 100 percent motor and dampers, minimum position setting, preset linkage, wiring harness with plug, spring return actuator and fixed dry bulb control.
- Barometric relief provides a pressure-operated, gravity-closing damper.
- Barometric relief prevents entrance of outside air during the equipment **off** cycle.
- Optional solid state or differential enthalpy control.
- Arrives in shipping position and must be switched to operating position by the installing contractor.

Manual Outside Air Damper

Rain hood and screen provide up to 50 percent outside air.

Motorized Outside Air Damper

- Once set, when indoor fan starts, outdoor air dampers open to set position.
- When indoor fan shuts down, damper fully closes.

Power Exhaust

- Provides exhaust of return air, when using an economizer.
- Maintain better building pressurization.

Roof Curb

- Designed to connect with the unit's downflow supply and return.
- Provides support and a water tight installation when installed properly.
- Allows field-fabricated rectangular supply/return ductwork to be connected directly to the curb.
- Curb shipped knocked down for field assembly.
- Includes wood nailer strips.

Ventilation Override Operation

- Unit can be set to transition up to 3 different pre-programmed sequences for smoke purge, pressurization, and exhaust.
- Transition occurs when binary input on the Symbio™ controller is closed (shorted) (typically hard wired relay output from a smoke detector/ fire control panel.

  Note: *Requires Symbio™Customer Connection Module, FIASCCM001*.*

Leak Detection Sensors

Unit shall be furnished with a leak detection system from the factory when a circuit refrigerant charge exceeds 3.91 lbs. The leak detection system shall consist of one or more refrigerant detection sensors. When the system detects a leak, the unit controller shall initiate mitigation actions.

Supply-Duct Mounted Temperature Sensor

- Sensing element: Thermistor 10,000 Ohms @ 77°F (25°C)
- Operating environment: 4 to 220°F (-20 to 105°C)
- Wiring connection: 8AWG, Sleeving for wire leads is acrylic #5 awg grade C rated @ 155°C
- Drift rate: 0.04°F (0.02°C) after 10 years within temperature range

Silicon Recitifier Controlled (SCR) Device

- Microprocessor based burst-fire controller/ SSR
- Low voltage control
- Output status indicator
- 0-100% control range
- Synchromized triggering output (P3)
- Master – Slave Burst Control System
- 20 AC Cycles Base Period
- Couple with the supply-duct mounted temperature sensor and Symbio™ 700 controls, allows use of energy efficient dula max algorithm.

The AHRI Certified mark indicates Trane U.S. Inc. participation in the AHRI Certification program. For verification of individual certified products, go to ahridirectory.org.

Trane - by Trane Technologies (NYSE: TT), a global innovator - creates comfortable, energy efficient indoor environments for commercial and residential applications. For more information, please visit trane.com or tranetechnologies.com.

Trane has a policy of continuous product and product data improvements and reserves the right to change design and specifications without notice. We are committed to using environmentally conscious print practices.

PKGP-PRC023F-EN 18 Jul 2026
Supersedes PKGP-PRC023E-EN (May 2026)

©2026 Trane