Product Catalog

# Electric Wall FIN Architectural Convectors

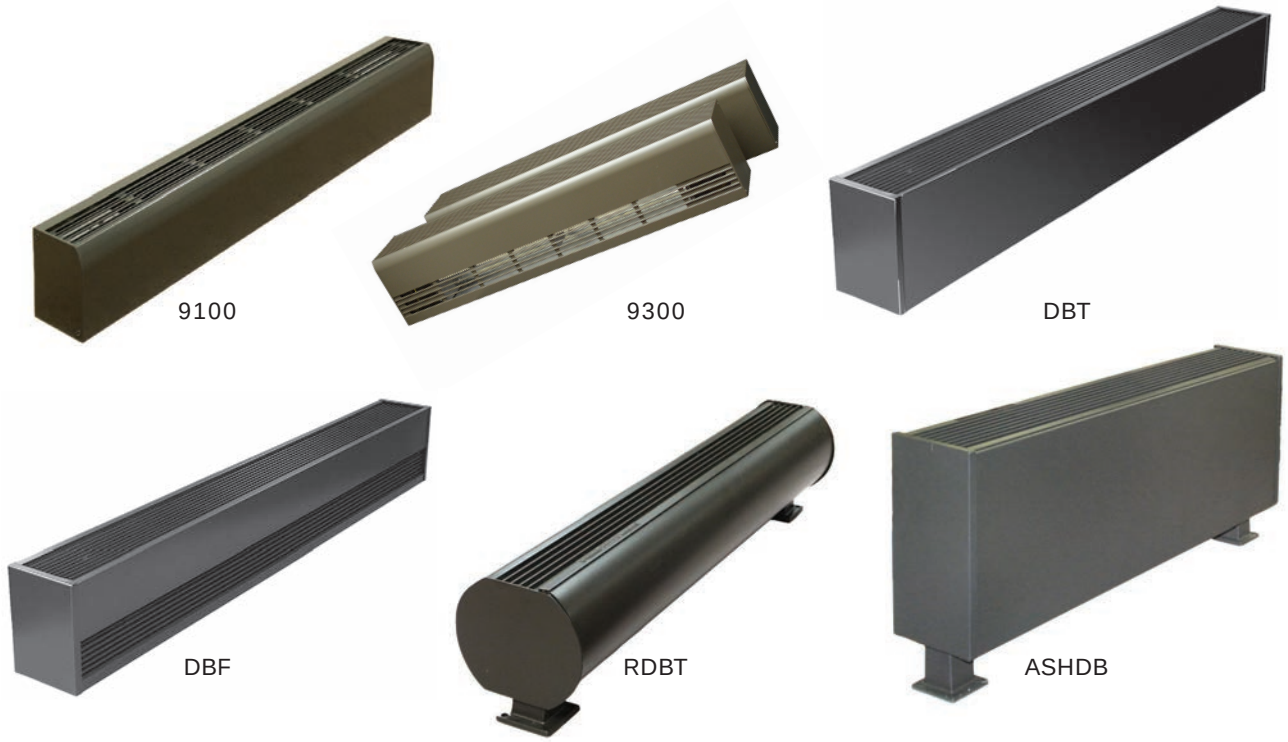


April 2020

**FIN-PRC011B-EN**

# Introduction

## Copyright



## Trademarks

# Table of Contents

# General Information

Trane electric natural convection heavy duty wall FIN has been designed to be securely attached to the wall or as an option floor mounted on pedestals. Trane wall FIN is ideally suited as a primary heating source, a supplement in high heat loss areas or as a draft barrier to help minimize cold wall and window conditions. Because of its rugged construction, wall FIN is especially recommended for public areas in commercial institutional applications such as offices, school, hospitals, transportation terminals, churches, dormitories and nursing homes.

The range of sizes and heat outputs can be individually combined to form a truly custom comfort system. The wide variety of colors, materials and accessories become architecturally compatible with any interior concept and design.

## Enclosure Options

**Table 1. Electric wall FIN models enclosure measurement**

| Model | Height (inches) | Width (inches) |
|---|---|---|
| 9100 | 4 1/2 (114 mm) | 3 1/16 (76 mm) |
| 9300 | 7 1/2 (190 mm) | 6 3/20 (156 mm) |
| DBF/DBT | 6 (152 mm) | 3 1/2 (89 mm) |
| RDBT | 7 (178 mm) | 6 (152 mm) |
| ASHDB | 8 (203 mm) to 20 (508 mm) | 5 1/2 (140 mm) |

**Note:** With extended enclosures and control sections, the maximum overall length is 10 feet (3.05 m).

- Front intake models may be installed directly on finished floor.
- 2 feet (0.6 m) minimum length for heated section to 10 feet (3.05 m) maximum overall length.
- 1/4 inch (6.4 mm) pencil proof top discharge extruded aluminum grills.
- Easy to install clam shell design with snap fit front and back two piece construction.
- Totally enclosed junction boxes.
- Full length thermal overload capillary limit control for overheat protection.
- Aluminum fins mechanically bonded to stainless steel tube for proper heat transfer.
- Standard 1/2 inch (13 mm) EMT raceway between junction boxes.
- Thermostats and disconnect switches sized for NEC compliance.
- Transformer relays and power relays for control connection to building systems.
- Custom lengths from 2 feet (0.6 m) to 10 feet (3.05 m) in 1/16 inch (0.15 mm) to fit any installation.
- Blank enclosures for all models cannot be modified to allow branch circuit wiring.
- 1/4 inch (6.4 mm) wire mesh option is factory installed on enclosure.
- No visible mounting screws.
- Pedestal options available for floor mounting with wire way through the pedestal.
- Control sections available for factory mounting controls 6 inches (152 mm) or 12 inches (305 mm).

  ***Note:*** *A control section is needed with optional transformer relay or power relay. A thermostat and disconnect switch can be mounted in the standard length with the junction box supplied on all standard units. To add a control section, you must add extended enclosure of equal length to house control section.*

# Features and Benefits

## Model 9100

- Architectural radius front design for modern contour design.
- Wall mounted (bottom air inlet and top air discharge) two piece snap fit construction.
- 4 1/2 inch (114.3 mm) high X 3 1/8 inch (78.74 mm) deep 14 gauge (1.9 mm) extruded aluminum.
- 250 watts per foot (820 watts per meter) maximum wattage.
- ETL listed for industrial, commercial and residential applications.
- Optional pedestal mounting with 3 inch (76 mm) factory installed pedestals.

## Model 9300

- Architectural radius front design for modern contour design.
- Wall mounted (bottom air inlet and top air discharge) two piece snap fit construction.
- Wall mounted (front air inlet and top air discharge) for mounting directly on floor.
- 7.5 inch (190.5 mm) X 6.15 inch (156.21 mm) deep 12 gauge (2.7 mm) extruded aluminum.
- Available with one, two or three elements. The three element units can be used on 3 phase.
- 208-240-277-347-480-600 volt models single phase with one, two or three elements.
- 208-240-480-600 volt models can be three phase when ordered with three elements.
- Three phase heaters have a minimum 300 watts per foot (984 watts per meter).
- 480 volt single phase units are minimum 36 inch heated length (914 mm).
- 600 volt single phase units are minimum 48 inch heated length (1219 mm).
- 347-480-600 volt single phase units and all three phase units require factory low voltage control.
- Optional pedestal mounting with 3 inch (76 mm) factory installed pedestals.
- ETL listed for industrial or commercial use. Not suitable or ETL listed for residential use.

## Model DBF

- Wall mounted architectural unit with squared front cover.
- Wall mounted (front air inlet and top air discharge) two piece snap fit construction.
- 6 inch (152 mm) X 3 1/2 inch (89 mm) units can be mounted directly on floor.
- Two piece snap fit front and back of extruded aluminum with 12 gauge (2.7 mm).
- 250 watts per foot (820 watts per meter) maximum wattage.
- 120-208-240-277 volt single phase applications.
- Optional pedestal mounting with 3 inch (76 mm) factory installed pedestals.
- ETL listed for industrial or commercial use. Not suitable or ETL listed for residential use.

## Model DBT

- Wall mounted architectural unit with squared front cover.
- Wall mounted (bottom air inlet and top air discharge) two piece snap fit construction.
- 6 inch (152 mm) X 3 1/2 inch (89 mm) units must be mounted minimum 3 inches (76.2 mm) above finish floor.
- Two piece snap fit front and back of extruded aluminum 12 gauge (2.7 mm).
- 300 watts per foot (984 watts per meter) maximum wattage.

- 120-208-240-277 volt single phase applications.
- Optional pedestal mounting with 3 inch (76 mm) factory installed pedestals.
- ETL listed for industrial or commercial use. Not suitable or ETL listed for residential use.

## Model ASHDB

- Wall mounted (bottom air inlet and top air discharge).
- Enclosure front and back panel are manufactured from 16 gauge(1.5 mm thickness) steel.
- Snap fit two piece construction with one piece continuously extruded discharge grill.
- All units are 5 1/2 inches depth and available in the 7 custom built lengths - 8 inches (203 mm), 10 inches (254 mm), 12 inches (305 mm), 14 inches (356 mm), 16 inches (406 mm), 18 inches (457 mm), 20 inches (508 mm).
- Optional pedestal mounting with 3 inch (76 mm) factory installed pedestals.
- 120-208-240-277 volt single phase applications.
- 500 watts per foot(1640 watts per meter) maximum wattage.
- ETL listed for industrial or commercial use. Not suitable or ETL listed for residential use.

## Model RDBT

- Architectural design with rounded front and back extruded aluminum panels.
- Pedestal mounted with 2 inches (50.8 mm) factory installed pedestal with mounting sleeve.
- 6-inch high (152.4 mm) X 7-inch deep (177.8 mm) for total 8-inch (203.2 mm) height with pedestals.
- Round contour architectural enclosure manufactured from 12 gauge (2.7 mm) aluminum.
- Maximum wattage is 300 watts per foot (984 watts per meter).
- Extruded aluminum discharge grill traverses the entire length of the enclosure.
- Not suitable for residential use.

## Heating Elements

Heating elements are manufactured with the highest quality nickel chromium alloy resistance wire embedded and completely encased by magnesium oxide enclosed in a stainless steel sheath. The stainless steel tube has aluminum fins mechanically bonded to the sheath for efficient heat transfer. The element fin temperature will not exceed 330°F (166°C) to assure extended element life. The heating element is center anchored and free floating at each end on nylon bushings for quiet operation.

## Thermal Overload

Manual reset hydraulic thermal overload covers the full length of the heating element and shuts down the heater when safe operating temperatures are exceeded.

# Volts and Phase

**Table 2. Volts and phase**

| Model | Phase | Volts | | | | | |
|---|---|---|---|---|---|---|---|
| 9100 | Single Phase only | 120 | 208 | 240 | 277 | | |
| 9300 | Single Phase | 208 | 240 | 277 | 347 | 480 | 600 |
| | Three Phase | 208 | 240 | 480 | 600 | | |
| DBF<br>DBT<br>RDBT<br>ASHDB | Single Phase only | 120 | 208 | 240 | 277 | | |

# Controls and Wiring

## Controls

**Table 3. Controls and catalog numbers**

| Description | Catalog Number | |
|---|---|---|
| Thermostat Single Pole | ITS - 9100, 9300, DBF-DBT, RDBT, ASHDB | • Rated 25 amps at 120-277 Vac. 50-110°F temperature range.<br>• Tamper proof and adjustable through top discharge louver. |
| Thermostat Double Pole | ITD - 9100, 9300, DBF-DBT, RDBT, ASHDB | • Rated 25 amps at 120-277 Vac. 50° F to 110°F temperature range.<br>• Tamper proof and adjustable through top discharge louver. |
| Disconnect Switch - Double Pole Single Phase Applications | IDS - 9100, 9300, DBF-DBT, RDBT, ASHDB | • Double pole for single phase application.<br>• Maximum amp load 16 amps at 120-277 Vac.<br>• The disconnect switch is rated 20 amps and must be derated 20% to comply with NEC. |
| | IDS 40 - 9300 (340,480,600 Volt Models) | • Double pole for single phase applications.<br>• Maximum amp load 32 amps at 347-600 Vac.<br>• The disconnect switch is rated 40 amps and must be derated 20% to comply with NEC. |
| Disconnect Switch - Three Pole, Three Phase Applications | IDS30 - 9300 | • 3 pole disconnect switch for use on three phase three element heaters - 22.5 amps at 208-240 Vac.<br>• Disconnect switch is rated 30 amps and must be derated 20% to comply with NEC. |
| | IDS40 - 9300 | • 3 pole disconnect switch for use on three phase three element heaters - 32 amps at 480-600 Vac.<br>• Disconnect switch is rated 40 amps and must be derated 20% to comply with NEC. |

## Field Wiring with Integral Controls

- Integral thermostats can be wired from either end of the heater.
- Disconnect switch has right hand wire entry.
- Thermostat - disconnect switch has right hand wire entry.
- Relay has right hand wire entry and control section.
- Thermostat - disconnect switch and relay have right hand wire entry and control section.

When heaters are furnished with controls, make sure that the heaters do not exceed the lowest amperage rating of the controls furnished. For example, if a thermostat and disconnect switch are furnished, the thermostat is rated at 25 amps 240 and 277 Vac. The disconnect switch is rated at 16 amps 240 and 277 Vac. Therefore, the combination of heaters must not exceed the 16 amp rating of the lowest rated component.

# Controls Options

**Table 4. Element heaters - watts per foot**

| Single element heaters | | | | | | | | |
|---|---|---|---|---|---|---|---|---|
| **Model** | **Watts per Foot** | | | | | | | |
| 9100 | 100 | 125 | 150 | 165 | 187 | 200 | 250 | |
| 9300 | 100 | 125 | 150 | 165 | 187 | 200 | 250 | |
| DBF | 100 | 125 | 150 | 165 | 187 | 200 | 250 | |
| DBT | 100 | 125 | 150 | 165 | 187 | 200 | 250 | 300 |
| RDBT | 100 | 125 | 150 | 165 | 187 | 200 | 250 | 300 |
| ASHDB | 100 | 125 | 150 | 165 | 187 | 200 | 250 | |
| **Two element heaters** | | | | | | | | |
| **Model** | **Watts per Foot** | | | | | | | |
| 9300 | 200 | 250 | 300 | 330 | 374 | 500 | | |
| ASHDB | 200 | 250 | 300 | 330 | 374 | 500 | | |
| **Three element heaters** | | | | | | | | |
| **Model** | **Watt per Foot** | | | | | | | |
| 9300 | 300 | 375 | 450 | 495 | 561 | 600 | 750 | |

The built in thermostats are rated for 25 amps on all single phase units 120 - 277 Vac. These can be used for maximum amp rating for line voltage applications on all units 120 - 277 Vac. The built in disconnect switches used on all electrical equipment is required to be derated to 80% of the listed rating of the device. On all single phase units 120 - 277 Vac, the built in disconnect switch is listed at 20 amps and with required derating the maximum use is 16 amps.

The 9300 series is available with voltages up to 600 volts and three phase applications. The maximum rating for three phase disconnect switch is 40 amps up to 600 volts and with the required derating the units can be used with maximum 32 amps on all three phase applications.

- ITS: Single pole thermostat rated 25 amps is mounted in the left hand junction box and factory wired to be adjustable through the discharge grill with slot for screw driver adjustment. Single pole thermostat have a high/low setting and are not positive off type switch.

  ***Note:*** *347, 480, and 600 volt units and all three phase model have low voltage transformer and ITS thermostat is used as a pilot duty switch and is not wired directly to heater voltage.*

- ITD: Double pole thermostat rated 25 amps is mounted in the left hand junction box. A factory wire to be adjustable through the discharge grill with slot for screw driver adjustment double pole thermostat have off position for disconnecting means on single phase heaters.
- IDS: Double pole disconnect switch used on single phase applications is a rocker type switch and is adjustable through the discharge grill. This switch is rated at 20 amps and requires derating to 80% of rated amp listing. It used on all single phase applications up to 16 amps max.
- IDS 30: Three pole disconnect switch for use on three phase applications for 9300 series. This switch is rated 30 amps at 208 or 240 volt and maximum amp usage with derating is 24 amps.
- IDS 40: Three pole disconnect switch for use on three phase applications for 9300 series. This is rated 40 amps up to 600 volts and maximum amp usage with derating is 32 amps.
- ATR: Transformer relay single pole rated 25 amps, 120 - 277 Vac. Specify primary voltage for transformer is 120 - 277 volt and secondary voltage (24 or 120 volt) for control circuit. Low voltage included in 347-480-600 volt single phase units and all three phase units are built standard with low voltage transformer and contactor which is factory installed and wired.
- PR: Power relays with 24 volt coil with single phase 208-240-277 volt units.

***Note:*** *A control section option is required on all units to accommodate optional ATR and PR power relays with transformers. This requires 6 inches (152.4 mm) or 12 inches (305 mm) added extension to the length of the heater enclosure not to exceed 10 feet (3 m) total length.*

# Control Sections

- A 6-inch (152 mm) long control section for factory mounting of 1 or 2 controls. A 6-inch control section is not necessary for a thermostat or disconnect switch. With a PR or ATR, control section is required on all but the 9300 series units. The control section can be mounted on the right or left side of the heater section with the right side being the standard construction unless it is specified.
- A 12-inch (305 mm) long control sections are available for use with multiple controls.

  ***Note:*** *Control sections are field wired to the heater section, and the use of extended enclosure to house the control section must not extend the enclosure over 10 feet (3m).*
- Accessories are approved for 40 amps wireways, and are of the same material and compatible design as the heater section.
  - Inside corners 90 - 180 degrees.
  - Outside corners 90 - 270 degrees.
  - End caps for right or left hand installation.
  - 2 inches (51 mm) and 6 inches (152 mm) wall trim.
  - 1 1/2 inch (38 mm) splice plates.
  - 1/4 inch (6.4 mm) wire mesh factory installed under all open discharge grill area.
- Pedestals are required for floor mounting in lobbies and in front of windows. Factory installed to the bottom of the unit for field furnished power wiring to be run through the center of the pedestal into the bottom of the units junctions box for connection to the heater. Available on all 9100, 9300, DBF, DBT, RDBT and on the ASHDB 8-inch (203 mm) units. When pedestals are ordered, the back and side knockouts are not installed on the units.
  - For 2 feet (0.6 m) to 5 feet (1.52 m) heaters, 2 pedestals are required.
  - For 6 feet (1.83 m) to 8 feet (2.44 m) heaters, 3 pedestals are required.
  - For 9 feet (2.74 m) to 10 feet (3.05 m) heaters, 4 pedestals are required.
- Finished back can be ordered when mounting the units in an installation where the back of the units will be visible to the public as in front of windows options. With this option, the knockouts or fasteners are not visible from the rear view of the installed units. The back of the unit is painted the same color as the front grill and end caps.
- Blank enclosures are manufactured with the same material as the heater sections. The blank enclosure is used when fill in to wall or mullions are required. Blank enclosures are made with 1 feet (0.3408 m) increments not to exceed 10 feet (3.048 m) total lengths. Blank enclosures do not have open air intake or air discharge grills.
- Trane EWFB are powder coated with the highest quality powder coated paint. Standard colors available are Eggshell White, White, Beige, Ivory, Motor Gray, Primer Gray, Driftwood Gray, Bankers Bronze, Black. Special colors are available. Price and availability should be checked per order. Anodized finishes are not available on any Trane EWFB units.

# Wiring Diagrams

**Figure 1. Single phase wiring**

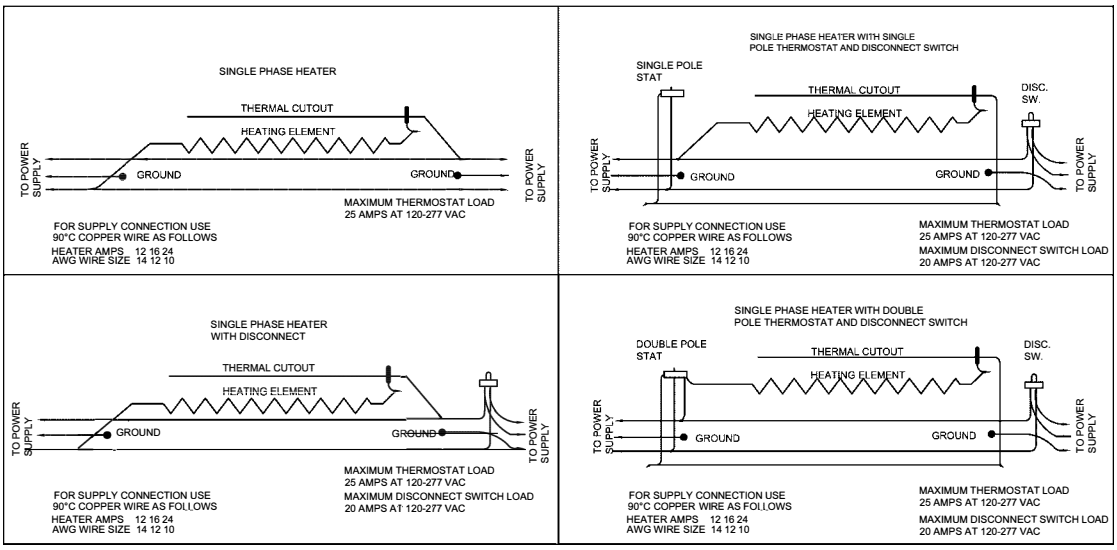


## TYPICAL WIRING DIAGRAMS-CONTROL SECTION

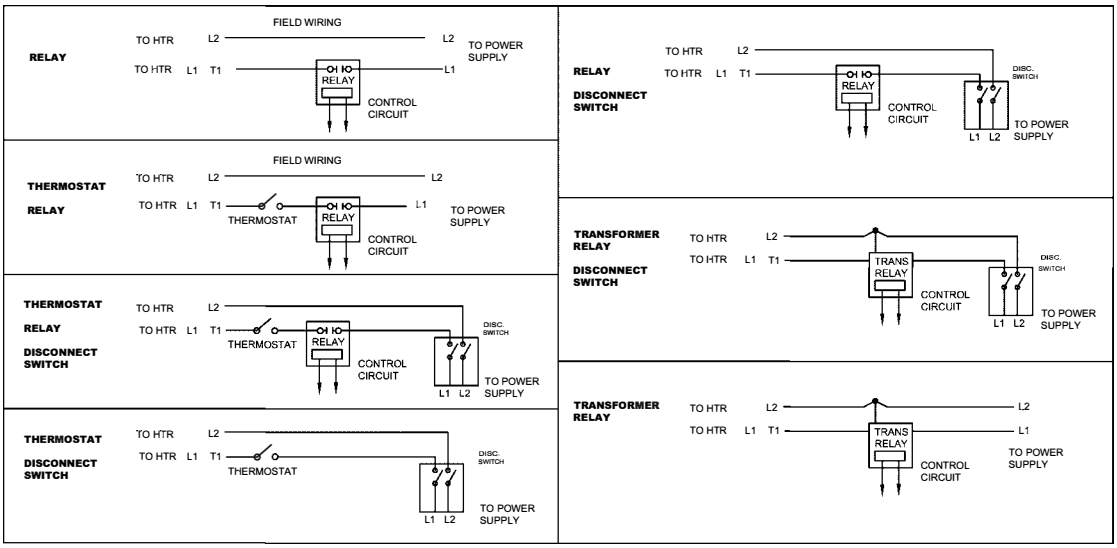

**Figure 2. Three phase wiring**

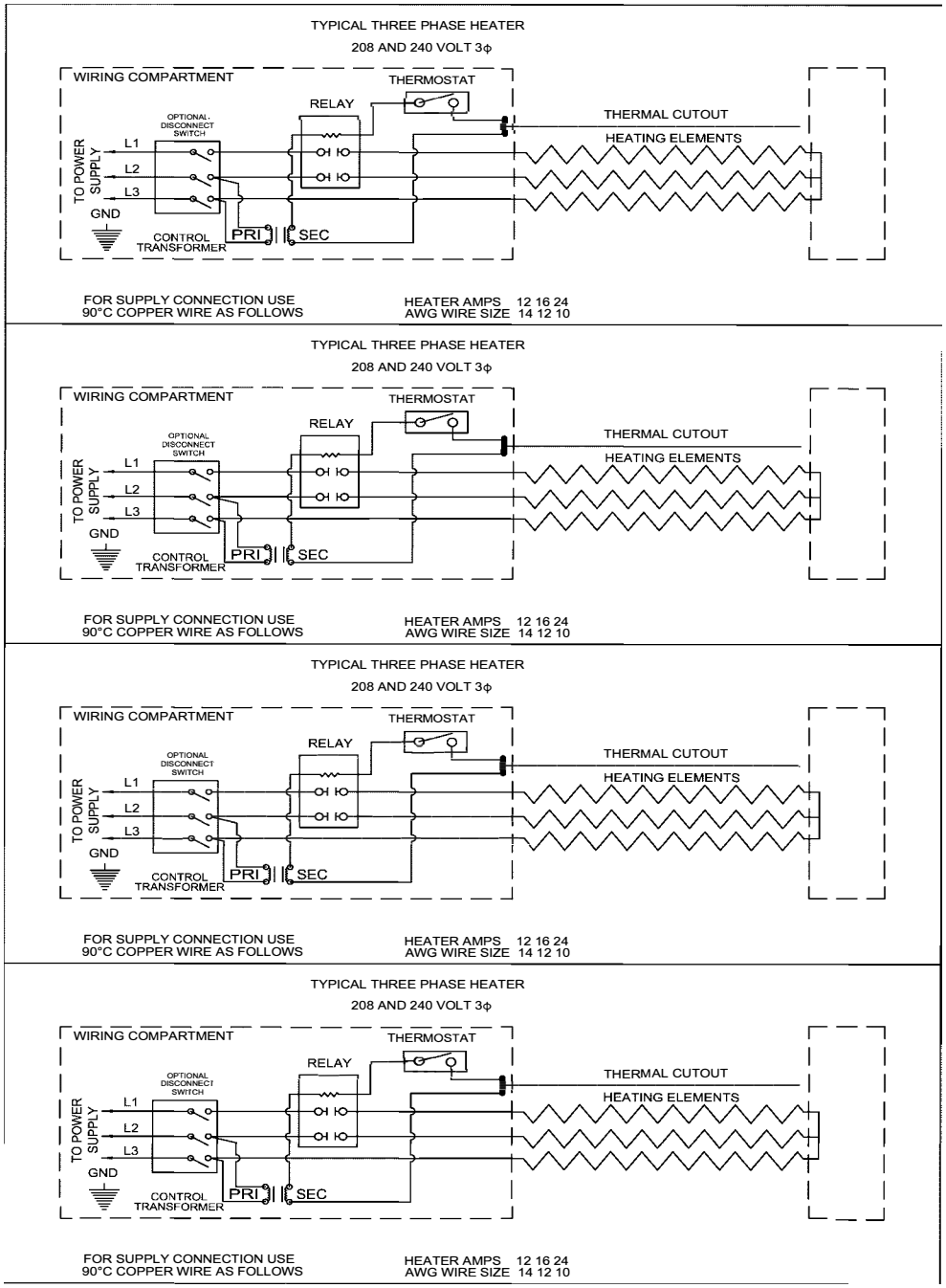

# Mechanical Specifications and Dimensions

Natural convection heavy-duty electric wall fin are furnished to meet the specified wattage, voltage and size. Units are installed and wired in accordance with the manufacturers' recommendations and applicable national and local codes.

## Mounting

Electric wall fin heaters are designed to be securely attached to the wall (or optional floor mounted pedestals) as per the manufacturers' instructions. Heaters are wired for either right or left hand entry where there are no controls. Otherwise, entry will be in the junction box containing controls. Heaters with bottom air intake and top air discharge, and front intake (inlet grille) and top air discharge (both wall and pedestal styles) must be mounted minimum 3 inches (76 mm) above the finished floor.

Heaters with front air intake (inlet grille) and top air discharge can be wall mounted at the finished floor level and are approved for zero clearance at the bottom.

## Heater Design

Units are built with modern architectural design and constructed with specified materials. All units contain totally enclosed junction boxes at both ends. The elements are stainless steel tube with aluminum fins mechanically bonded to the tube for efficient heat transfer. Thermal overloads traverse the entire length of the heater element. All units contain a 1/2-inch (0.03mm) EMT pre wired 40 ampere wireway. Heater lengths are available in 2 foot (0.6 m) through 10 foot (3.0 m) lengths. Knockouts 1/2 inch (13 mm) and 3/4 inch (19 mm) are provided on the side and rear of the heaters junction box to allow end to end wiring for wall mounted units and in the bottom of the junction box only for floor mounted heaters.

Enclosure front panels are one piece construction suitable for architectural, commercial and industrial use. (9100 series is ETL listed for residential use). Top discharge louvers and front intake louvers are 1/4 inch (6.4 mm) pencil-proof design. The top discharge air louver is designed at a 15 degree angle for cleaner operation. The front and back panel are both designed with one piece extruded aluminum for snap fit construction and installation. Units are available from 2 feet (0.6 m) to 10 feet (3 m) enclosures at 1/16 inch (1.5 mm) increments for mullion to mullion fit.

## Extended Enclosures

Heated length of the unit are built in 1 foot (305 mm) increment with punched grill for air discharge. Extended enclosures are available in 1/16 inch (1.5 mm) increments for wall to wall or mullion to million fit with maximum 10 feet (3 m) length. Heaters length and extended enclosure length are furnished as one piece in designated length to fit any application. When using a control section of 6-inch (152 mm) or 12-inch (305 mm), the extended enclosure must match or exceed the control section length not to exceed 10 feet(3 m) overall length. Extended enclosures and control sections do not have open air intake or air discharge grill.

# Series 9100

## Specifications

### Cabinet

3 1/8 inches X 4 1/2 inches X 10 foot maximum length.

9100 Series shall be constructed of 14 gauge extruded aluminum heat treated to T5 hardness. The uni-lock construction shall allow easy installation and access to back plate for wiring. The snap-fit front cover makes installation and service very simple. Custom factory enclosures to 1/16 inch increments are built for exact wall to wall fit up to 10 foot long enclosures. The 14 gauge back plate will have electrical knockouts for incoming power on each end adjacent to the junction box. Pedestal mounted units will have incoming power connection through the pedestal on the bottom of the unit. Finished backs are optional for pedestal mounted units. The die punched front cover will have no screw heads or fasteners.

### Airflow Configuration

9100 Series units are available in bottom inlet and top outlet airflow configuration. The 9100 must be wall mounted minimum 3 inches above finished floor or mounted on optional pedestals.

### Element

High mass sheathed element construction with Nickel-Chromium resistance wire embedded in compacted efficient dielectric to ensure proper heat transfer. Aluminum fins mechanically bonded to stainless steel tube allows for increased surface area and even heat transfer.

### Limit Controls

Manual reset hydraulic thermal overload covers the full length of the heating element and shuts down the heater when safe operating temperatures are exceeded.

### Wiring

Wiring shall be in either end of the enclosure. Wiring can be in the junction box or optional control section if additional controls are required. Pedestal mounted units shall have 1 1/4 inch hole through the pedestal for incoming power wiring. All heaters have a factory supplied built-in raceway for wiring from either end of the heater or for wiring of continuous heater connections.

### Controls

Optional controls include single or double pole thermostat and disconnect switch that are factory wired in enclosed junction box on each end of the heater enclosure. Relay, transformer relay and duplex receptacle options shall be mounted in the extended length control section. The control section will add length to the heater enclosure. The control section for the duplex receptacle will add 4 inches to the length of the enclosure. 6-inch or 12-inch control sections are options depending on control items.

### Application

The 9100 series is ETL listed for commercial, industrial, or residential applications on all units up to 250 watts per foot.

## Dimensions

**Figure 3. 9100 radius front draft barrier heater**

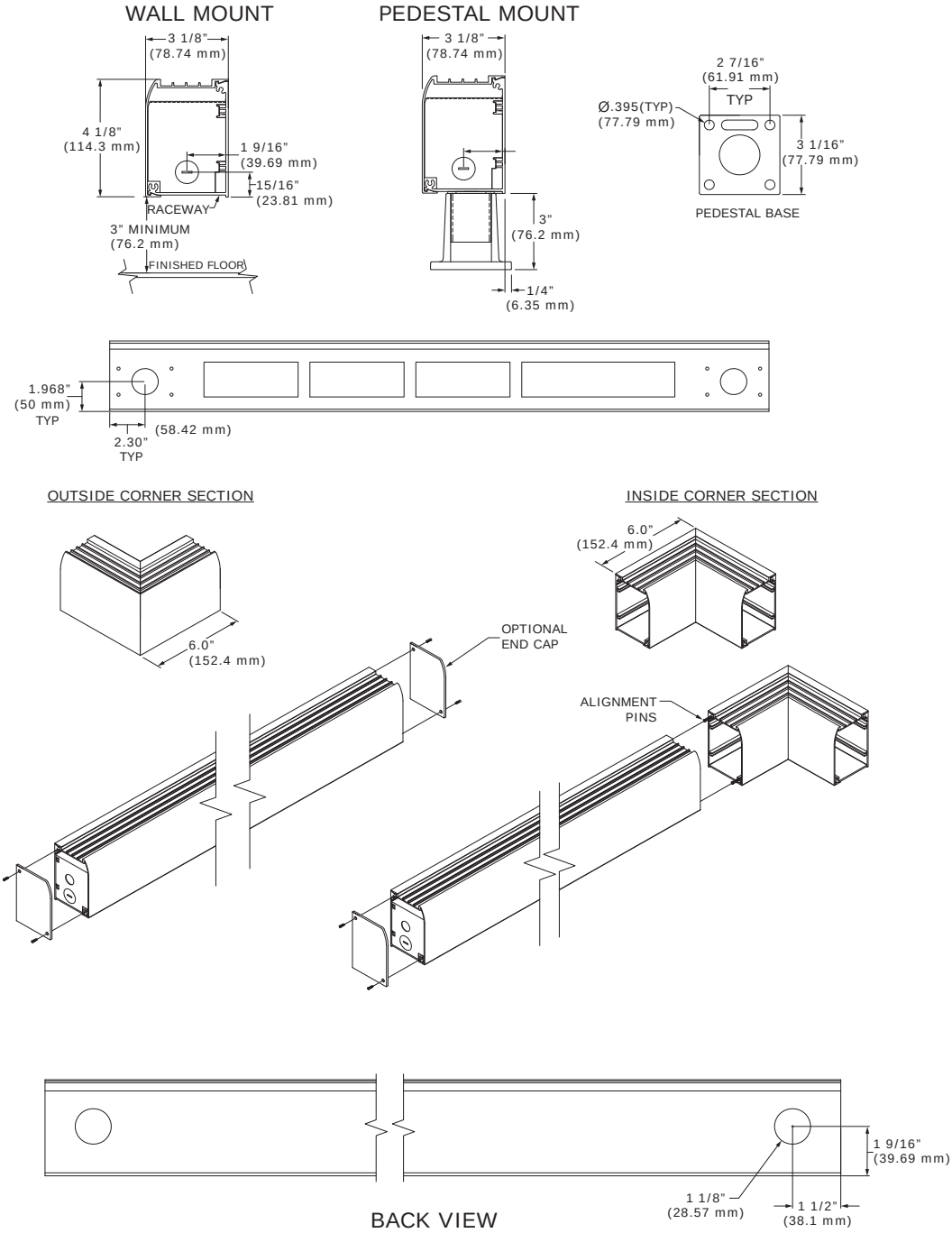

# Series 9300

## Specifications

### Cabinet

6.15 inches X 7.5 inches X 10 foot maximum length.

9300 Series shall be constructed of 12 gauge extruded aluminum heat treated to T5 hardness. The uni-lock construction shall allow easy installation and access to back plate for wiring. The snap-fit front cover makes installation and service very simple. Custom factory enclosures to 1/16 inch increments are built for exact wall to wall fit up to 10 foot long enclosures. The 12 gauge back plate will have electrical knockouts for incoming power on each end adjacent to the junction box. Pedestal mounted units will have incoming power connection through the pedestal on the bottom of the unit. Finished backs are optional for pedestal mounted units. The die punched front cover will have no screw heads or fasteners.

### Airflow Configuration

9300 Series units are available with front inlet top outlet (F) or with bottom inlet top outlet (B) configuration. The front inlet (F) can be mounted directly on the floor or wall mounted with no minimum clearance above finished floor. The bottom inlet (B) must be mounted minimum 3 inches above finished floor. Both models are available with optional pedestal mounted applications.

### Element

High mass sheathed element construction with Nickel-Chromium resistance wire embedded in compacted efficient dielectric to ensure proper heat transfer. Aluminum fins mechanically bonded to stainless steel tube allows for increased surface area and even heat transfer.

### Limit Controls

Manual reset hydraulic thermal overload covers the full length of the heating element and shuts down the heater when safe operating temperatures are exceeded.

### Wiring

Wiring shall be in either end of the enclosure. Wiring can be in the junction box or optional control section if additional controls are required. Pedestal mounted units shall have 1 1/4 inch hole through the pedestal for incoming power wiring. All heaters have a factory supplied built-in raceway for wiring from either end of the heater or for wiring of continuous heater connections.

### Controls

Optional controls include single or double pole thermostat and disconnect switch that are factory wired in enclosed junction box on each end of the heater enclosure. Relay, transformer relay and duplex receptacle options shall be mounted in the extended length control section. The control section will add length to the heater enclosure. The control section for the duplex receptacle will add 4 inches to the length of the enclosure. 6-inch or 12-inch control sections are options depending on control items.

### Application

9300 series is ETL listed for commercial or industrial applications on all units up to 750 watts per foot. The 9300 is available in 3 phase applications with a minimum wattage of 300 watts per foot. The 3 phase units must have 3 elements to allow for balanced 3 phase power applications. 9300 series is not ETL listed or suitable for residential applications.

## Dimensions

**Figure 4. 9300 radius front draft barrier heater**

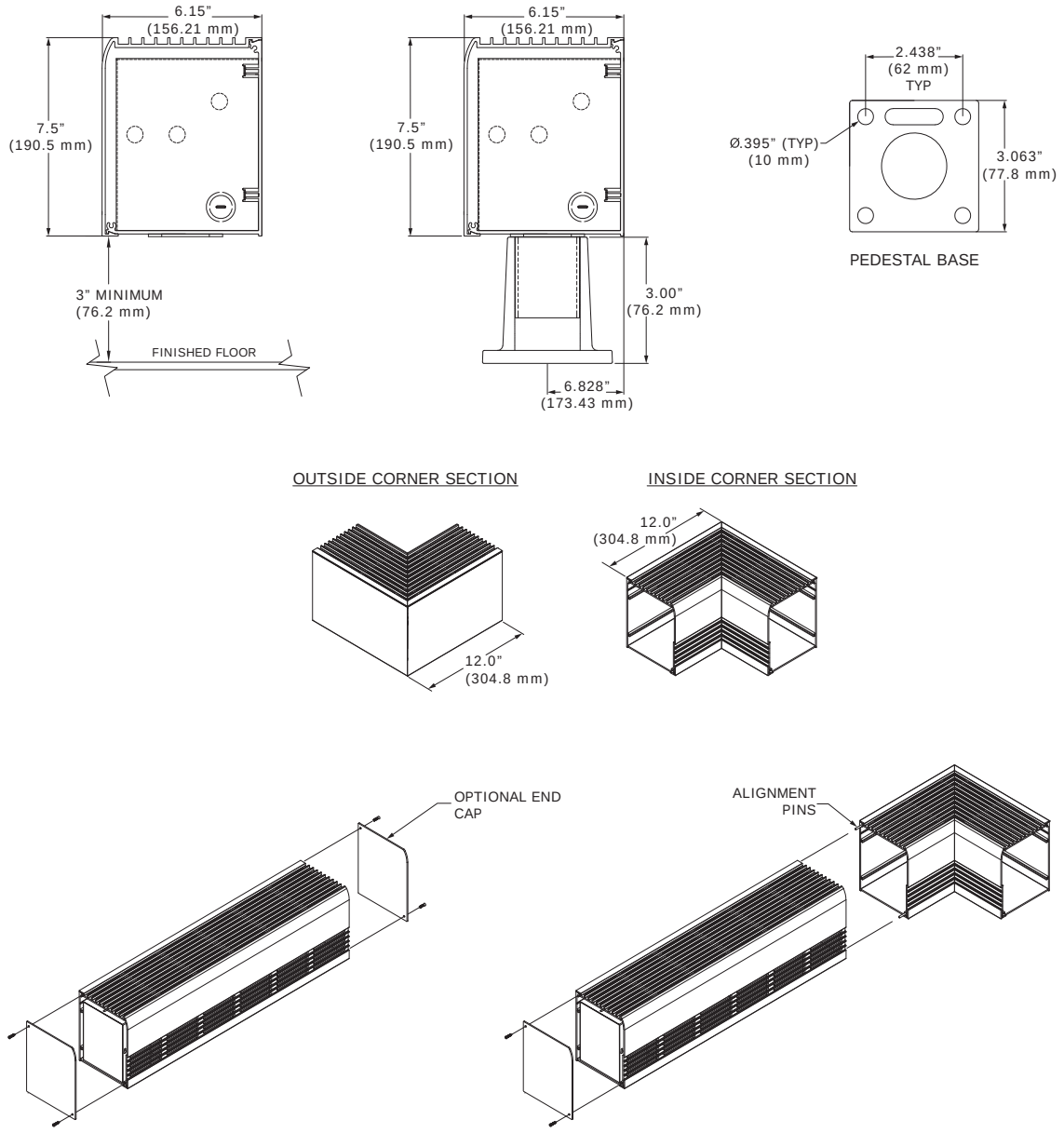

# DBF/DBT

## Specifications

### Cabinet

3 1/2 inches X 6 inches X 10 foot maximum length.

DBF/DBT Series shall be constructed of 12 gauge extruded aluminum heat treated to T5 hardness. The uni-lock construction shall allow easy installation and access to back plate for wiring. The snap-fit front cover makes installation and service very simple. Custom factory enclosures to 1/16 inch increments are built for exact wall to wall fit up to 10 foot long enclosures. The 12 gauge back plate will have electrical knockouts for incoming power on each end adjacent to the junction box. Pedestal mounted units will have incoming power connection through the pedestal on the bottom of the unit. Finished backs are optional for pedestal mounted units. The die punched front cover will have no screw heads or fasteners.

### Airflow Configuration

DBF Series is front inlet and top outlet airflow configuration. DBF can be mounted on wall or directly on the floor. Optional pedestals available for pedestal mount. DBT Series is bottom inlet and top outlet airflow configuration. DBT must be wall mounted minimum 3" above finished floor or installed on optional pedestals.

### Element

High mass sheathed element construction with Nickel-Chromium resistance wire embedded in compacted efficient dielectric to ensure proper heat transfer. Aluminum fins mechanically bonded to stainless steel tube allows for increased surface area and even heat transfer.

### Limit Controls

Manual reset hydraulic thermal overload covers the full length of the heating element and shuts down the heater when safe operating temperatures are exceeded.

### Wiring

Wiring shall be in either end of the enclosure. Wiring can be in the junction box or optional control section if additional controls are required. Pedestal mounted units shall have 1 1/4" hole through the pedestal for incoming power wiring. All heaters have a factory supplied built-in raceway for wiring from either end of the heater or for wiring of continuous heater connections.

### Controls

Optional controls include single or double pole thermostat and disconnect switch that are factory wired in enclosed junction box on each end of the heater enclosure. Relay, transformer relay and duplex receptacle options shall be mounted in the extended length control section. The control section will add length to the heater enclosure. The control section for the duplex receptacle will add 4 inches to the length of the enclosure. 6-inch or 12-inch control sections are options depending on control items.

### Application

The DBF/DBT is ETL listed for commercial or industrial application on all units. DBF floor mounted units are available with maximum 250 watts per foot. DBT wall mounted units are available with maximum 300 watts per foot. The DBF/DBT is not suitable or ETL listed for residential applications.

## Dimensions

**Figure 5. DBF-DBT architectural pedestal heaters**

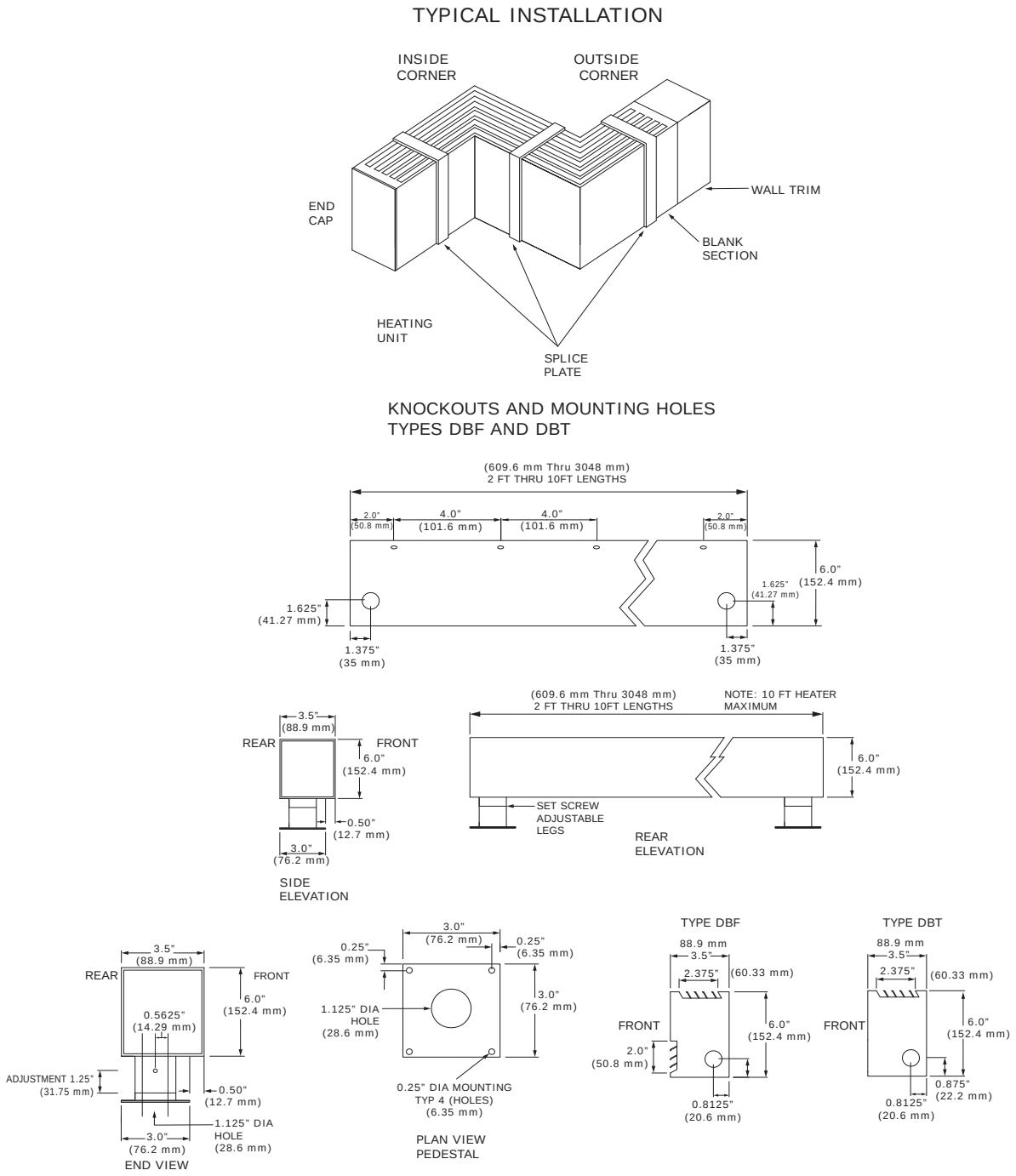

# RDBT

## Specifications

### Cabinet

RDBT series shall be constructed of 12 gauge extruded aluminum heat treated to T5 hardness. The uni-lock construction shall allow easy installation and access to back plate for wiring. The snap fit front cover makes installation and service very simple. Custom factory enclosures to 1/16 inch increments are built for exact wall to wall fit up to 10 foot long enclosures. All RDBT units are pedestal mounted with three inch pedestals to ensure mounting of units for minimum clearance from floor. All RDBT will have incoming power feed through the pedestal to junction box on either end of the enclosures. The round extruded front and back of the unit will have no screw heads or fasteners.

### Airflow Configuration

The RDBT is bottom inlet and top outlet airflow configuration. All RDBT units will have standard pedestal mounting included with the enclosure. This ensures minimum mounting of 3 inches above finished floor for bottom inlet units.

### Element

High mass sheathed element construction with Nickel-Chromium resistance wire embedded in compacted efficient dielectric to ensure proper heat transfer. Aluminum fins mechanically bonded to stainless steel tube allows for increased surface area and even heat transfer.

### Limit Controls

Manual reset hydraulic thermal overload covers the full length of the heating element and shuts down the heater when safe operating temperatures are exceeded.

### Wiring

Wiring shall be in either end of the enclosure. Wiring can be in the junction box or optional control section if additional controls are required. Pedestal mounted units shall have 1 1/4 inch hole through the pedestal for incoming power wiring. All heaters have a factory supplied built in raceway for wiring from either end of the heater or for wiring of continuous heater connections.

### Controls

Optional controls include single or double pole thermostat and disconnect switch that are factory wired in enclosed junction box on each end of the heater enclosure. Relay, transformer relay, and duplex receptacle options shall be mounted in the extended length control section. The control section will add length to the heater enclosure. The control section for the duplex receptacle will add 4 inches to the length of the enclosure. 6-inch or 12-inch control sections are options depending on control items.

### Application

The RDBT model is suited for commercial or industrial applications on all units. The round architectural extrusions are designed for custom look and features for wall to wall or mullion to mullion fit in high traffic areas such as lobbies or entrance ways in commercial applications.

## Dimensions

**Figure 6. RDBT architectural pedestal heaters (100 - 300 Watt per foot)**

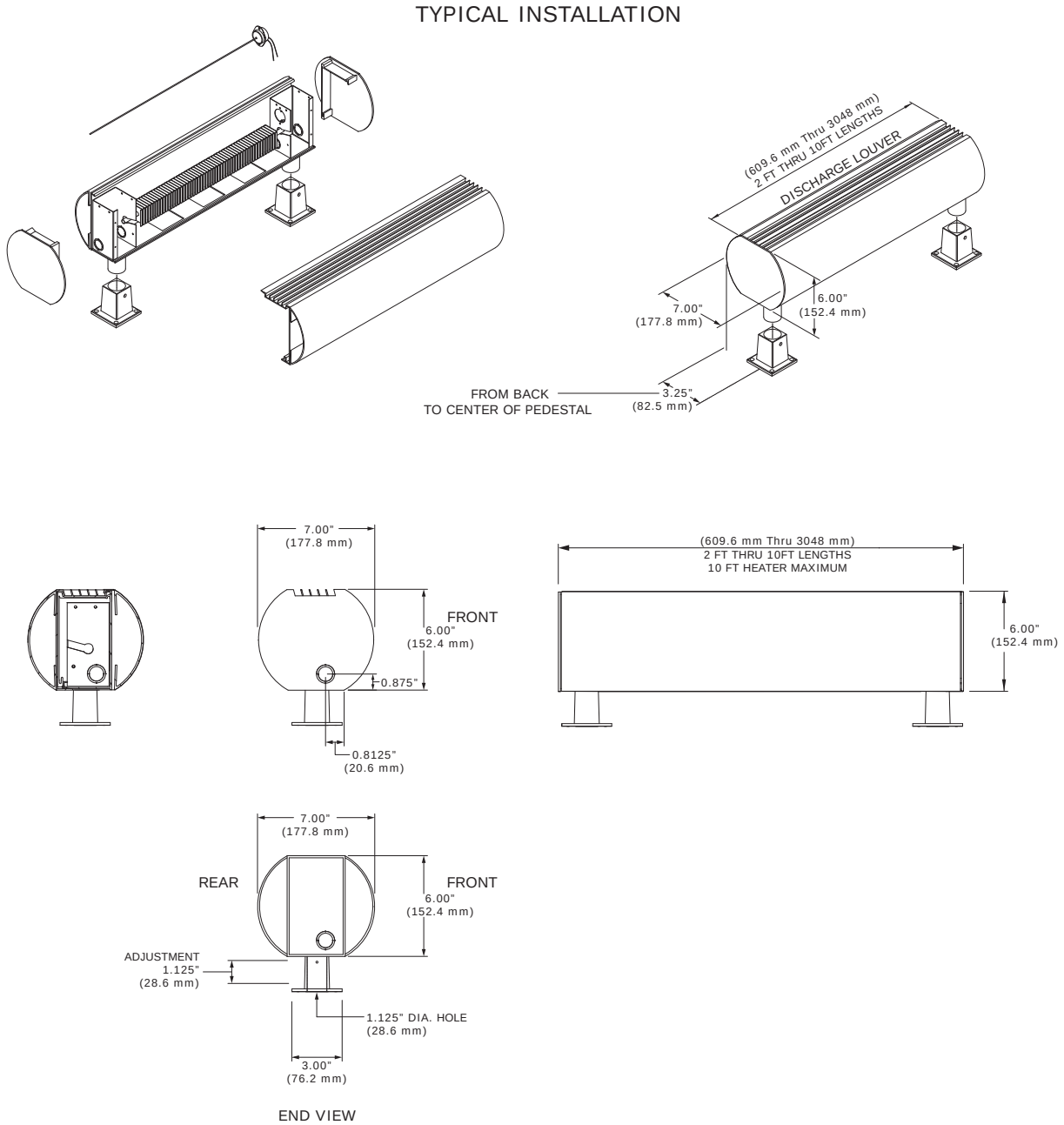

# ASHDB

## Specifications

### Cabinet

5 1/2 inches wide X 8 inches through 20 inches high X 10 foot maximum.

ASHDB series enclosure front and back panels are manufactured from 16 gauge (1.5 mm thickness) steel and is snap fit two piece construction. Discharge grill is 12 gauge (2.7 mm thickness) one piece continuous extruded aluminum.

### Airflow Configuration

ASHDB series is bottom inlet top outlet airflow configuration. Wall mounted units must be minimum 3 inches above finished floor. Optional pedestal mounts are available.

### Element

High mass sheathed element construction with Nickel-Chromium resistance wire embedded in compacted efficient dielectric to ensure proper heat transfer. Aluminum fins mechanically bonded to stainless steel tube allows for increased surface area and even heat transfer.

### Limit Controls

Manual reset hydraulic thermal overload covers the full length of the heating element and shuts down the heater when safe operating temperatures are exceeded.

### Wiring

Wiring shall be in either end of the enclosure. Wiring can be in the junction box or optional control section if additional controls are required. Pedestal mounted units shall have 1 1/4 inch hole through the pedestal for incoming power wiring. All heaters have a factory supplied built in raceway for wiring from either end of the heater or for wiring of continuous heater connections.

### Controls

Optional controls include single or double pole thermostat and disconnect switch that are factory wired in enclosed junction box on each end of the heater enclosure. Relay, transformer relay and duplex receptacle options shall be mounted in the extended length control section. The control section will add length to the heater enclosure. The control section for the duplex receptacle will add 4 inches to the length of the enclosure. 6-inch or 12-inch control sections are options depending on control items.

### Application

The ASHDB series is ETL listed for commercial and industrial use up to 500 watts per foot. It is not ETL listed or suitable for residential use.

## Dimensions

**Figure 7. ASHDB architectural pedestal heaters**

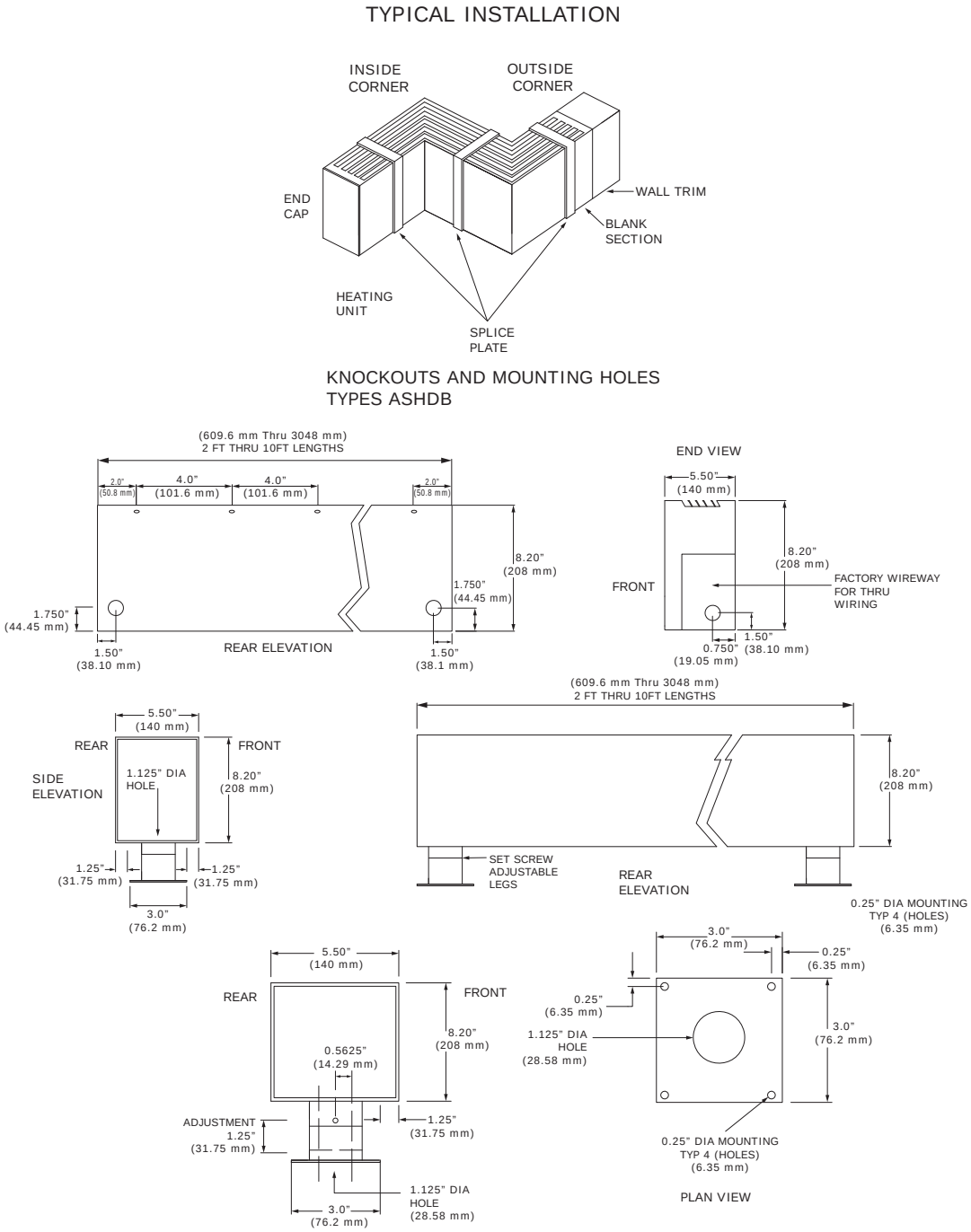

Trane - by Trane Technologies (NYSE: TT), a global climate innovator - creates comfortable, energy efficient indoor environments for commercial and residential applications. For more information, please visit trane.com or tranetechnologies.com.



FIN-PRC011B-EN 24 Apr 2020
Supersedes FIN-PRC011A-EN (Jul 2019)