Installation Instructions

Human Interface Upgrade

Voyager™ 12.5 to 25 Tons, Precedent™ 3 to 10 Tons

⚠SAFETY WARNING

Only qualified personnel should install and service the equipment. The installation, starting up, and servicing of heating, ventilating, and air-conditioning equipment can be hazardous and requires specific knowledge and training. Improperly installed, adjusted or altered equipment by an unqualified person could result in death or serious injury. When working on the equipment, observe all precautions in the literature and on the tags, stickers, and labels that are attached to the equipment.

October 2023 **PART-SVN259A-EN**

Introduction

Read this manual thoroughly before operating or servicing this unit.

Warnings, Cautions, and Notices

Safety advisories appear throughout this manual as required. Your personal safety and the proper operation of this machine depend upon the strict observance of these precautions.

The three types of advisories are defined as follows:

⚠WARNING	Indicates a potentially hazardous situation which, if not avoided, could result in death or serious injury.
⚠CAUTION	Indicates a potentially hazardous situation which, if not avoided, could result in minor or moderate injury. It could also be used to alert against unsafe practices.
NOTICE	Indicates a situation that could result in equipment or property-damage only accidents.

Important Environmental Concerns

Scientific research has shown that certain man-made chemicals can affect the earth's naturally occurring stratospheric ozone layer when released to the atmosphere. In particular, several of the identified chemicals that may affect the ozone layer are refrigerants that contain Chlorine, Fluorine and Carbon (CFCs) and those containing Hydrogen, Chlorine, Fluorine and Carbon (HCFCs). Not all refrigerants containing these compounds have the same potential impact to the environment. Trane advocates the responsible handling of all refrigerants.

Important Responsible Refrigerant Practices

Trane believes that responsible refrigerant practices are important to the environment, our customers, and the air conditioning industry. All technicians who handle refrigerants must be certified according to local rules. For the USA, the Federal Clean Air Act (Section 608) sets forth the requirements for handling, reclaiming, recovering and recycling of certain refrigerants and the equipment that is used in these service procedures. In addition, some states or municipalities may have additional requirements that must also be adhered to for responsible management of refrigerants. Know the applicable laws and follow them.

⚠WARNING

Proper Field Wiring and Grounding Required!

Failure to follow code could result in death or serious injury. All field wiring MUST be performed by qualified personnel. Improperly installed and grounded field wiring poses FIRE and ELECTROCUTION hazards. To avoid these hazards, you MUST follow requirements for field wiring installation and grounding as described in NEC and your local/state/national electrical codes.

⚠WARNING

Personal Protective Equipment (PPE) Required!

Failure to wear proper PPE for the job being undertaken could result in death or serious injury. Technicians, in order to protect themselves from potential electrical, mechanical, and chemical hazards, MUST follow precautions in this manual and on the tags, stickers, and labels, as well as the instructions below:

- **Before installing/servicing this unit, technicians MUST put on all PPE required for the work being undertaken (Examples; cut resistant gloves/sleeves, butyl gloves, safety glasses, hard hat/bump cap, fall protection, electrical PPE and arc flash clothing). ALWAYS refer to appropriate Safety Data Sheets (SDS) and OSHA guidelines for proper PPE.**
- **When working with or around hazardous chemicals, ALWAYS refer to the appropriate SDS and OSHA/GHS (Global Harmonized System of Classification and Labeling of Chemicals) guidelines for information on allowable personal exposure levels, proper respiratory protection and handling instructions.**
- **If there is a risk of energized electrical contact, arc, or flash, technicians MUST put on all PPE in accordance with OSHA, NFPA 70E, or other country-specific requirements for arc flash protection, PRIOR to servicing the unit. NEVER PERFORM ANY SWITCHING, DISCONNECTING, OR VOLTAGE TESTING WITHOUT PROPER ELECTRICAL PPE AND ARC FLASH CLOTHING. ENSURE ELECTRICAL METERS AND EQUIPMENT ARE PROPERLY RATED FOR INTENDED VOLTAGE.**

⚠WARNING

Follow EHS Policies!

Failure to follow instructions below could result in death or serious injury.

- **All Trane personnel must follow the company's Environmental, Health and Safety (EHS) policies when performing work such as hot work, electrical, fall protection, lockout/tagout, refrigerant handling, etc. Where local regulations are more stringent than these policies, those regulations supersede these policies.**
- **Non-Trane personnel should always follow local regulations.**

Copyright

This document and the information in it are the property of Trane, and may not be used or reproduced in whole or in part without written permission. Trane reserves the right to revise this publication at any time, and to make changes to its content without obligation to notify any person of such revision or change.

Trademarks

All trademarks referenced in this document are the trademarks of their respective owners.

Revision History

Document updated to reflect PART literature number.

Table of Contents

Models Supported 5

- Voyager™ 12.5 to 25 Tons 5
- Precedent™ 3 to 10 Tons 5

General Information 6

- Part Identification 6
- Tools List 7

Voyager™ Light Commercial 8

Precedent™ Unit 11

Models Supported

Voyager™ 12.5 to 25 Tons

All models that have ReliaTel™ controls installed. To identify if ReliaTel controls are installed, validate digit 9 of the model number is an **R**.

Precedent™ 3 to 10 Tons

All models that have ReliaTel controls installed (where digit 9 of the model number is an **R**) **except** Precedent™ A cabinets, which include the following:

Table 1. Precedent™ A cabinet models

TSC036A	YHC036A	THC048A	WSC048A	WSC060A	THC043A
THC036A	WSC036A	YSC048A	TSC060A	THC033A	YHC043A
YSC036A	TSC048A	YHC048A	YSC060A	YHC033A	

To identify the type of Precedent cabinet for older models, view the letter after the model number on the nameplate. For newer models, it is the 30th digit of the model number.

Figure 1. Cabinet identification on nameplate, older models

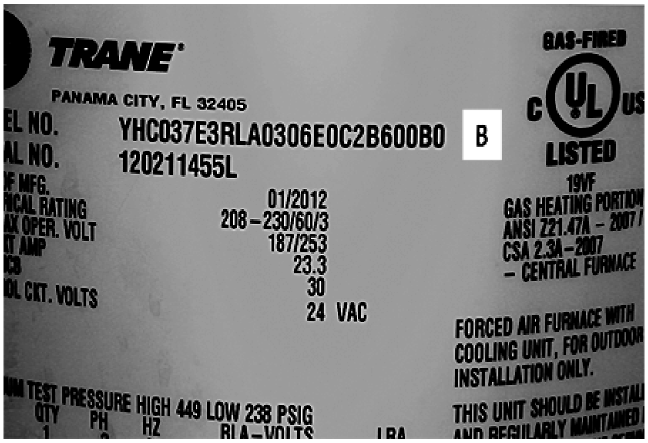
TRANE
PANAMA CITY, FL 32405
EL NO. YHC037E3RLA0306E0C2B600B0
B
AL NO. 120211455L
01/2012
208–230/60/3
187/253
23.3
30
24 VAC
GAS-FIRED
LISTED
19VF
GAS HEATING PORTION
ANSI Z21.47A – 2007 /
CSA 2.3A–2007
– CENTRAL FURNACE
FORCED AIR FURNACE WITH
COOLING UNIT, FOR OUTDOOR
INSTALLATION ONLY.
TEST PRESSURE HIGH 449 LOW 238 PSIG

Figure 2. Cabinet identification on nameplate, newer models

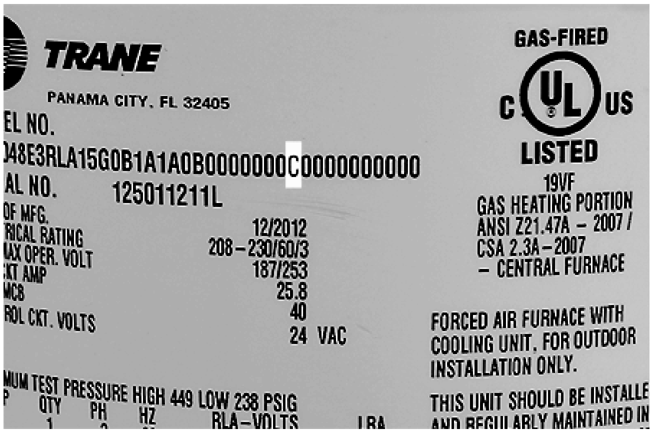
TRANE
PANAMA CITY, FL 32405
EL NO.
48E3RLA15G0B1A1A0B0000000C0000000000
AL NO. 125011211L
12/2012
208–230/60/3
187/253
25.8
40
24 VAC
GAS-FIRED
LISTED
19VF
GAS HEATING PORTION
ANSI Z21.47A – 2007 /
CSA 2.3A–2007
– CENTRAL FURNACE
FORCED AIR FURNACE WITH
COOLING UNIT. FOR OUTDOOR
INSTALLATION ONLY.
TEST PRESSURE HIGH 449 LOW 238 PSIG

General Information

The information provided in this manual is intended for use when adding human interface support to a Precedent™ or Voyager™ Light Commercial unit that has ReliaTel™ controls. The work involved in this upgrade consists of the following:

- Updating to the latest ReliaTel Refrigeration Module (RTRM) to MOD02703
- Installing the TD-5 human interface mounting bracket
- Mounting a TD-5 display to the human interface mounting bracket
- Connecting the TD-5 human interface cable to the RTRM

The TD-5 human interface allows you to view historic alarms, reports, graph specific data, create setpoints, and save graph data to a USB device for further diagnosis. Detailed information on the capabilities of the TD-5 can be found in the *Tracer® TD-5 Display for ReliaTel™ Controller Installation, Operation, and Maintenance* (RT-SVX49*-EN).

A number of setpoints can be changed by using the different potentiometers on each control board. To change the setpoint, use a screw driver to turn the potentiometers to a specific value.

Figure 3. Example of changing potentiometer value on the RTOM

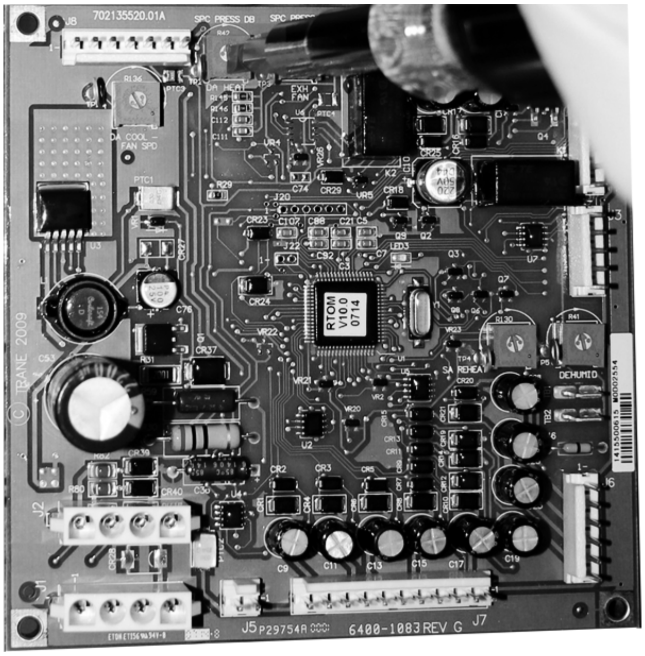

To view all potentiometer setpoint values, put the TD-5 human interface in Read mode by going to Settings > Setup > Display Read Only Mode.

In Writer mode, the TD-5 can override the setpoint values created from the potentiometers, making setpoint configuration easier.

If the TD-5 human interface is disconnected from the ReliaTel Refrigeration Module, the local setpoints from the potentiometer are used. Note that setpoints created from a building automation system (BAS) take precedence over setpoints created by the TD-5.

Additional modules are available as options that have the capability to create setpoints. Table 2 defines these optional modules:

Table 2. Optional setpoints

Option	Model No. Identification	Setpoint	Supported Control Module
17 SEER	Digit 6 = 7	Supply fan adjustment	RTOM MOD02554
Economizer	Digit 14 = C, D, E, F, G, or H	Economizer reference enthalpy Economizer dry bulb enabled	RTEM MOD02667

Note: *This does not mean that older RTOM and RTEM modules are unusable. The TD-5 human interface can still gather data from older RTOM and RTEM boards in addition to having the ability to create setpoints. The latest revisions of the RTOM and RTEM boards require an upgrade to receive the setpoint functionality described in Table 2. The revision list of all ReliaTel boards is located in the Tracer® TD-5 Display for ReliaTel™ Controller Installation, Operation, and Maintenance (RT-SVX49*-EN).*

This manual refers to other pieces of literature at various points. The referenced literature is not included in the upgrade package unless noted. It is available for download from through the online literature repository.

If you need technical assistance during installation, contact Light Commercial Technical Service in Clarksville, TN. Ensure installation is performed by a qualified service technician.

Part Identification

The following tables provides part identification information.

Table 3. Voyager™ light commercial (KIT17429)

Aftermarket Part #	Description	Qty	Factory Part #
MOD02703	Module, ReliaTel™ refrig dual circuit cool/hp	1	X13650867170
CNT07131	TD-5 display with Modbus, USB host support	1	X13760344010
BRK04416	Bracket, human interface mounting	1	438577210100
BRK04519	Bracket, mounting bracket	1	438577220100
SCR00909	Screw, Phillips panhead 0.75-in. thread rolling zinc plate 6-32	2	X25330033130
SCR01623	Screw, 10-16 UNC x 1/2	3	X25240209010
SCR02375	Screw, brass Phillips panhead 8 mm machine, M4-8	4	X25020715010
IRT00017	Stop bumper, 0.486 OD x 0.81 LG	3	X20070029010
	Installation documentation	1	

Table 3. Voyager™ light commercial (KIT17429) (continued)

Aftermarket Part #	Description	Qty	Factory Part #
Optional Parts			
MOD02554	Module, ReliaTel options, RTOM (to create supply fan adjustment setpoint)	1	X13650868090
MOD02667	Module, ReliaTel economizer logic, RTEM, ReliaTel (to create economizer ref enthalpy and economizer dry bulb enabled setpoints)	1	X13651513030

Table 4. Precedent™ (KIT17430)

Aftermarket Part #	Description	Qty	Factory Part #
MOD02703	Module, ReliaTel™ refrig dual circuit cool/hp	1	X13650867190
CNT07131	TD-5 display with Modbus, USB host support	1	X13750344010
BRK04546	TD-5 mounting bracket	1	507115960001
SCR02375	Screw, brass Phillips panhead 8 mm machine, M4-8	4	X25020715010
SCR01623	Screw, 10-16 UNC x 1/2	3	X25240209010
IRT00017	Stop bumper, 0.486 OD x 0.81 LG	3	X20070029010
	Installation documentation	1	
Optional Parts			
MOD02554	Module, ReliaTel options, RTOM (to create supply fan adjustment setpoint)	1	X13650868090
MOD02667	Module, ReliaTel Economizer Logic, RTEM, ReliaTel (to create economizer ref enthalpy and economizer dry bulb enabled setpoints)	1	X13651513030

Table 5. Precedent™ F cabinets

4366-8721-0110	Human Interface High Voltage Door
4366-8638-0110	Human Interface Bracket

Tools List

- Cordless drill
  - 1/8-inch drill bit
  - Phillips driver bit (#2/standard)
  - 5/16-inch hex nut driver bit
- Phillips screwdriver
- Sharpie magic marker
- Zip tie

Voyager™ Light Commercial

⚠WARNING

Hazardous Voltage w/Capacitors!

Failure to disconnect power and discharge capacitors before servicing could result in death or serious injury. Disconnect all electric power, including remote disconnects and discharge all motor start/run capacitors before servicing. Follow proper lockout/ tagout procedures to ensure the power cannot be inadvertently energized. For variable frequency drives or other energy storing components provided by Trane or others, refer to the appropriate manufacturer's literature for allowable waiting periods for discharge of capacitors. Verify with a CAT III or IV voltmeter rated per NFPA 70E that all capacitors have discharged.

1. Turn off the main power disconnect to the unit and then follow the correct lockout/tagout safety procedures to ensure that main power to the machine cannot be inadvertently restored.
2. Open the control cabinet door panel to locate the RTRM board.
    - For standard panels, remove the two screws at the bottom of the control door panel.
    - Depending on the model, you may need to remove the high voltage sheet metal that is attached by recessed screws.

Figure 4. Voyager™ light commercial - RTRM board

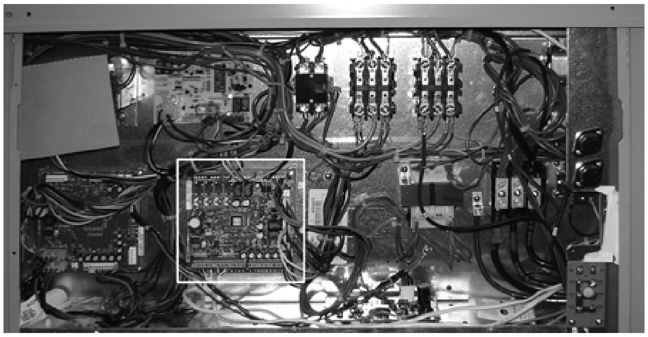

3. Replace the RTRM as follows:
    a. Detach the cables from the RTRM board that go to a thermostat and sensors.
    b. Once all cables/wires are detached, remove the existing RTRM board from the back of the cabinet and attach the newer RTRM board.
    c. Reconnect all cables/wires that were removed from the existing module to the new module.

   To view detailed information on each connection of the RTRM board, refer to the *ReliaTel™ Microprocessor Controls Service and Diagnostics Support* (RT-SVD03*-EN).

4. Mount the TD-5 human interface bracket as follows:
    a. Pre-drill holes for the TD-5 human interface mounting bracket (BRK04519) below the control compartment. Voyager™ Light Commercial models manufactured after January 2014 already have pre-drilled holes for the TD-5 human interface mounting bracket. If the model was manufactured before January 2014, pre-drilled holes are required.
    b. Place the TD-5 human interface mounting bracket BRK04519 directly below the control compartment against the inside of the unit. Use the TD-5 mounting bracket BRK04519 as a template to mark the holes of the bracket.
    c. Before drilling the holes, ensure that nothing will be damaged on the other side of the sheet metal. Then pre-drill the marked holes, using a 1/8-inch drill bit.
    d. Fasten the TD-5 mounting bracket, using a 5/16-inch nut driver and the 10-16 UNC x 1/2-inch screws.
    e. Fasten the stop bumpers (IRT00017) around the bottom screw thread.

Figure 5. Installing the TD-5 human interface mounting bracket (BRK04519)

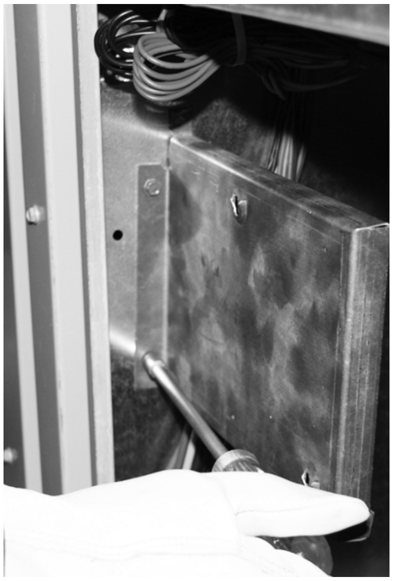

5. Mount the TD-5 human interface (CNT07131) to bracket BRK04416, as follows:
    a. The notches on bracket BRK04416 must be located at the top and bottom of the TD-5.
    b. Use a Phillips screw driver and 4 of the 4M 8 mm screws to fasten the TD-5 human interface onto BRK04416.

Figure 6. Mounting the TD-5 human interface on bracket (BRK04416)

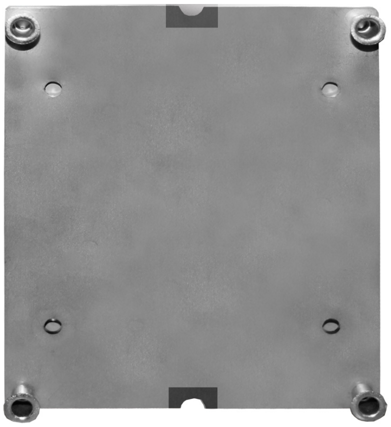

6. Place the TD-5 human interface and BRK04416 onto the TD-5 mounting bracket BRK04519, using the TD-5 mounting bracket eyelets. At any time, the TD-5 human interface can be held for navigational purposes. Two optional screws are included to fasten the two mounting brackets.

Figure 7. Mount the TD-5 human interface on the eyelet bracket (BRK04519)

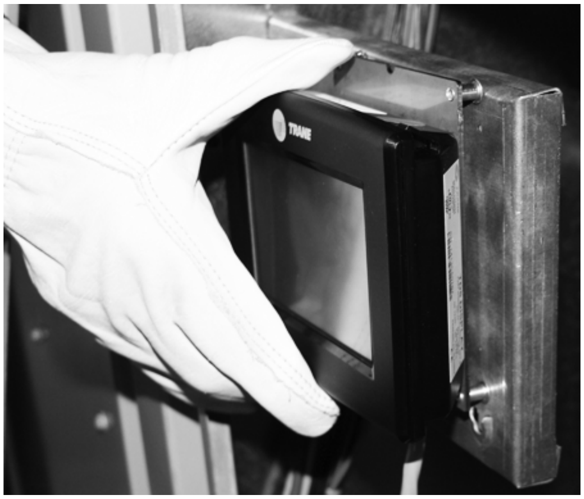

7. Run the TD-5 cord through the control compartment base floor hole.
8. Insert the TD-5 cord into the J10 connection on the RTRM board, ensuring that the cord is not pulled tight against any sheet metal edges that could cause damage to the cord.

Figure 8. TD-5 human interface schematic (2313-1548)

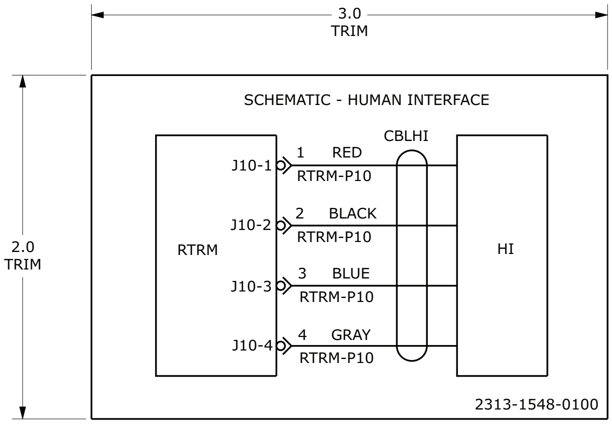

9. Optional: If the RTOM board was purchased, which allows the ability to create the Supply Fan Adjustment setpoint, remove the older RTOM board and replace it with the newer RTOM board as follows:
   a. Ensure that the newer RTOM board's local potentiometer values are identical to the replaced RTOM board.
   b. Once all cables/wires are detached, remove the existing RTOM board from the back of the cabinet and attach the newer RTOM board.
   c. Reconnect all cables/wires that were removed from the existing module to the new module.

   To view detailed information on each connection of the RTOM board, refer to the *ReliaTel™ Microprocessor Controls Service and Diagnostics Support* (RT-SVD03*-EN).

Figure 9. RTOM Board

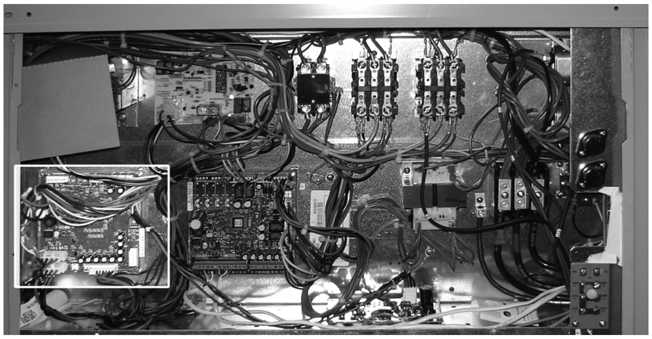

10. Optional: If the RTEM board was purchased, which allows the ability to create the economizer reference enthalpy and economizer dry bulb enabled setpoint, remove the RTEM board and replace it with the newer RTEM board as follows:
    a. Ensure the newer RTEM board's local potentiometer values are identical to the replaced RTEM board.
    b. Once all cables are detached, remove the existing RTEM from the unit and attach the newer RTEM board.

   c. Reconnect all cables/wires that were removed from the existing module to the new module.

   To view detailed information on each connection of the RTEM board, refer to the *ReliaTel™ Microprocessor Controls Service and Diagnostics Support* (RT-SVD03*-EN).

11. Turn on the unit by turning the disconnect to the on position.
12. To start the unit, press the **Auto** button in the upper right hand corner of the TD-5 human interface.

Precedent™ Unit

⚠WARNING

Hazardous Voltage w/Capacitors!

Failure to disconnect power and discharge capacitors before servicing could result in death or serious injury. Disconnect all electric power, including remote disconnects and discharge all motor start/run capacitors before servicing. Follow proper lockout/ tagout procedures to ensure the power cannot be inadvertently energized. For variable frequency drives or other energy storing components provided by Trane or others, refer to the appropriate manufacturer's literature for allowable waiting periods for discharge of capacitors. Verify with a CAT III or IV voltmeter rated per NFPA 70E that all capacitors have discharged.

1. Turn off the main power disconnect to the unit and then follow the correct lockout/tagout safety procedures to ensure that main power to the machine cannot be inadvertently restored.
2. Open the control cabinet door panel to locate the RTRM board.
    - For standard panels, remove the two screws at the bottom of the control door panel.

Figure 10. Precedent™ E cabinet - RTRM board

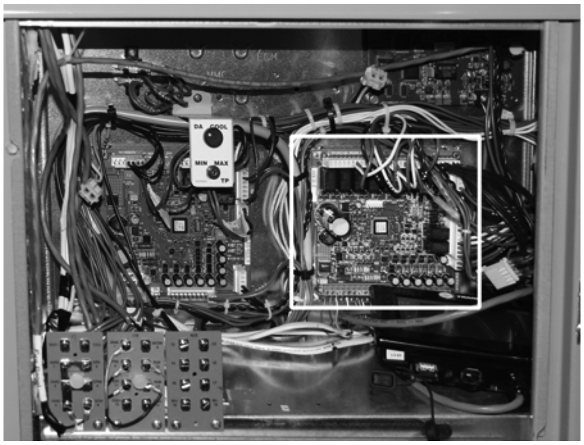

Figure 11. Precedent™ B cabinet - RTRM board

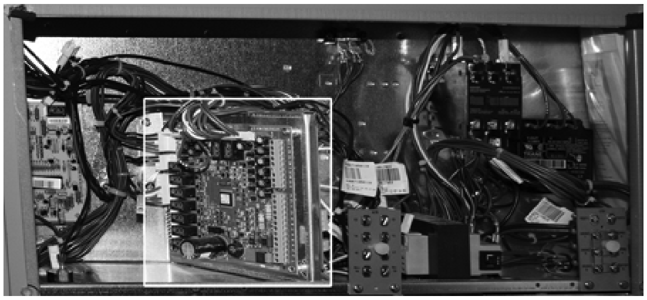

3. Replace the RTRM as follows:
    a. Detach the cables from the RTRM board that go to a thermostat and sensors.
    b. Once all cables are detached, remove the existing RTRM board from the back of the cabinet and attach the new RTRM board.
    c. Reconnect all cables/wires that were removed from the existing module to the new module.

    To view detailed information on each connection of the RTRM board can be viewed in the *ReliaTel™ Microprocessor Controls Service and Diagnostics Support* (RT-SVD03*-EN).

    d. Insert the TD-5 cord into the J10 connection on the RTRM board.
    e. Place the TD-5 on top of the unit while mounting the bracket.

Figure 12. TD-5 human interface schematic (2313-1548)

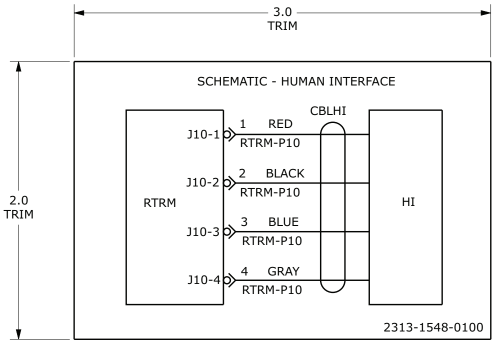

4. Optional: If the RTOM board was purchased, which allows the ability to create the supply fan adjustment setpoint, remove the older RTOM board and replace it with the newer RTOM board as follows:

    The RTOM board will be located in either the indoor fan section or the control panel compartment depending on the Precedent™ model.

Figure 13. Precedent™ E cabinet - RTOM board

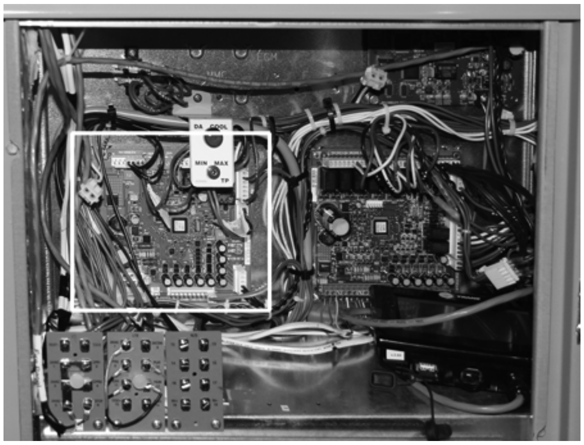

Figure 14. Precedent™ location of RTRM/RTOM for F cabinet

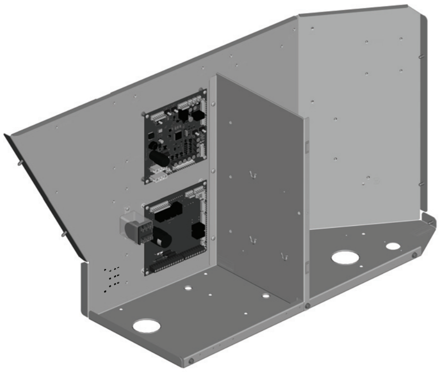

Figure 15. Precedent™ B cabinet - RTOM board

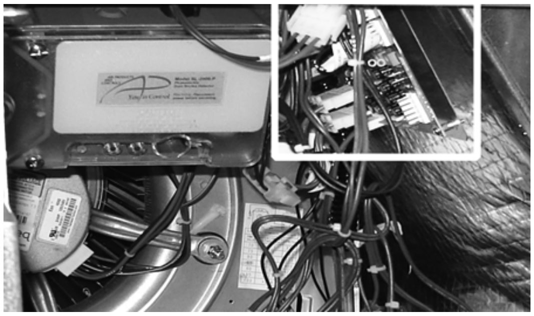

a. Ensure the newer RTOM board's local potentiometer values are identical to the replaced RTOM board.

b. Once all cables/wires are detached, remove the existing RTOM board from the back of the cabinet and attach the newer RTOM board.

c. Reconnect all cables/wires that were removed from the existing module to the new module.

To view detailed information on each connection of the RTOM board can be viewed in the *ReliaTel™ Microprocessor Controls Service and Diagnostics Support* (RT-SVD03*-EN).

5. Mount the TD-5 human interface bracket as follows:

Note: *For T/YSC033-063G and D/W*C036-048H units, remove current high voltage door and replace with human interface high voltage door. Mount human interface bracket to door and mount human interface to bracket.*

a. Place the TD-5 human interface mounting bracket in the front of the control compartment. Use the TD-5 human interface mounting bracket as a template to mark the holes. For units that have the gas/heat option and a voltage of either 450/60/3 or 575/60/3 an additional sensor and transformer may be attached in this area.

b. Before drilling the holes, ensure that nothing will be damaged on the other side of the sheet metal. Then pre-drill the marked holes with a 1/8-inch drill bit.

c. Fasten the TD-5 mounting bracket, using a 5/16-inch nut driver and the 10-16 UNC x ½-inch screws.

d. Fasten the stop bumpers (IRT00017) around the bottom screw thread.

6. Mount the TD-5 display (CNT07131) to the TD-5 human interface mounting bracket.

This bracket gives the user the ability to hold the TD-5 human interface in their hand while diagnosing issues.

a. Fasten 3 of the 4M 8 mm screws into the top two holes and bottom left hand hole of the TD-5 human interface making sure 1 mm is left to place the TD-5 human interface into the recessed screw holes. Loctite can be optionally used when fastening the screws.

b. The TD-5 can be permanently fastened by installing the 4th screw in the bottom right hand hole once the TD-5 human interface is mounted.

Figure 16. Precedent™ E cabinet - TD-5 human interface

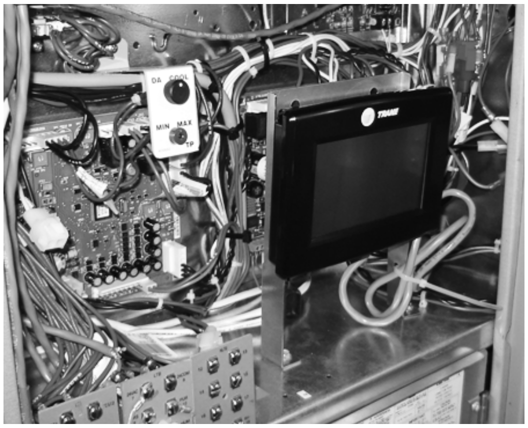

Figure 17. Precedent™ B cabinet - TD-5 human interface

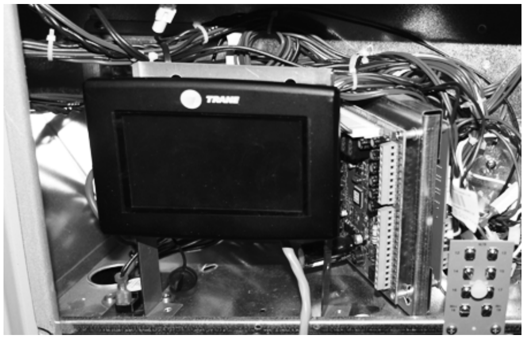

c. Using the plastic zip tie, (fastened to the hole in the right hand leg of the TD-5 bracket) bundle the TD-5 cord to ensure it is isolated from the other controls. Do not pull the cord tight against any sheet metal edges. This could cause damage to the cord.

7. Optional: If the RTEM board was purchased, which allows the ability to create the economizer reference enthalpy and economizer dry bulb enabled setpoint, remove the RTEM board and replace it with the newer RTEM board as follows:
   a. Ensure the newer RTEM board's local potentiometer values are identical to the replaced RTEM board.
   b. Once all cables are attached remove the existing RTEM from the unit and attach the newer RTEM board.
   c. Reconnect all cables/wires that were removed from the existing module to the new module.

   To view detailed information on each connection of the RTEM board, refer to the *ReliaTel™ Microprocessor Controls Service and Diagnostics Support* (RT-SVD03*-EN).

Figure 18. Precedent™ E cabinet - RTEM location

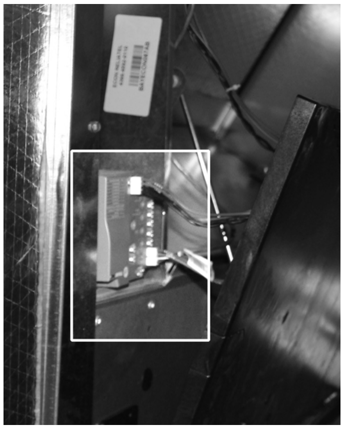

Figure 19. Precedent™ F cabinet - Human interface door

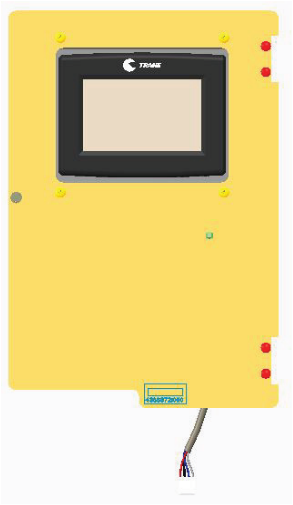

8. Replace current high voltage door with 4366-8721-0110.
9. Install Human Interface onto 4366-8638-0110 bracket.
10. Install Human Interface and bracket onto newly installed high voltage door.
11. Turn on the unit by turning the disconnect to the on position.
12. To start the unit, press the **Auto** button in the upper right hand corner of the TD-5 human interface.

Notes

Trane and American Standard create comfortable, energy efficient indoor environments for commercial and residential applications. For more information, please visit trane.com or americanstandardair.com.

Trane and American Standard have a policy of continuous product and product data improvement and reserve the right to change design and specifications without notice. We are committed to using environmentally conscious print practices.

PART-SVN259A-EN 13 Oct 2023
Supersedes RSP-SVN001E-EN (Apr 2020)

©2023