Installation Instructions

Low Leak Economizer

Precedent™ Packaged Rooftop Units with Symbio™ 700 Controls 3 to 25 Tons

Model Numbers:	Used With:
FIAECON101*	Precedent A cabinet (Digit 39 = A), Downflow
FIAECON102*	Precedent B/C cabinet (Digit 39 = B/C), Downflow
FIAECON103*	Precedent D cabinet (Digit 39 = D), Downflow
FIAECON201*	Precedent A cabinet (Digit 39 = A), Horizontal
FIAECON202*	Precedent B/C cabinet (Digit 39 = B/C), Horizontal
FIAECON203*	Precedent D cabinet (Digit 39 = D), Horizontal

⚠ SAFETY WARNING

Only qualified personnel should install and service the equipment. The installation, starting up, and servicing of heating, ventilating, and air-conditioning equipment can be hazardous and requires specific knowledge and training. Improperly installed, adjusted or altered equipment by an unqualified person could result in death or serious injury. When working on the equipment, observe all precautions in the literature and on the tags, stickers, and labels that are attached to the equipment.

August 2024 **ACC-SVN264F-EN**

Introduction

Read this manual thoroughly before operating or servicing this unit.

Warnings, Cautions, and Notices

Safety advisories appear throughout this manual as required. Your personal safety and the proper operation of this machine depend upon the strict observance of these precautions.

The three types of advisories are defined as follows:

⚠WARNING	Indicates a potentially hazardous situation which, if not avoided, could result in death or serious injury.
⚠CAUTION	Indicates a potentially hazardous situation which, if not avoided, could result in minor or moderate injury. It could also be used to alert against unsafe practices.
NOTICE	Indicates a situation that could result in equipment or property-damage only accidents.

Important Environmental Concerns

Scientific research has shown that certain man-made chemicals can affect the earth's naturally occurring stratospheric ozone layer when released to the atmosphere. In particular, several of the identified chemicals that may affect the ozone layer are refrigerants that contain Chlorine, Fluorine and Carbon (CFCs) and those containing Hydrogen, Chlorine, Fluorine and Carbon (HCFCs). Not all refrigerants containing these compounds have the same potential impact to the environment. Trane advocates the responsible handling of all refrigerants.

Important Responsible Refrigerant Practices

Trane believes that responsible refrigerant practices are important to the environment, our customers, and the air conditioning industry. All technicians who handle refrigerants must be certified according to local rules. For the USA, the Federal Clean Air Act (Section 608) sets forth the requirements for handling, reclaiming, recovering and recycling of certain refrigerants and the equipment that is used in these service procedures. In addition, some states or municipalities may have additional requirements that must also be adhered to for responsible management of refrigerants. Know the applicable laws and follow them.

⚠WARNING

Proper Field Wiring and Grounding Required!

Failure to follow code could result in death or serious injury. All field wiring MUST be performed by qualified personnel. Improperly installed and grounded field wiring poses FIRE and ELECTROCUTION hazards. To avoid these hazards, you MUST follow requirements for field wiring installation and grounding as described in NEC and your local/state/national electrical codes.

⚠WARNING

Personal Protective Equipment (PPE) Required!

Failure to wear proper PPE for the job being undertaken could result in death or serious injury. Technicians, in order to protect themselves from potential electrical, mechanical, and chemical hazards, MUST follow precautions in this manual and on the tags, stickers, and labels, as well as the instructions below:

- **Before installing/servicing this unit, technicians MUST put on all PPE required for the work being undertaken (Examples; cut resistant gloves/sleeves, butyl gloves, safety glasses, hard hat/bump cap, fall protection, electrical PPE and arc flash clothing). ALWAYS refer to appropriate Safety Data Sheets (SDS) and OSHA guidelines for proper PPE.**
- **When working with or around hazardous chemicals, ALWAYS refer to the appropriate SDS and OSHA/GHS (Global Harmonized System of Classification and Labeling of Chemicals) guidelines for information on allowable personal exposure levels, proper respiratory protection and handling instructions.**
- **If there is a risk of energized electrical contact, arc, or flash, technicians MUST put on all PPE in accordance with OSHA, NFPA 70E, or other country-specific requirements for arc flash protection, PRIOR to servicing the unit. NEVER PERFORM ANY SWITCHING, DISCONNECTING, OR VOLTAGE TESTING WITHOUT PROPER ELECTRICAL PPE AND ARC FLASH CLOTHING. ENSURE ELECTRICAL METERS AND EQUIPMENT ARE PROPERLY RATED FOR INTENDED VOLTAGE.**

⚠WARNING

Follow EHS Policies!

Failure to follow instructions below could result in death or serious injury.

- **All Trane personnel must follow the company's Environmental, Health and Safety (EHS) policies when performing work such as hot work, electrical, fall protection, lockout/tagout, refrigerant handling, etc. Where local regulations are more stringent than these policies, those regulations supersede these policies.**
- **Non-Trane personnel should always follow local regulations.**

⚠WARNING

R-454B Flammable A2L Refrigerant!

Failure to use proper equipment or components as described below could result in equipment failure, and possibly fire, which could result in death, serious injury, or equipment damage.
The equipment described in this manual uses R-454B refrigerant which is flammable (A2L). Use ONLY R-454B rated service equipment and components. For specific handling concerns with R-454B, contact your local representative.

Copyright

Trademarks

Revision History

- Used with information updated to meet A2L standards.
- Updated the Model numbers.
- Updated General Information – FIAECON101/02* chapter.
- The following are the updates in Field-Installed Assembly and Installation FIAECON101*/02* chapter:
  - Installation Instructions for FIAECON101*/02*.
  - Added the Factory-Installed Low Leak Economizer setup.
  - Removed the Power Exhaust section.
- Updated the Installation section in Installation– FIAECON103* chapter.
- Added Field Installed Assembly and Installation – FIAECON201*/02* chapter.
- Updated Installation section in Installation– FIAECON203* chapter.
- Added Minimum Position Setting for One Speed Indoor Fan, Minimum Position Setting, Reference Enthalpy Settings, and Dry Bulb Settings sections to Differential Dry Bulb chapter.

Table of Contents

General Information – FIAECON101/02*

This section covers installation of low leak economizers for 3 to 12.5 ton downflow units in the A, B, and C cabinet (model number digit 39 = A, B, and C).

An options board (FIAOPTN002*) must be installed to the unit for the accessory to operate.

Inspection

1. Unpack all components of the kit.
2. Check carefully for shipping damage. If any damage is found, report it immediately, and file a claim against the transportation company.

Parts List

Table 1. Parts list

Qty	Description
1	Low leak economizer
1	Barometric relief mist filter
1	Top filler panel
1	Top hood mist filter
1	Bag parts
1	Two piece hood
16	Self-drilling screws (33 Std. and 14 TEK)
2	Hood triangles
2	Smoke detector grommets
1	Hood base
26	Feet gasketing
1	Barometric relief hood
1	Power exhaust gasket
1	Barometric relief triangle
1	Smoke detector bracket
1	FA hood front support
2	FA hood mist eliminator side retainer
1	FA hood mist eliminator rear block-off
1	FA hood extender top side (FIAECON101*)
1	FA hood extender right side (FIAECON101*)
1	FA hood extender left side (FIAECON101*)
1	Control harness

Field-Installed Assembly and Installation – FIAECON101*/02*

This section covers installation of low leak economizer units not installed in the rooftop unit at the factory.

⚠WARNING

Hazardous Voltage!

Failure to disconnect power before servicing could result in death or serious injury. Disconnect all electric power, including remote disconnects before servicing. Follow proper lockout/tagout procedures to ensure the power can not be inadvertently energized.

1. Remove the existing economizer hood end panel (factory installed) from the unit and discard (see Figure 1, p. 6).

Figure 1. Economizer

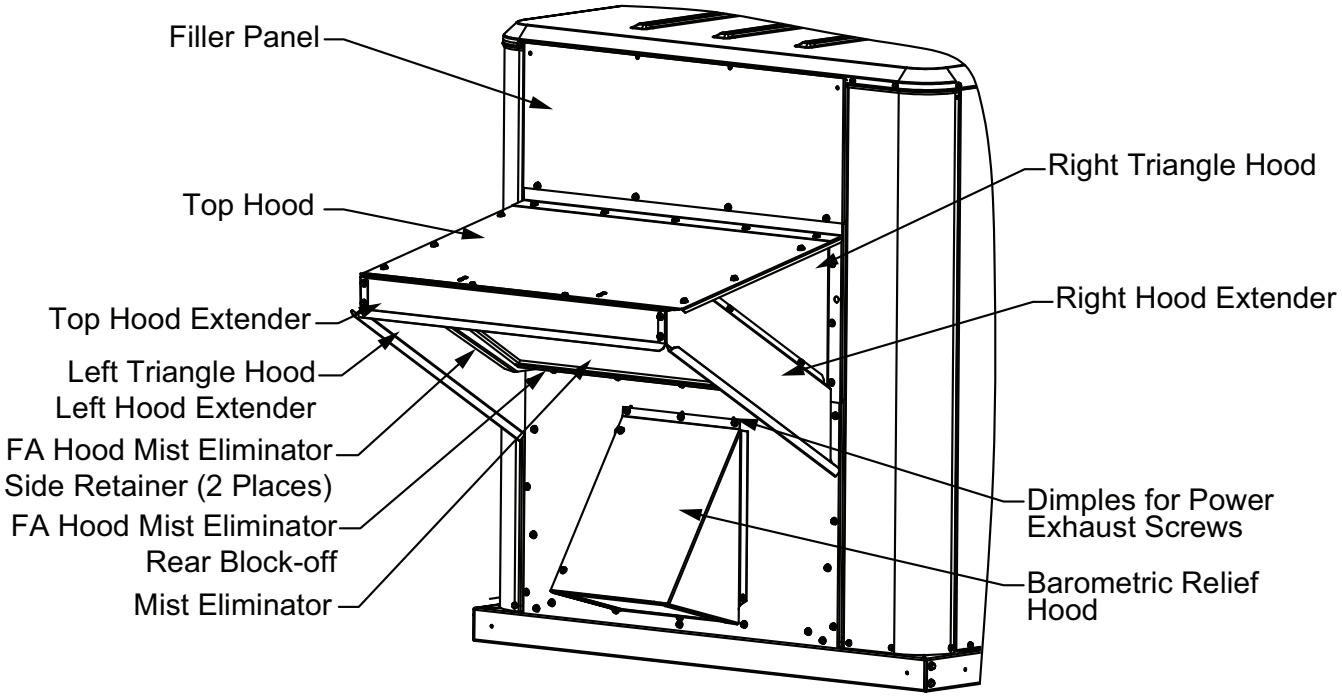

2. Apply 1-inch gasket material to disassembled unit. See Figure 2, p. 7.

Figure 2. Gasket material position

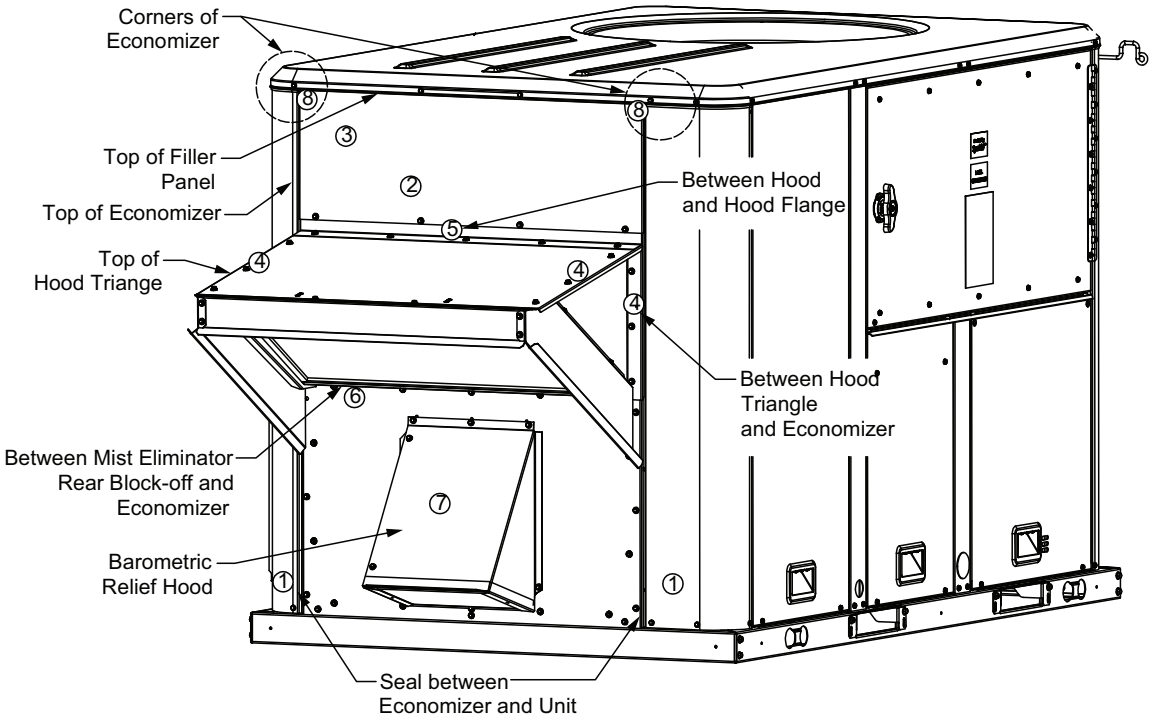

Table 2. Parts list

Item	Description
1	Unit - seal between economizer and unit
2	Top of economizer - seal between economizer and top of unit or between economizer and top filler panel
3	Between top of filler panel and unit only if filler panel is required
4	Hood triangle - seal between hood and hood triangle, economizer and hood triangle
5	Between hood and hood flange
6	Between mist eliminator rear block-off and economizer
7	Around barometric relief hood - seal between barometric relief hood and unit
8	Apply 1-inch gasket in corners to seal area between unit and economizer

3. Remove the hood top from the non-linkage (front) side of the economizer and set aside for Step 7.

   Notes:

   - *If the optional sensors for humidity and temperature monitoring are needed (FIAENTH001* and FIAENTH002*), install them using the instructions (Reference Enthalpy Installation Instructions (ACC-SVN234*-EN) and Comparative Enthalpy Kit Installation Instructions (ACC-SVN235*-EN)) provided in those kits.*
   - *For differential dry bulb installation and wiring follow instructions from "Installation," p. 27.*
   - *If a smoke detector is to be installed follow the instructions from "Smoke Detector," p. 10.*

4. Install economizer in the unit, shift left, and install single screw into alignment holes.

Note: *Screw will be removed later.*

5. Use the self-drilling screws through remaining large holes around perimeter of economizer.

Figure 3. Pictorial layout of the previous steps

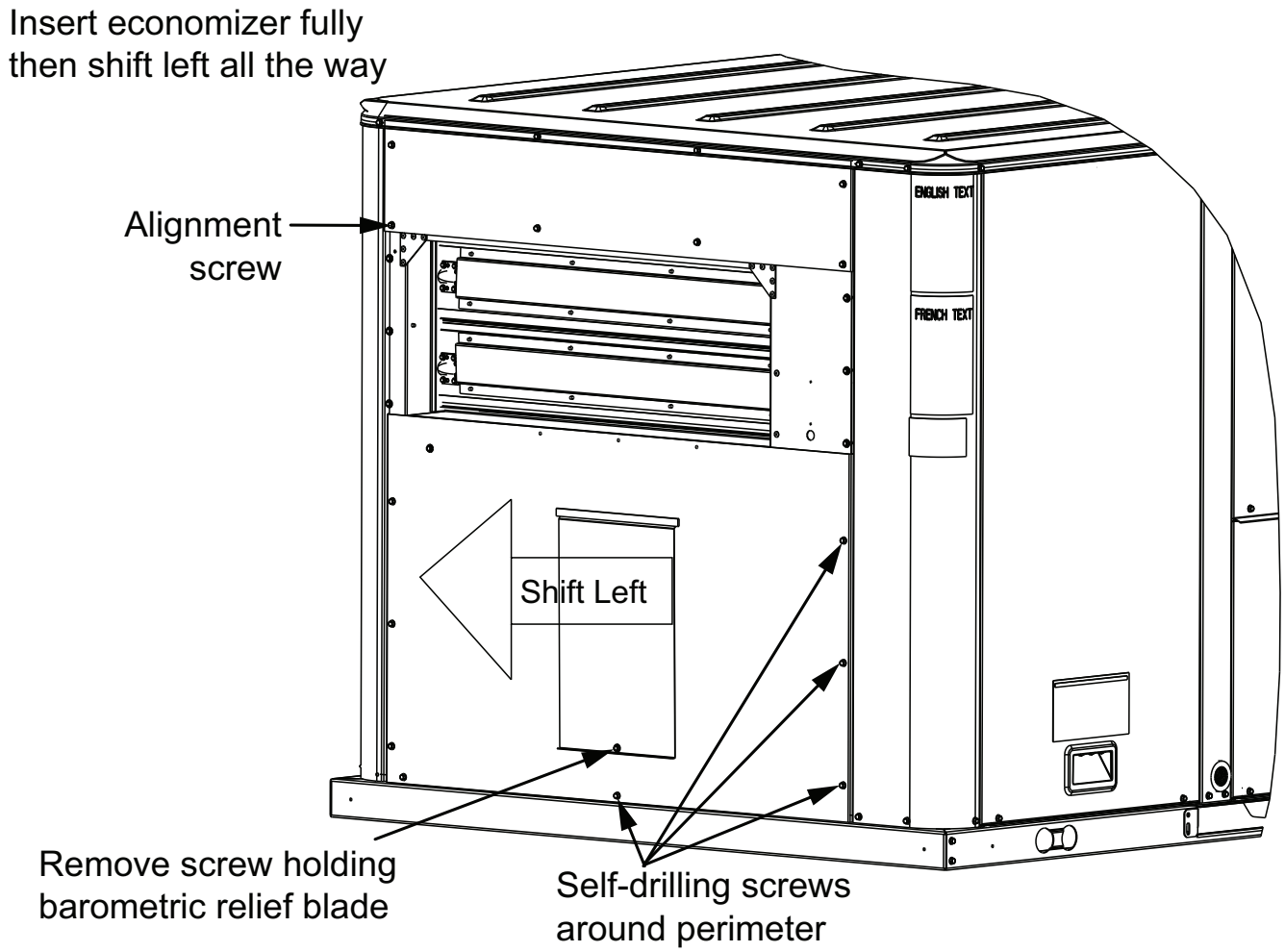

6. Remove the alignment screw.
7. Assemble flange to hood top (removed in Step 3), then to hood triangles and attach to economizer. See Figure 1, p. 6.
8. Install mist eliminator rear block-off between the two hood triangles
9. For FIAECON101, install three hood extenders on Top, left and right side of the hood. See Figure 1, p. 6.
10. Install mist eliminator into hood assembly and secure with filter clips provided on hood top.
11. Install filler panel above the hood if necessary (does not apply to all models).
12. Remove shipping screw from aluminum barometric relief blade.
13. If a power exhaust will be installed then instructions shall be followed from *Power Exhaust Kit -Standard and Low Leak Economizers 3 to 25 Tons Installation Instructions* (ACC-SVN236*-EN).
14. Assemble and install barometric relief hood.
15. Skip this step if power exhaust is already installed.
16. Using field supplied silicone, apply sealant seal any gap between unit and economizer.

Factory-Installed Low Leak Economizer Setup

This section covers installation of low leak economizer units that were installed in the rooftop unit at the factory.

1. Remove the horizontal return opening panel and/or filter access panel and find the economizer parts. See Figure 4, p. 9.
2. Remove the filler panel and hood from the unit. See Figure 5, p. 10.
3. If the optional sensors for humidity and temperature monitoring are needed (FIAENTH001* and FIAENTH002*), install them using the instructions provided in those kits. For differential dry bulb installation and wiring follow instructions from"Installation," p. 27.
4. Follow the Step 2 and Step 7 through Step 16 from "Field-Installed Assembly and Installation – FIAECON101*/02*," p. 6.

Figure 4. Factory-supplied economizer components

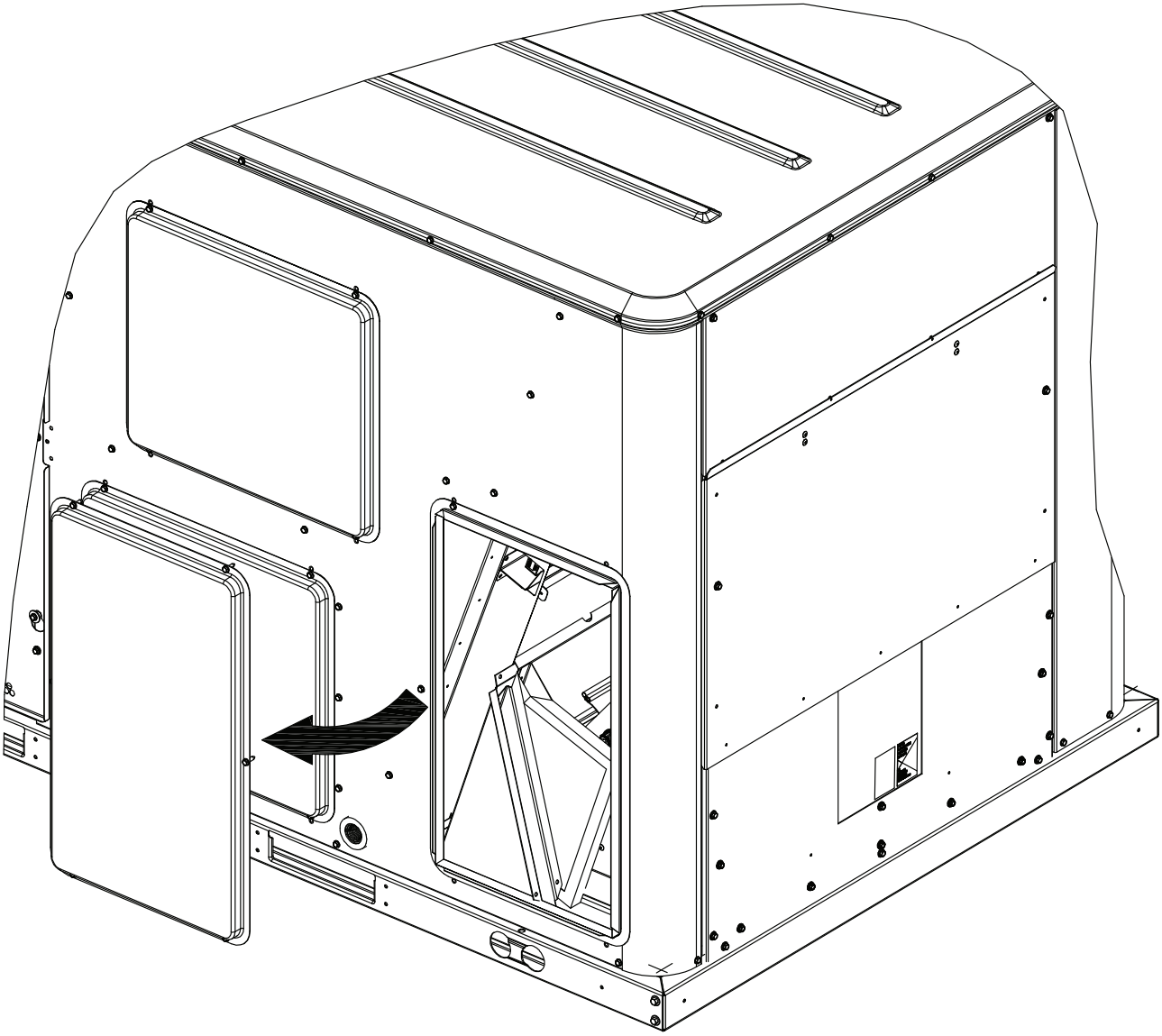

Figure 5. Factory-installed economizer

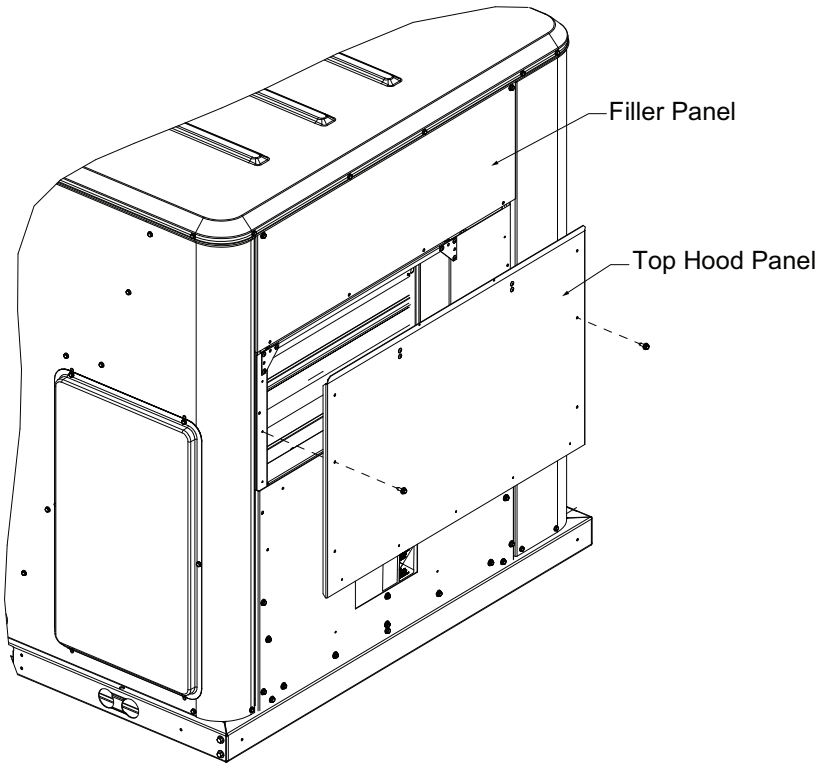

Smoke Detector

1. If a smoke detector is installed, remove the copper or aluminum pipe, and flexible tubing from above return air opening, and all associated brackets.

Note: *Grommets are in the economizer parts bag.*

2. Attach retaining bracket to pipe. See Figure 6, p. 10 for the large economizer, drill a 1/8-inch hole drilled in pipe on opposite side of existing breathing holes.

Notes:

- *Retaining bracket in the economizer parts bag.*
- *In Figure 6, p. 10, intake holes must be down for unit to work.*

Figure 6. Tubing

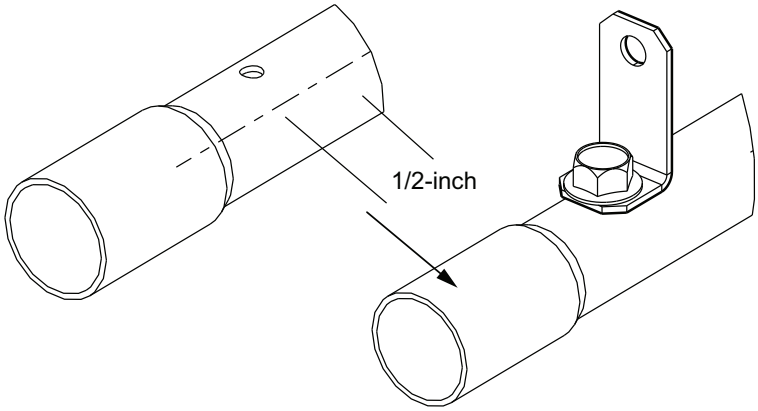

3. Insert smoke detector pipe into hole of economizer and into back bracket inside economizer. See Figure 7, p. 11.
4. Using a self-drilling screw, attach retaining bracket to economizer. See Figure 7, p. 11.
5. Shorten the flexible tubing and connect from the copper tubing to the smoke detector unit.

Important: *Verify holes in copper tube are facing down. Unit will not sense smoke if holes are not facing down.*

Figure 7. Smoke detector

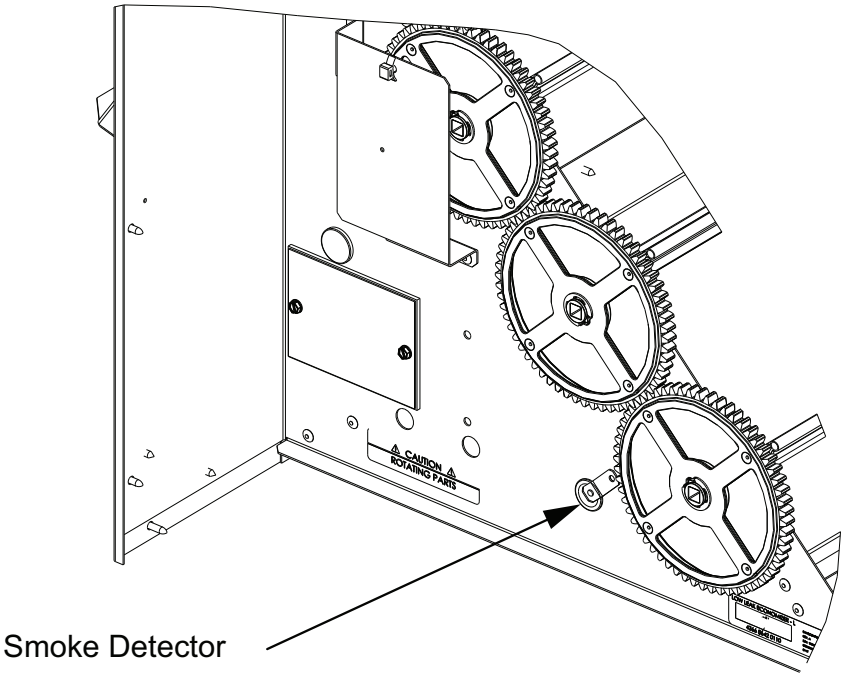

Economizer Wiring

Once economizer has been installed, connect actuator harness into J11 on fresh air module. See main unit schematic Sheet 6 for balance of circuit. Refer to Figure 8, p. 11 for fresh air module access.

Figure 8. Return enclosure access

Installation – FIAECON103*

This section covers installation of low leak economizers for 12.5 to 25 ton downflow units in the D cabinet (model number digit 39 = D).

Parts List

NOTICE

Corrosion Damage!

Failure to use recommended caulking/sealant could cause corrosion related failures to refrigerant components.

Figure 9. Low leak economizer (downflow)

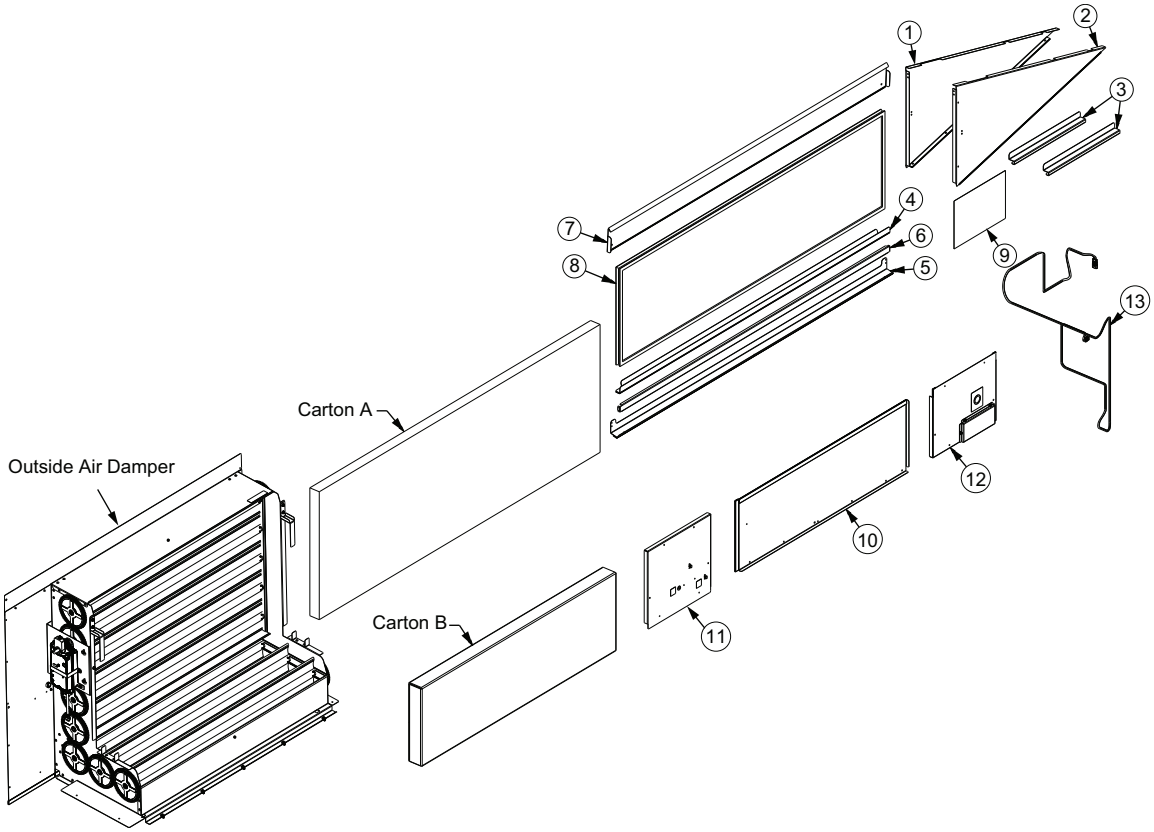

Table 3. Parts list

Item	Description	Qty
-	Outside air damper assembly	1
Hood parts (Carton A):		
1	Right hood panel	1
2	Left hood panel	1
3	Filter side angle bracket	2
4	Filter rear angle bracket	1
5	Hood front support bracket	1

Table 3. Parts list (continued)

Item	Description	Qty
6	Filter top support bracket	1
7	Economizer diverter panel	1
8	Filter	1
9	Hardware bag: • 52 Type AB sheet metal screws with sealing washer (#10-16 x 5/8 in.) • Identification label • Installation instructions	1
Field only parts (Carton B):[(a)]		
10	Outside air block-off	1
11	Return air block-off, back subassembly	1
12	Return air block-off, front subassembly	1
13	Controls harness	1
Field supplied part:		
-	Tube sealant - Trane recommends Sikaflex 221 (SEL00439)	-

(a) These parts are already installed in the factory installed option.

Installation

⚠WARNING

Heavy Object!

Failure to follow instructions below could result in severe injury and equipment damage. Economizer weighs over 50 pounds and should be installed by two people.

⚠WARNING

Hazardous Voltage w/Capacitors!

Failure to disconnect power and discharge capacitors before servicing could result in death or serious injury. Disconnect all electric power, including remote disconnects and discharge all motor start/run capacitors before servicing. Follow proper lockout/tagout procedures to ensure the power cannot be inadvertently energized. Verify with a CAT III or IV voltmeter rated per NFPA 70E that all capacitors have discharged.

1. Remove the unit end panel and both (front and rear) fresh air access panels from the unit and set them aside.

Figure 10. Panel removal

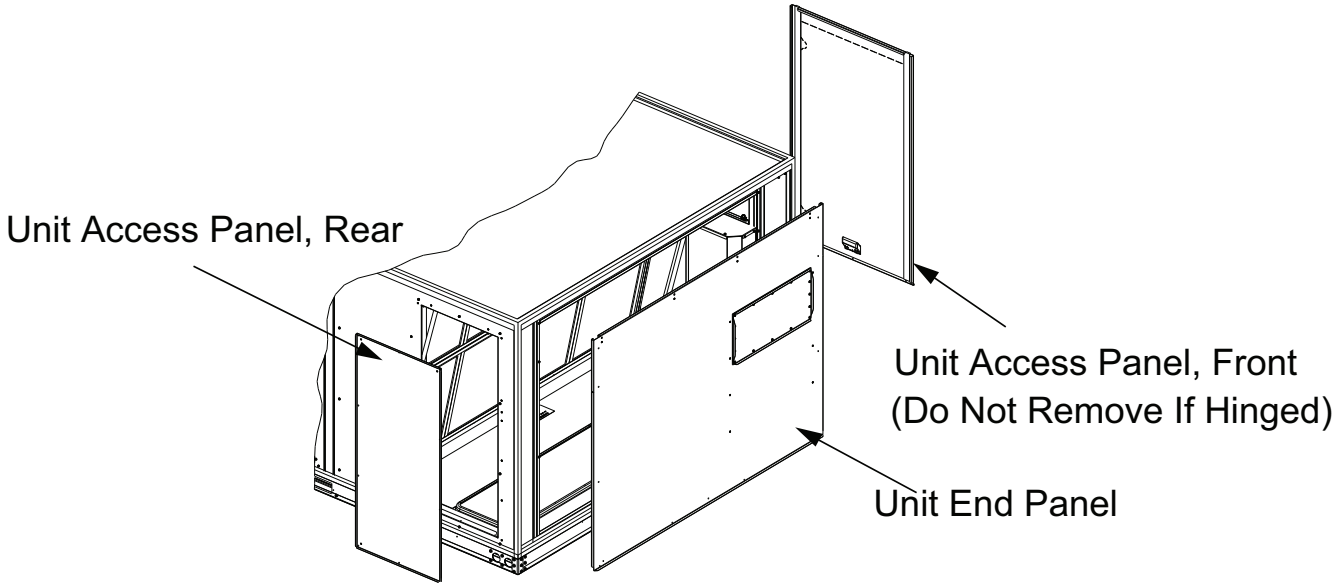

2. For a factory installed low leak economizer, skip directly to Step 10 of the installation instructions.
3. Remove both cartons containing ship with parts from the outdoor air damper assembly and discard any shipping brackets.

Figure 11. Upacked damper assembly with carton A and B

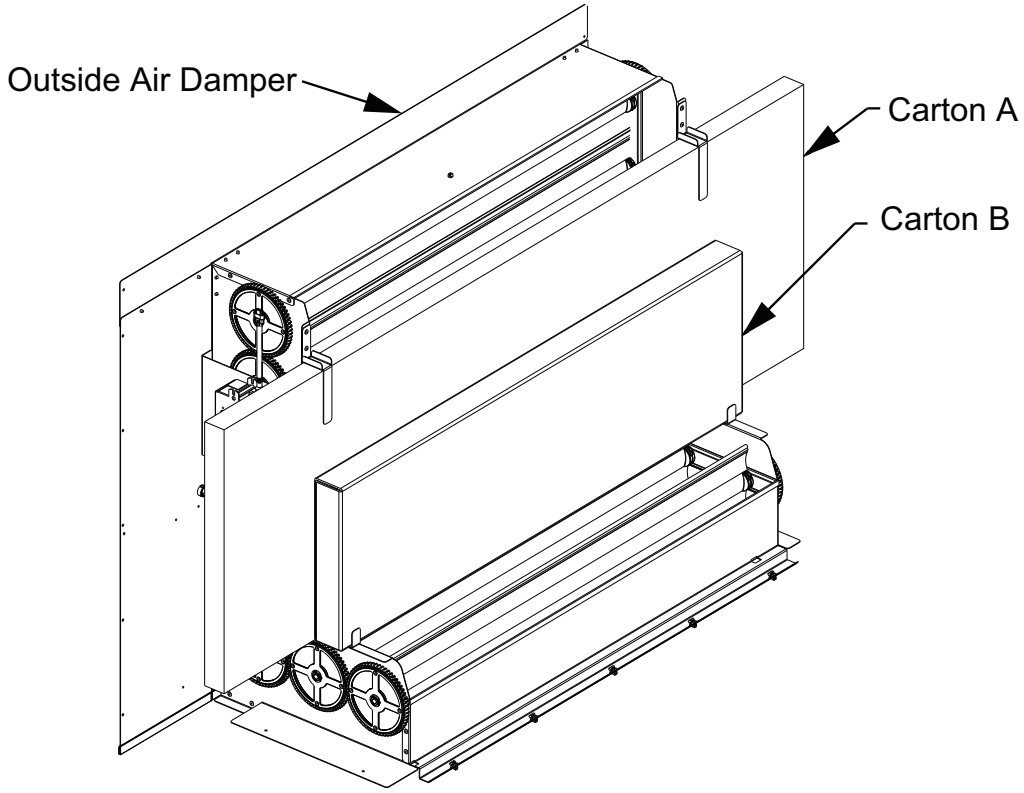

4. Remove contents of carton B and install the return air front block-off as shown in Figure 12, p. 15 with #10-16 x 5/8 in. screws with sealing washer. Screws can be found in the hardware bag from carton A.

Figure 12. Return air front block-off installation

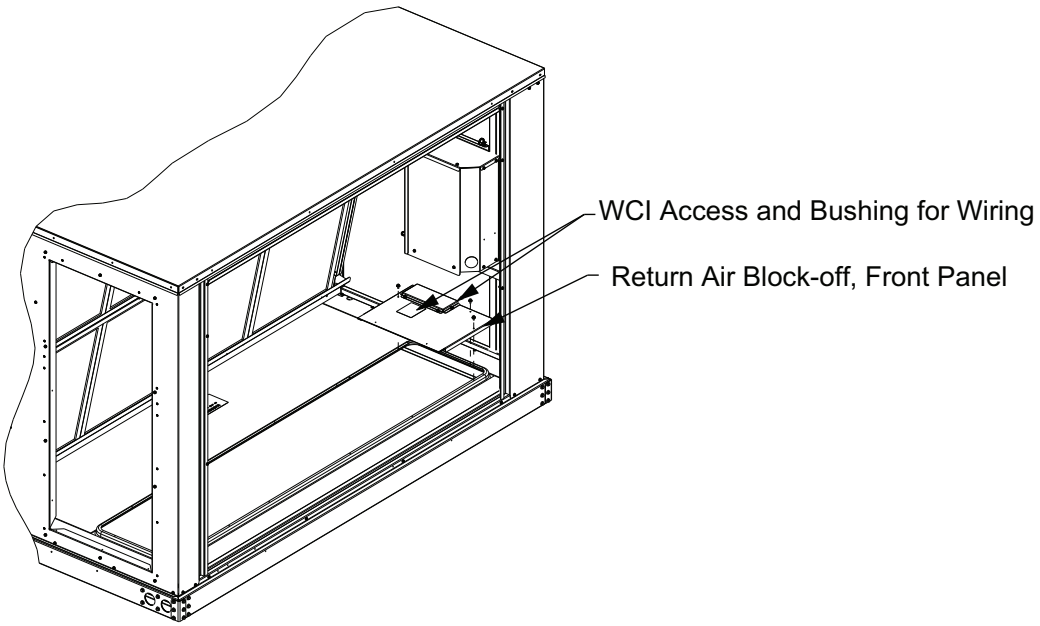

5. Install the outdoor air damper assembly as shown in Figure 13, p. 15 to the end of the unit and on the return air duct flange.

Figure 13. Outdoor air damper assembly installation

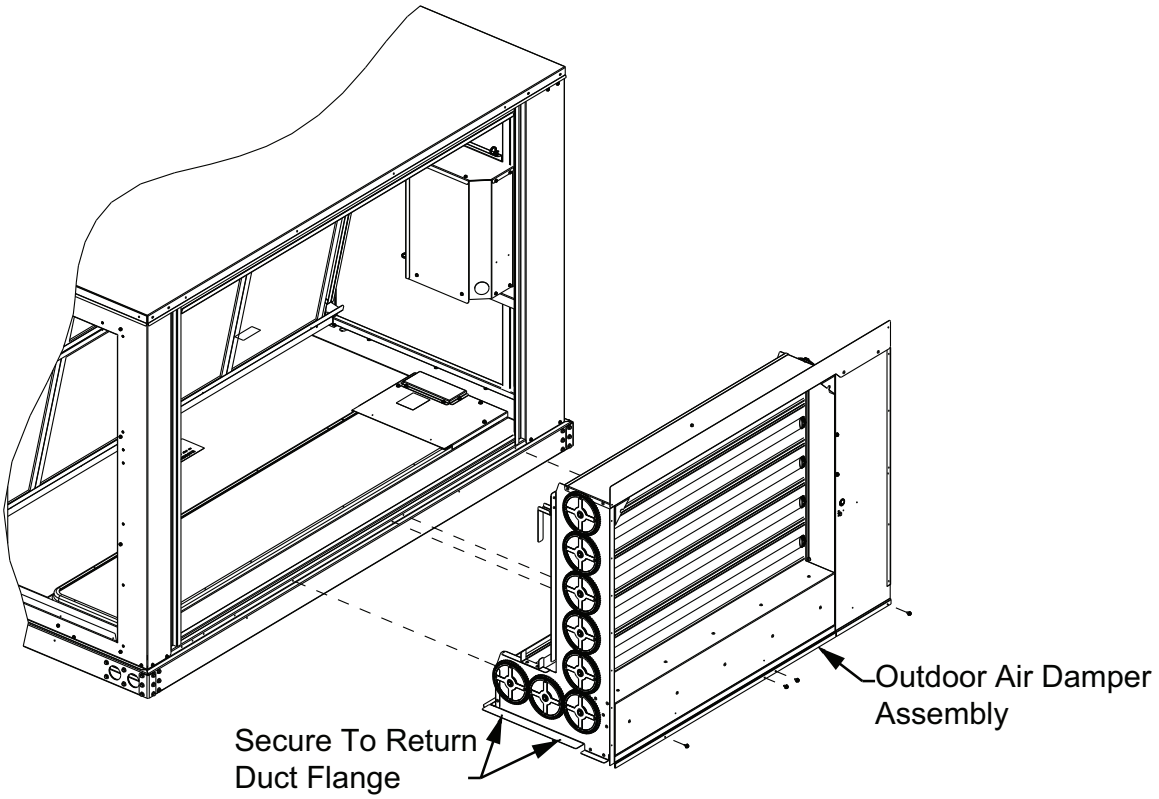

6. Refer to the *Barometric Relief Damper Packaged Rooftop Units 12.5 to 25 Tons Installation Instructions* (ACC-SVN286*-EN) and install the barometric block-off panels and gasket.

Figure 14. Barometric relief with LLE installation

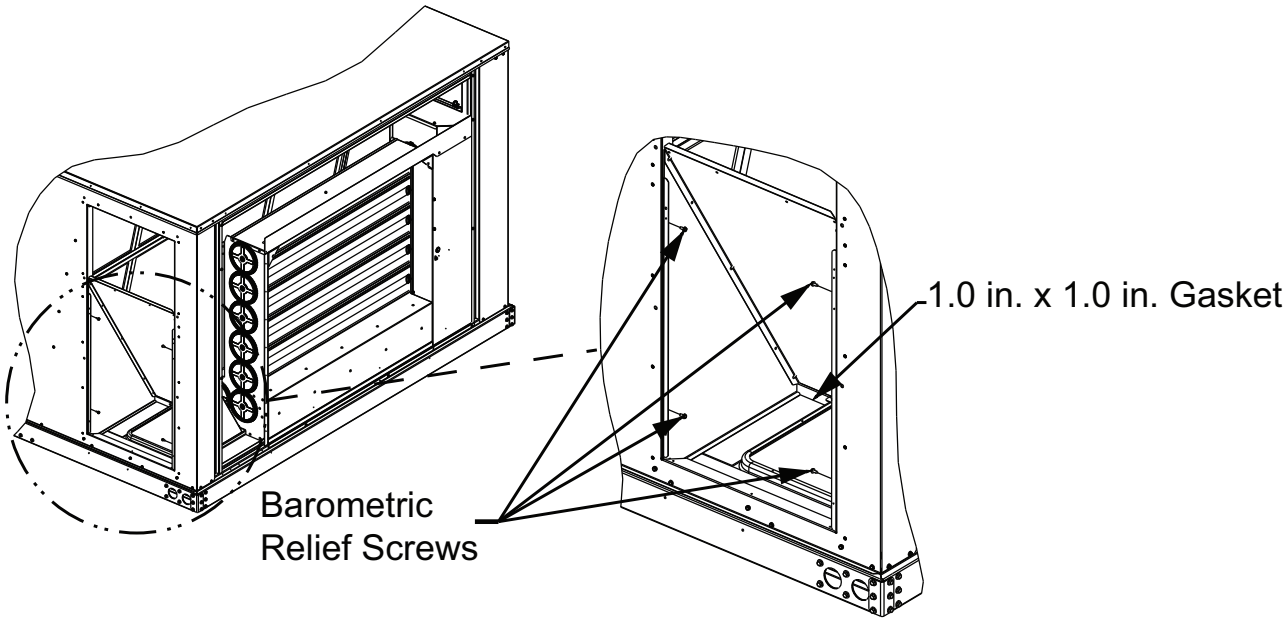

7. Install the outside air block-off panel on the left side of the outdoor air damper assembly as shown in Figure 15, p. 16.

Figure 15. Outdoor air block-off panel installation

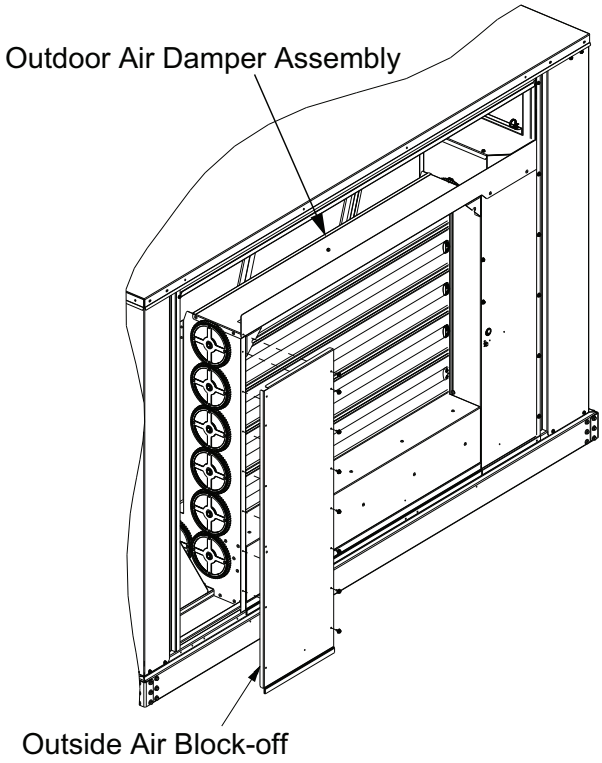

8. Secure outdoor air damper assembly to the return air front block-off that was previously installed in Step 4.

Figure 16. Damper assembly attachment to block-off

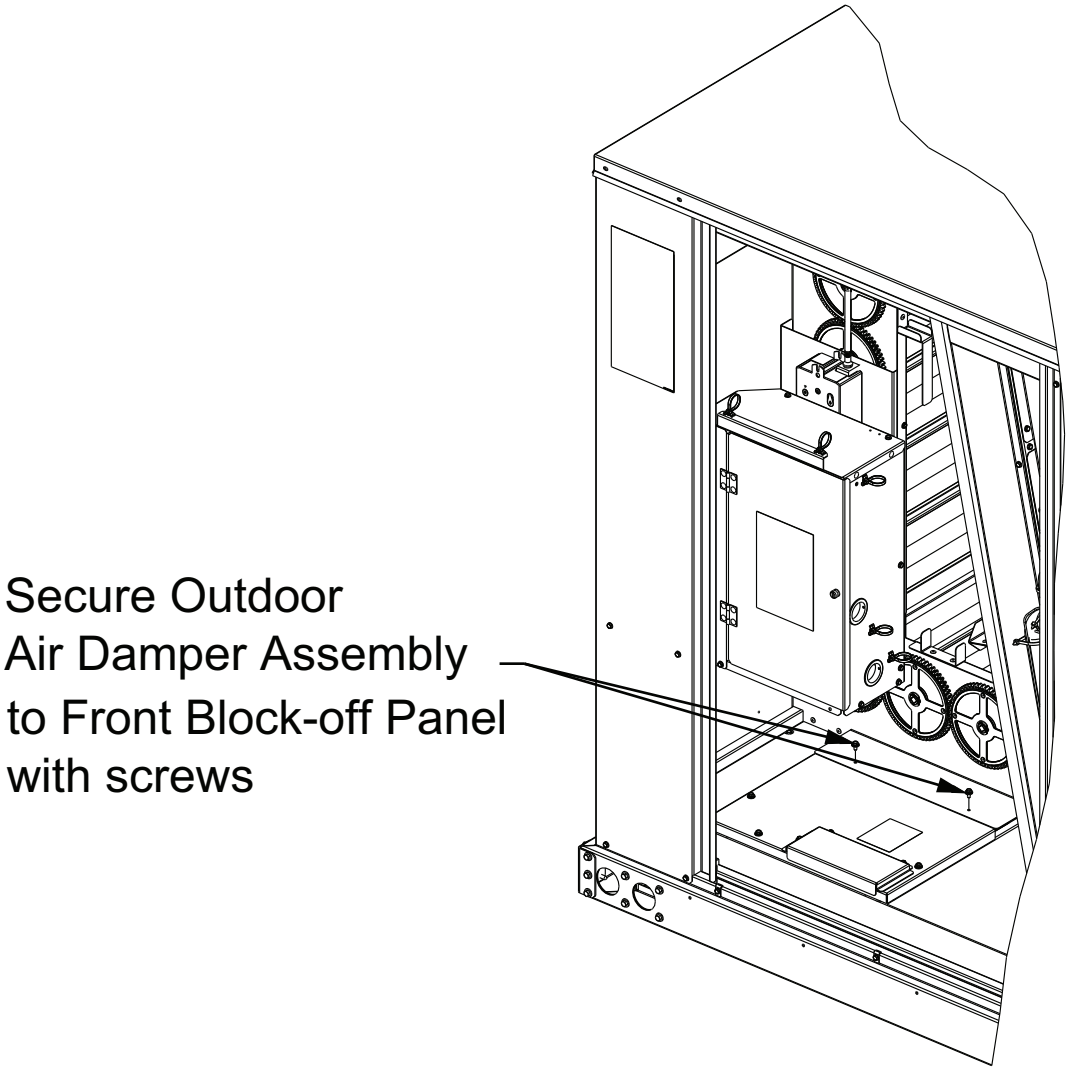

9. Route the controls harness from the actuator to the fresh air options module located in the return enclosure using the factory installed wire ties. Connect harness P11 to fresh air options module J11. Confirm that the harness has a secure connection. See Figure 17, p. 18.

Note: *Wire ties have a releasable feature to allow them to be opened and closed.*

Figure 17. Actuator wire harness routing

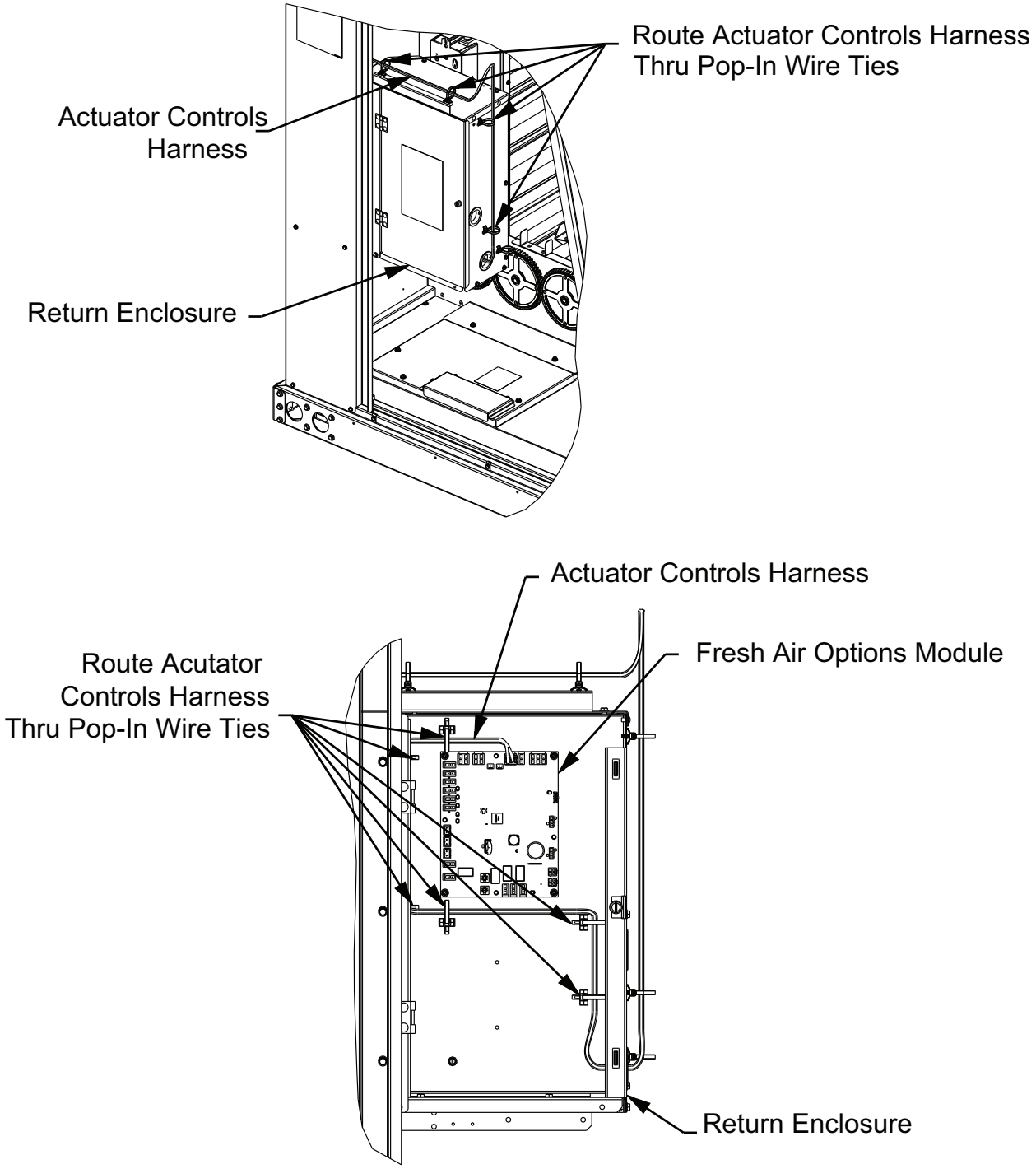

For factory-installed, start with below steps:

10. To allow for the barometric relief option installation, remove the return air rear block-off. Install the barometric relief option per the *Barometric Relief Damper Packaged Rooftop Units 12.5 to 25 Tons Installation Instructions* (ACC-SVN286*-EN).

Figure 18. Return air rear block-off removal

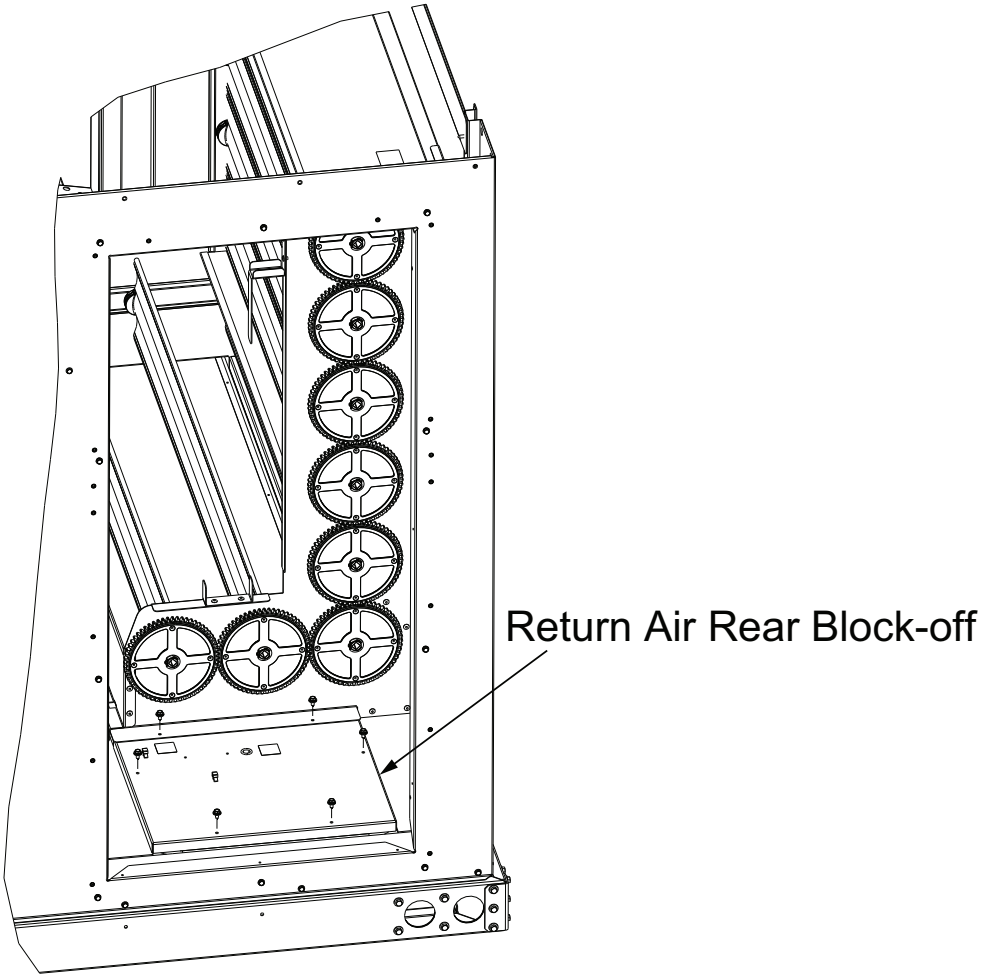

Note: *For Step 11 to Step 16, refer to Figure 19, p. 20.*

11. Attach the rear filter angle bracket (4) to the unit with four screws along the bottom of the damper assembly. The surface between the two parts has gasket pre-installed on the bracket. The side of the bracket with longest leg should be at the bottom.
12. Attach the filter side angle brackets (3) to both triangle hood panels using two screws each. The brackets should be installed on the flat side of the hood panel with the flanges facing away from the panel and the U facing up.
13. Attach the triangle hood panels (1 and 2) on the left and right side of the damper assembly. Use five screws for each hood panel. The hood panels have pre-installed gasket between the hood panels and the damper assembly. The flanges of the panels are to the outside of the unit.
14. Install the hood front support bracket (5) with two screws on each side onto the triangle hood panels. The hood front support bracket has pre-installed gasket that will face away from the unit.
15. Attach the filter top support bracket (6) in the middle of the bottom of each triangle hood panels with two screws on each side panel so the flat surface is facing down (U facing up).

16. Slide the filter into the filter frame that was just created in Step 11 to Step 15.

Figure 19. Hood assembly

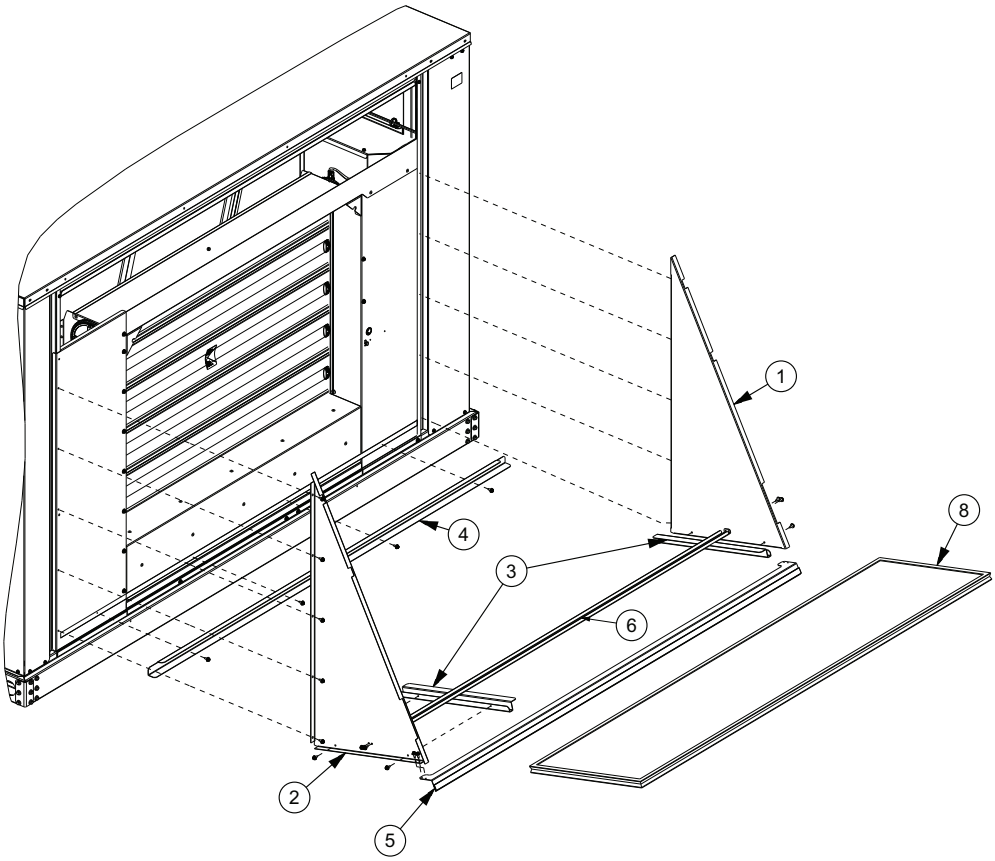

17. On the back panel removed and set aside in Step 1, attach the economizer diverter panel to the bottom of the back panel with four screws. The diverter panel will be on the outside surface with gasket pre-installed along the interface surface with the back panel.

Figure 20. Diverter panel installation to the end panel

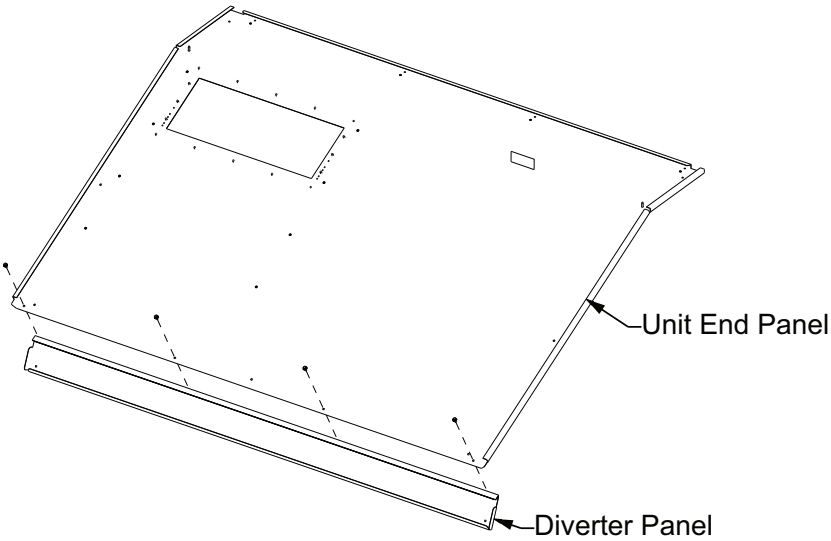

18. With the back panel pre-bent, install the back panel over top of the economizer assembly and fasten with screws. See Figure 21, p. 21.

Figure 21. Unit end panel re-installation

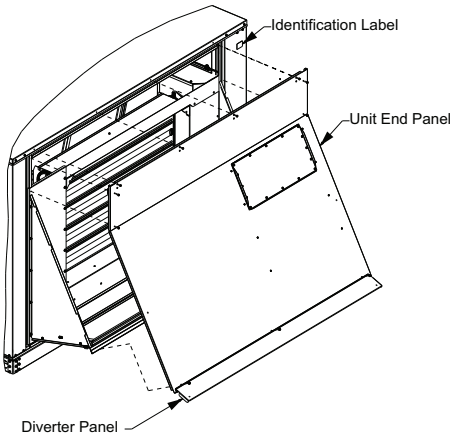

19. Install the access panels on the front and back of the unit. See the barometric relief installation and gasket instructions in *Barometric Relief Damper Packaged Rooftop Units 12.5 to 25 Tons Installation Instructions* (ACC-SVN286*-EN).

Figure 22. Back panel and barometric relief parts

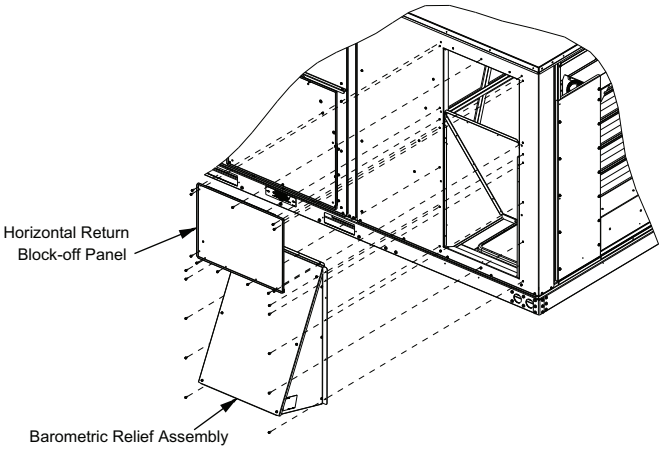

Note: *The back panel will be replaced with the barometric relief hood and block-off panel.*

20. Using field supplied silicone sealant, seal all seams, cracks and gaps around the back panel and vertical edge of the hood panels.

Figure 23. Sealant application location (both sides)

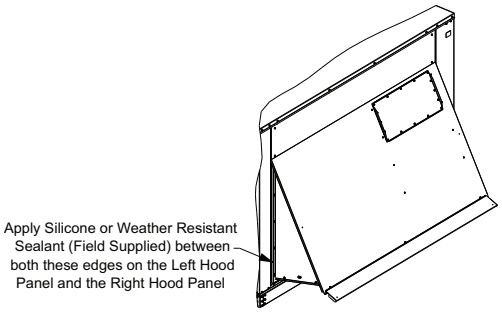

Field-Installed Assembly and Installation – FIAECON201*/02*

This section covers installation of low leak economizers for 3 to 12.5 ton horizontal units in the A, B, and C cabinet (model number digit 39 = A, B, and C).

Inspection

1. Unpack all components of the kit.
2. Check carefully for shipping damage. If any damage is found, report it immediately, and file a claim against the transportation company.

Parts List

Table 4. Parts list

Qty	Description
1	Outside air damper assembly
1	Return air damper assembly
1	Right hood panel
1	Left hood panel
1	Top hood panel
2	Filter side angle bracket
1	Base hood panel
1	Filter
1	Outside air block-off
1	Controls harness
Hardware bag	
54	Sheet metal screws with washer (#10-16 x 5/8 in.)
1	Identification label
1	Installation instructions
5	Push-in wire tie
1	Controls harness

Figure 24. Air damper assemblies and hood parts carton

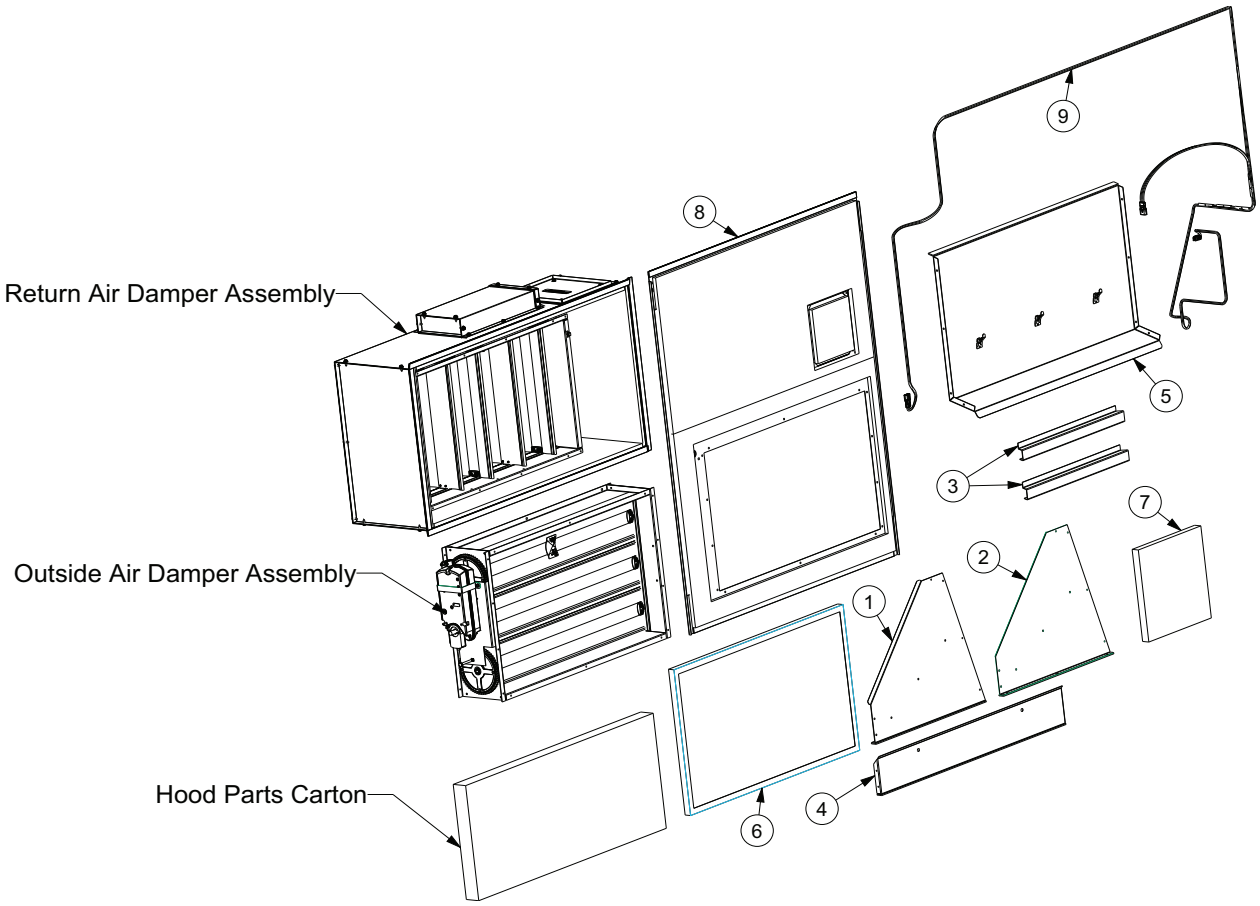

Figure 25. Horizontal low-leak economizer FIAECON201*/02*

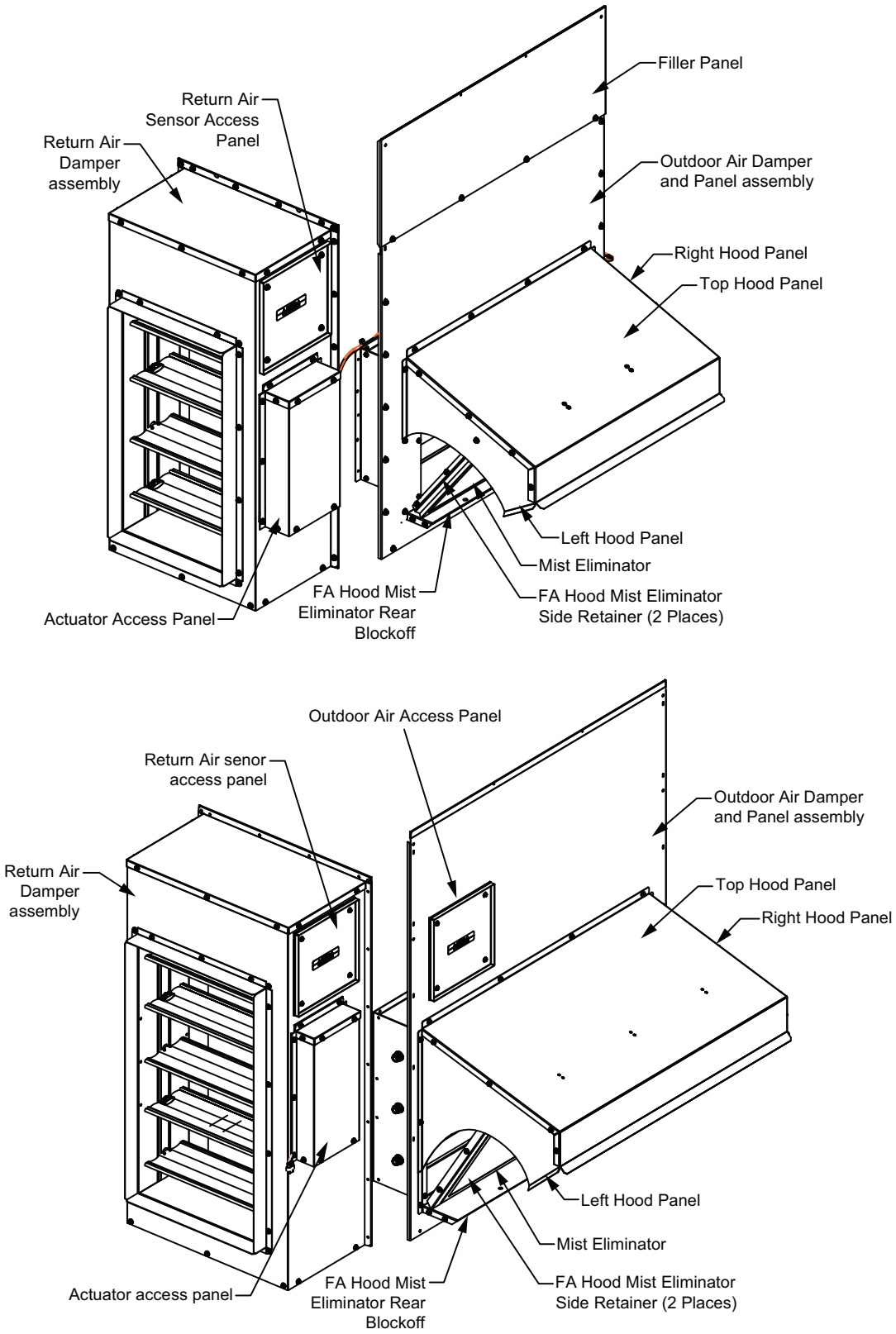

Horizontal Low Leak Economizer Units

This section covers installation of horizontal low leak economizer units.

1. Remove the existing economizer hood end panel (factory installed) from the unit and discard.
2. Remove both (front and rear) fresh air access panels from the unit and set them aside.
3. Remove carton containing ship with parts from the outdoor air damper assembly.
4. If the optional sensors for humidity and temperature monitoring are needed (FIAENTH001* and FIAENTH002*), install them using the instructions provided in those kits. For differential dry bulb installation and wiring follow instructions from "Installation," p. 27.
5. The smoke detector if used shall be converted to horizontal configuration at this stage. Instructions shall be followed from unit IOM document.
6. Install the outdoor air damper assembly into the unit, install single screw into alignment hole.
7. Use self-drilling screws through remaining large holes around perimeter of outdoor air damper.

Figure 26. Installing an outdoor damper assembly

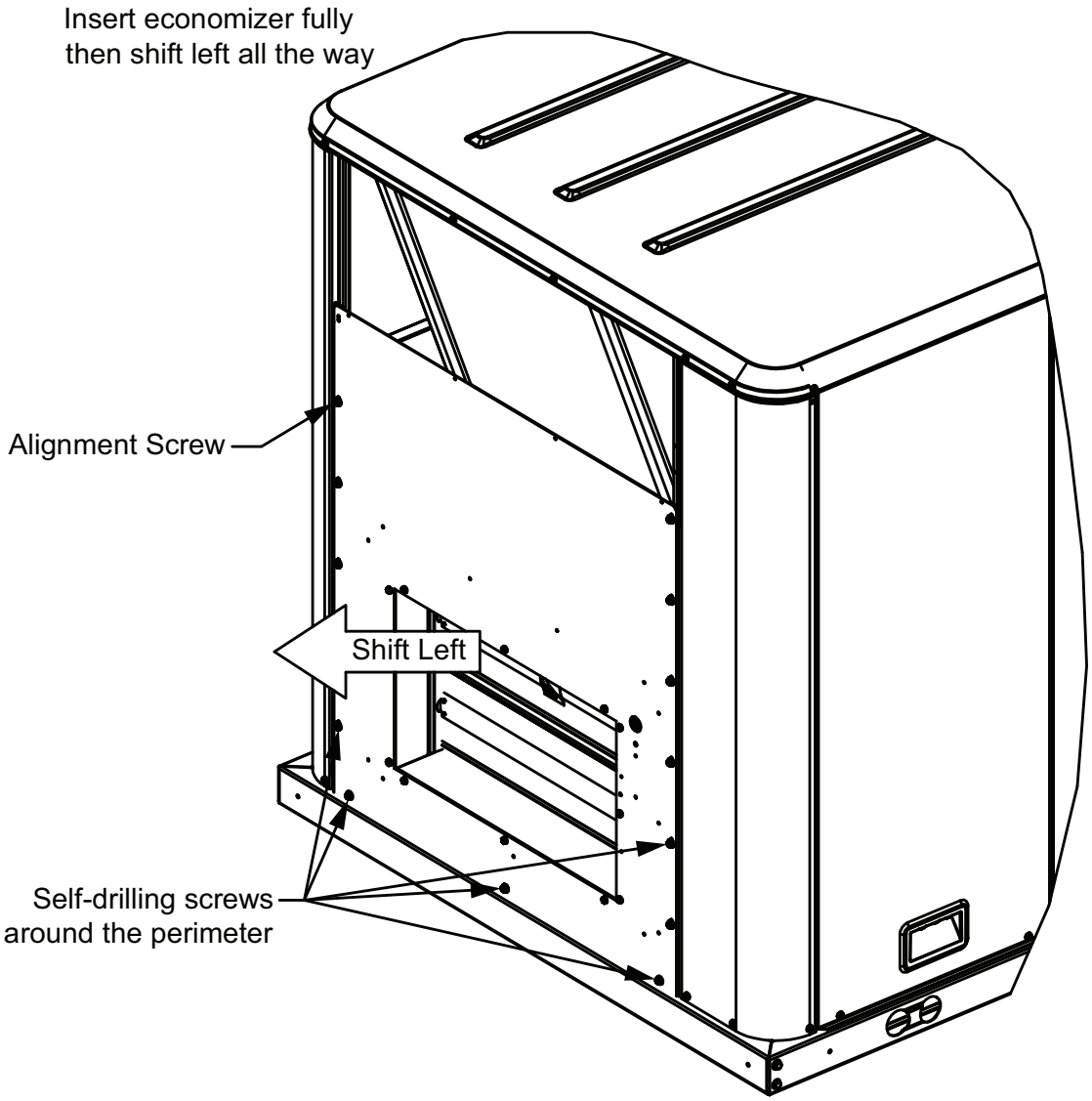

8. Run the control harness from filter access to the horizontal duct opening and connect it the return and outdoor air damper actuators. Remove sensor access and actuator access panels if necessary for easy access. See Figure 28, p. 26. Do not to trap or pinch the wire harness during damper installation.

Figure 27. Actuator and differential controls wire routing

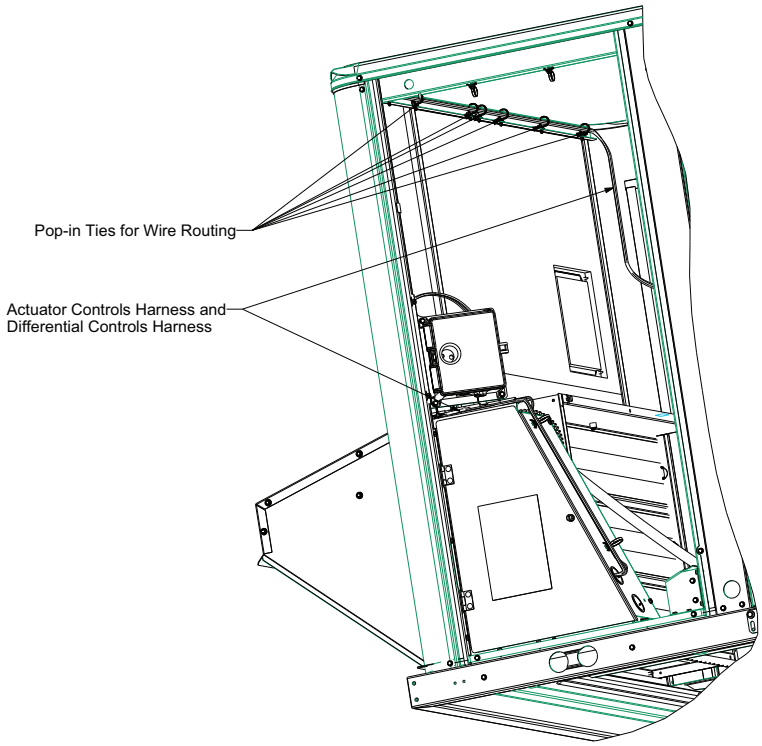

Figure 28. Return air damper assembly

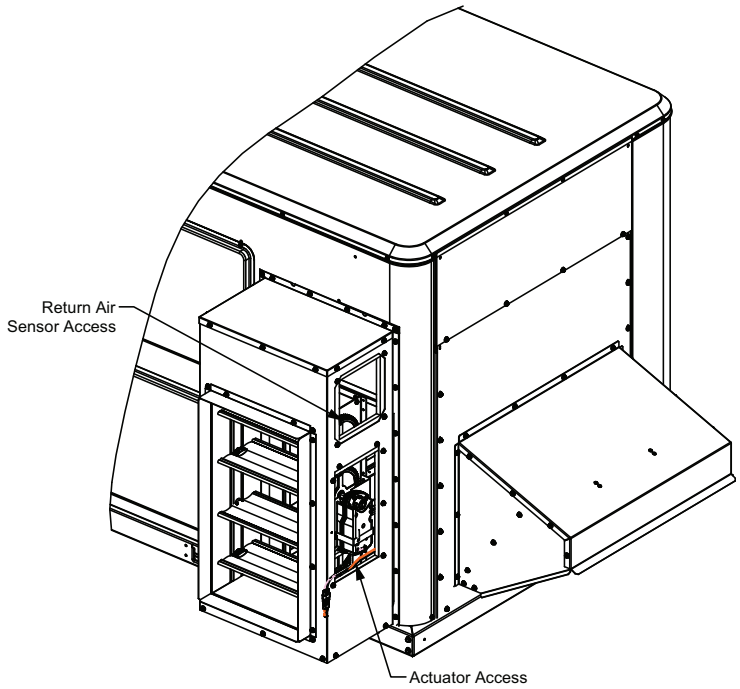

9. Lift the return air damper and rest it on the unit base at the horizontal return air unit opening as shown in Figure 28, p. 26 and then move the assembly towards left until the unit duct opening does not allow further movement.
10. Use self-drilling screws around the damper perimeter to secure the assembly in position.
11. Route the controls harness from the actuators to the fresh air options module located in the return enclosure using the factory installed wire ties as shown in the Figure 29, p. 27. Be sure the harness is away from all moving parts of the damper assemblies. Connect harness P11 to fresh air options module J11. Confirm the harness has a secure connection. See Figure 28, p. 26

Figure 29. FIAECON201 wire routing

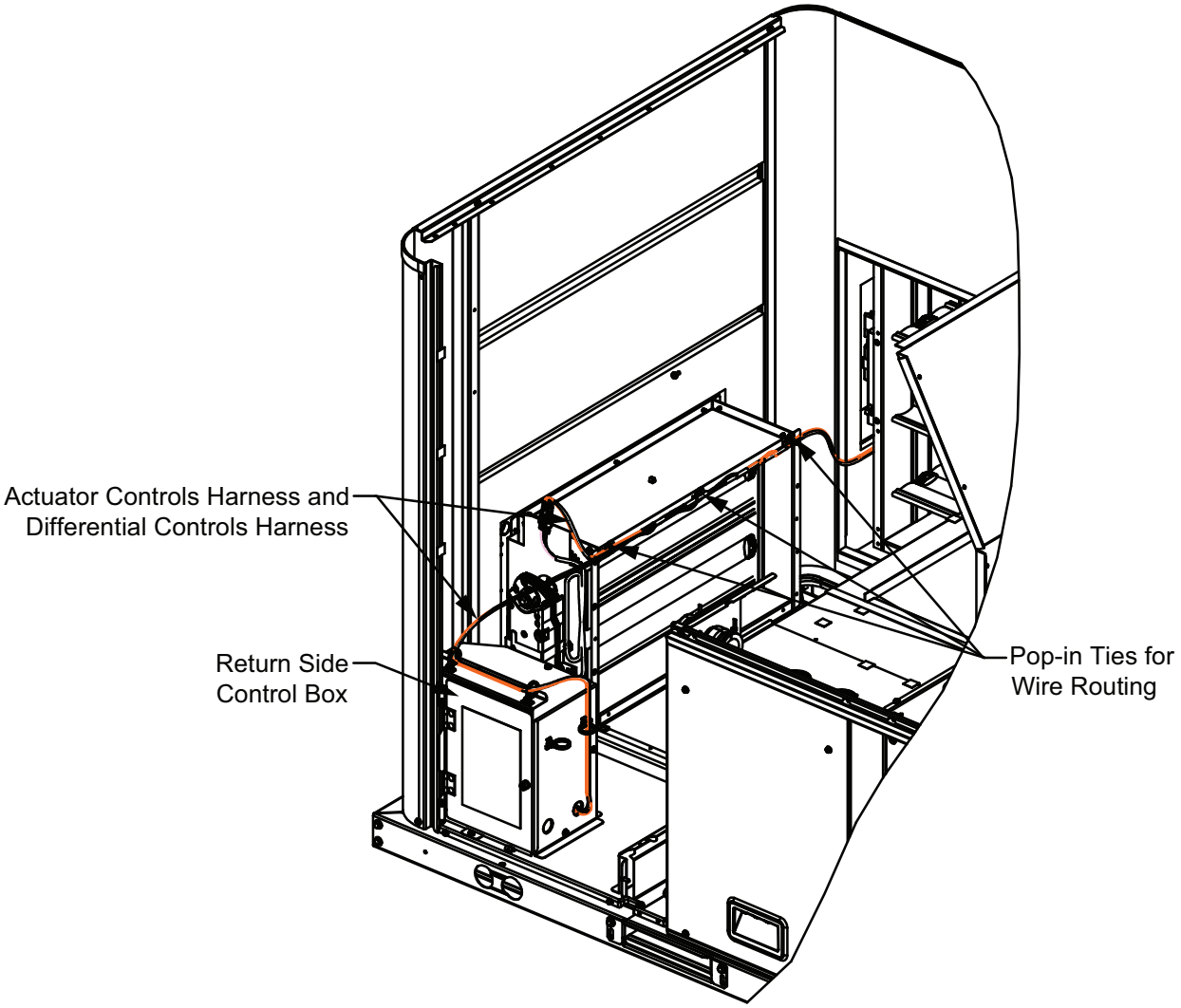

12. Attach the Mist Eliminator Rear Block-off to the unit using three screws with angled flange facing upward. The surface between the two parts has gasket pre-installed on the bracket.
13. Attach the mist eliminator side retainers to each side hood panel using three screws each.

    Attach the right and left hood panels to the unit using three screws each.

    Make sure the flat face is away from the unit.
14. Secure the side hood panels to the mist eliminator block-off using 2 screws each.

    The side hood panels have pre-installed gaskets between the side hood panels and damper assembly. The flanges of the side hood panels should face away from the unit as shown in Figure 28, p. 26.

15. Attach the top hood panel to the unit and side hood panels using screws. Surface between unit and top hood panel has pre-installed gasket.
16. Install the mist eliminator into the hood assembly, supported against the mist eliminator block-offs on either side.

    Secure with filter clips provided with the hood top.
17. Install the access panel on the front of the unit.
18. Install actuator and sensor access panels on return air damper assembly if removed in Step 8.
19. For FIAECON201 only, install the filler panel to the unit.
20. Using the field-supplied silicone sealant, seal all the seams, cracks, and gaps around the back panel, damper assemblies, hood, and vertical edge of the hood panels. See Figure 31, p. 29.

Figure 30. FIAECON201 outdoor air hood assembly

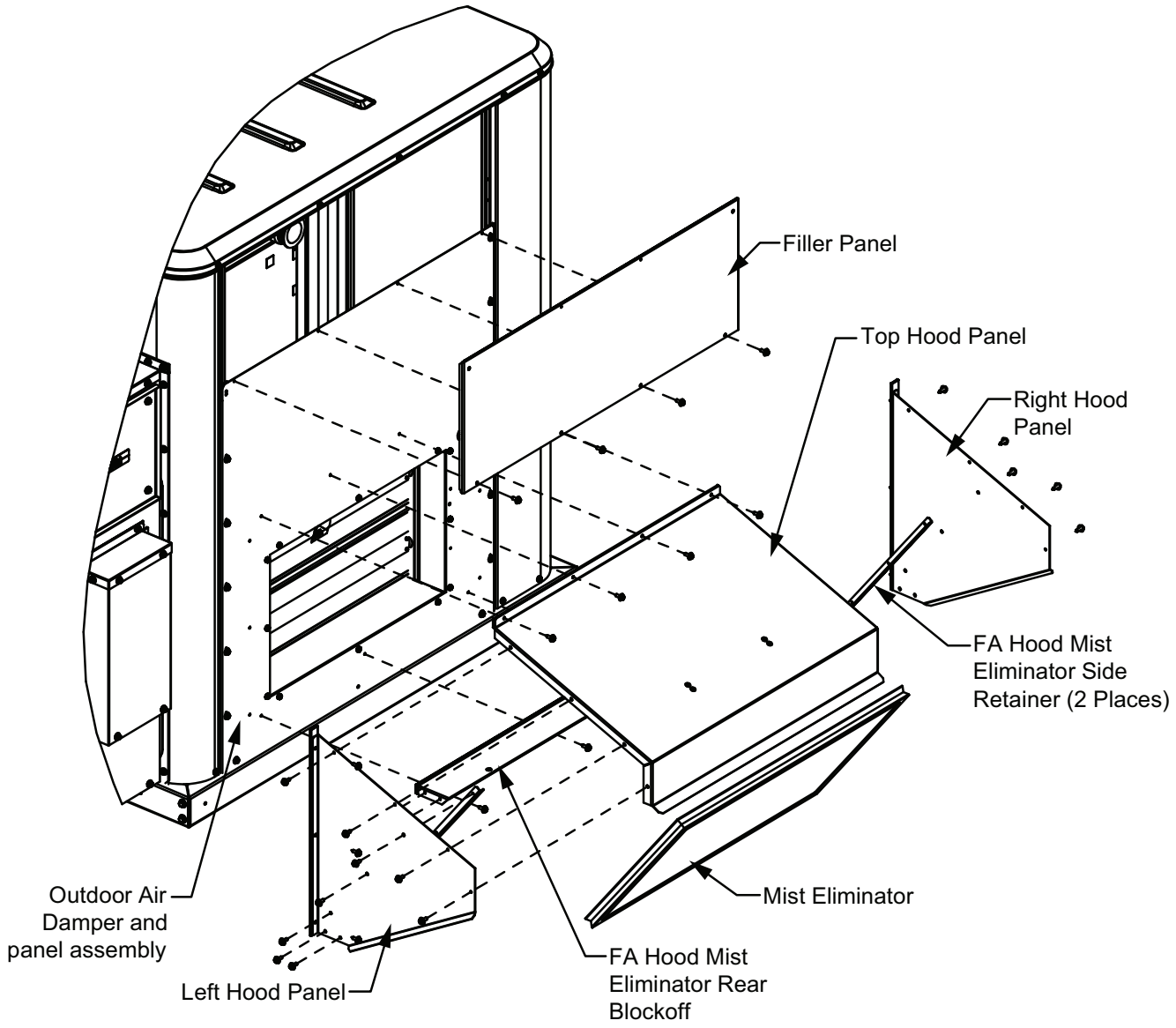

Figure 31. Sealant application for gaps around the damper assembly

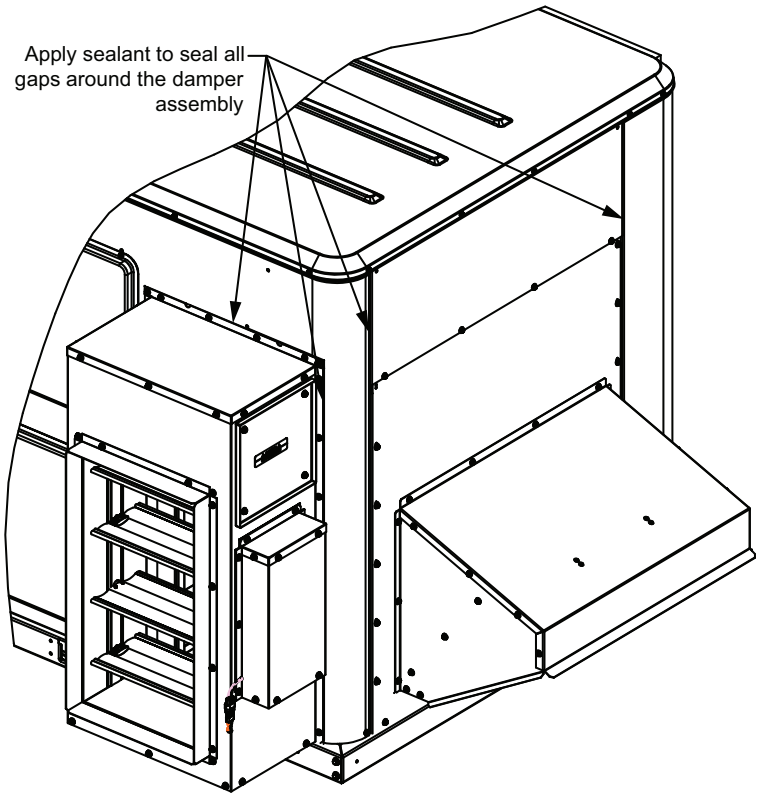

Figure 32. Seal application for the left and right hood panels

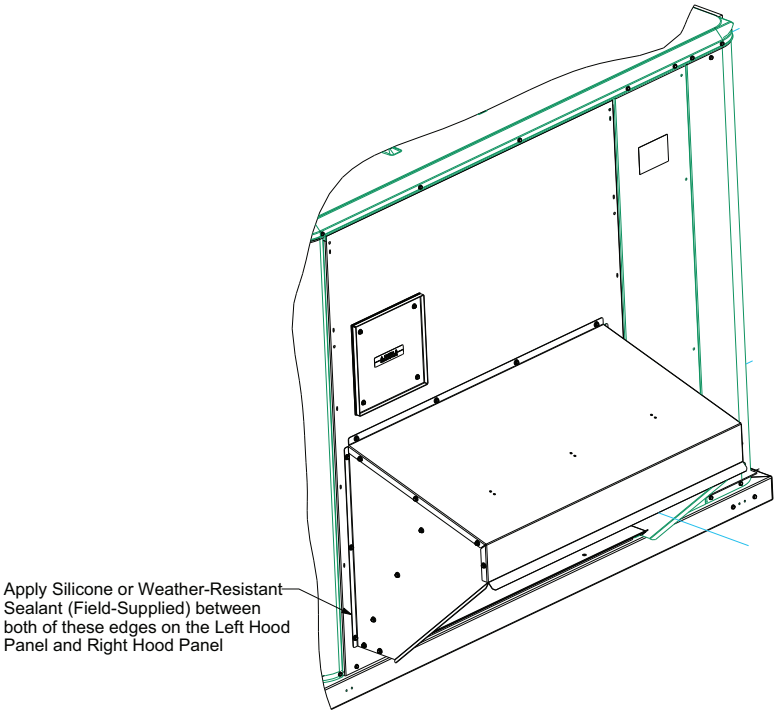

Installation – FIAECON203*

This section covers installation of low leak economizers for 12.5 to 25 ton horizontal units in the D cabinet (model number digit 39 = D).

Parts List

NOTICE

Corrosion Damage!

Failure to use recommended caulking/sealant could cause corrosion related failures to refrigerant components.

Table 5. Parts list

Item	Description	Qty
-	Outside air damper assembly	1
-	Return air damper assembly	1
Hood parts carton:		
1	Right hood panel	1
2	Left hood panel	1
3	Filter side angle bracket	2
4	Filter rear angle bracket	1
5	Hood front support bracket	1
6	Filter top support bracket	1
7	Economizer diverter panel	1
8	Filter	1
9	Hardware bag: • 54 Sheet metal screws with washer (#10-16x 5/8 in.) • 21 Seal-Tek screws with sealing washer (#10-16x 5/8 in.) • Identification label • Installation instructions	1
10	Outside air block-off	1
11	Controls harness	1
Field supplied part:		
-	Tube sealant - Trane recommends Sikaflex 221 (SEL00439)	-

Figure 33. Low leak economizer (horizontal)

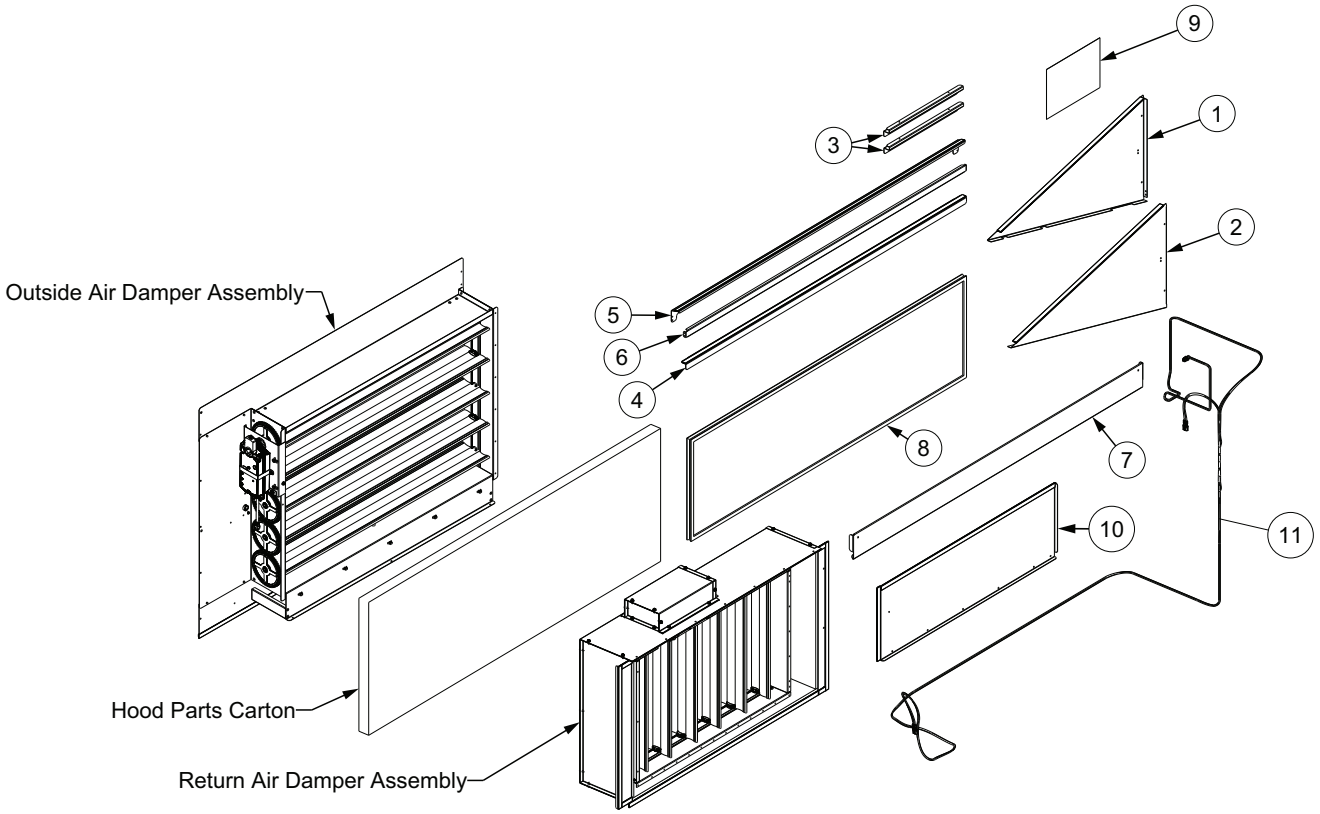

Installation

⚠WARNING

Heavy Object!

Failure to follow instructions below could result in severe injury and equipment damage. Economizer weighs over 50 pounds and should be installed by two people.

⚠WARNING

Hazardous Voltage w/Capacitors!

Failure to disconnect power and discharge capacitors before servicing could result in death or serious injury. Disconnect all electric power, including remote disconnects and discharge all motor start/run capacitors before servicing. Follow proper lockout/tagout procedures to ensure the power cannot be inadvertently energized. Verify with a CAT III or IV voltmeter rated per NFPA 70E that all capacitors have discharged.

Note: *Horizontal duct conversion kit is needed for this installation and is not included in the low leak economizer assembly.*

1. Remove the unit end panel and both (front and rear) fresh air access panels from the unit and set them aside.

2. Remove carton containing ship with parts from the outdoor air damper assembly.

   Refer to Figure 34, p. 32 for the following assembly process.
3. Install the horizontal duct conversion kit per the instructions included with that kit.
4. Install the outdoor air damper assembly into the unit and connect the control harness to the actuator.
5. Connect the control harness to the actuator on the horizontal return air damper. Secure with wire ties and install the horizontal return air damper into the unit. Do not to trap or pinch the wire harness during damper installation. See Figure 35, p. 33.

Figure 34. Installation of damper assemblies into unit

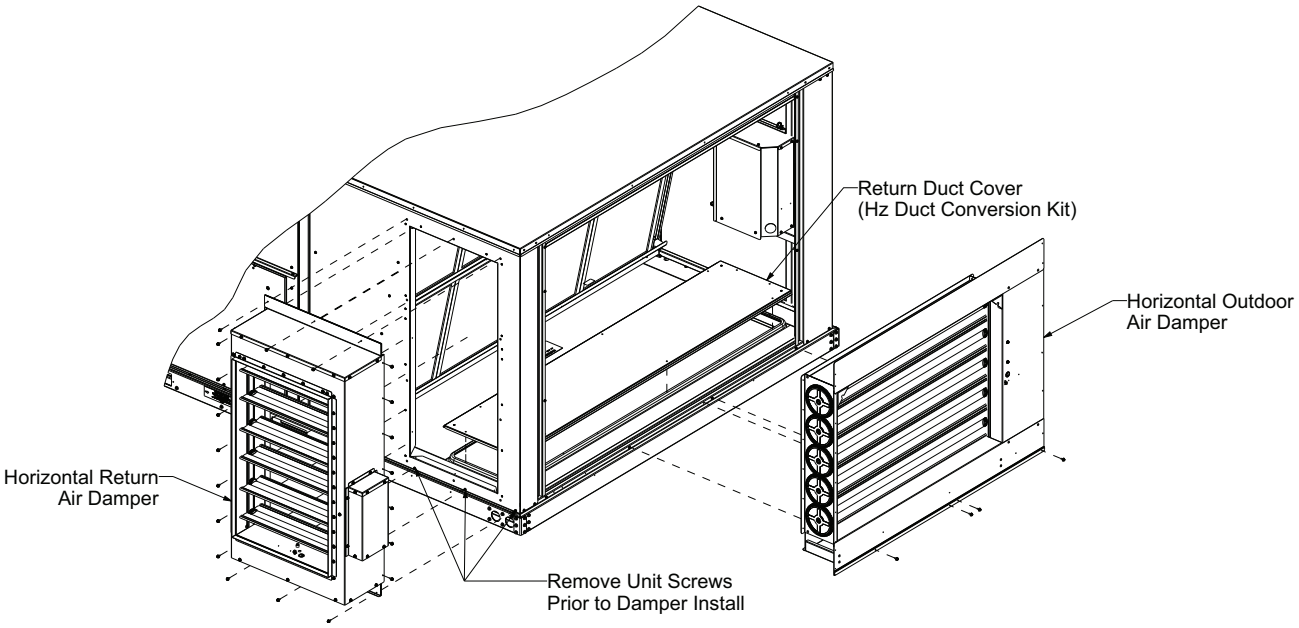

6. Route the controls harness from the actuators to the fresh air options module located in the return enclosure using the factory installed wire ties. Be sure the harness is away from all moving parts of the damper assemblies. Connect harness P11 to fresh air options module J11. Confirm the harness has a secure connection. See Figure 35, p. 33.

Note: *Wire ties have a releasable feature to allow them to be opened and closed.*

Figure 35. Wire harness routing

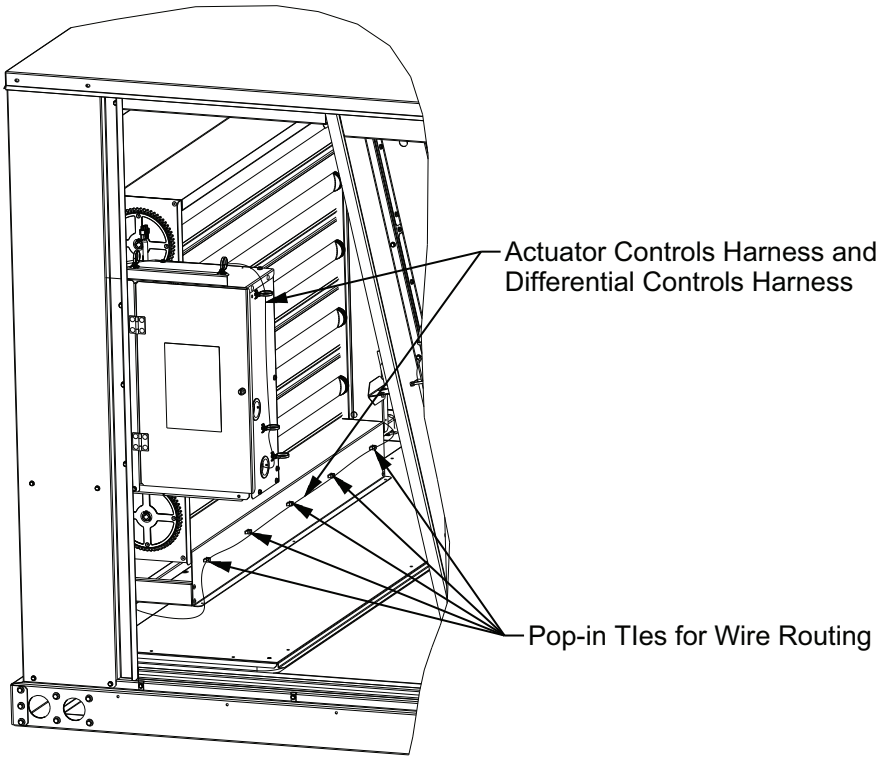

7. Install the outside air block-off panel on the left side of the outdoor air damper assembly as shown in Figure 36, p. 33. If differential dry bulb kit is installed, install the thermistor sensor in the hood prior to this step.

Figure 36. Outside air block-off installation

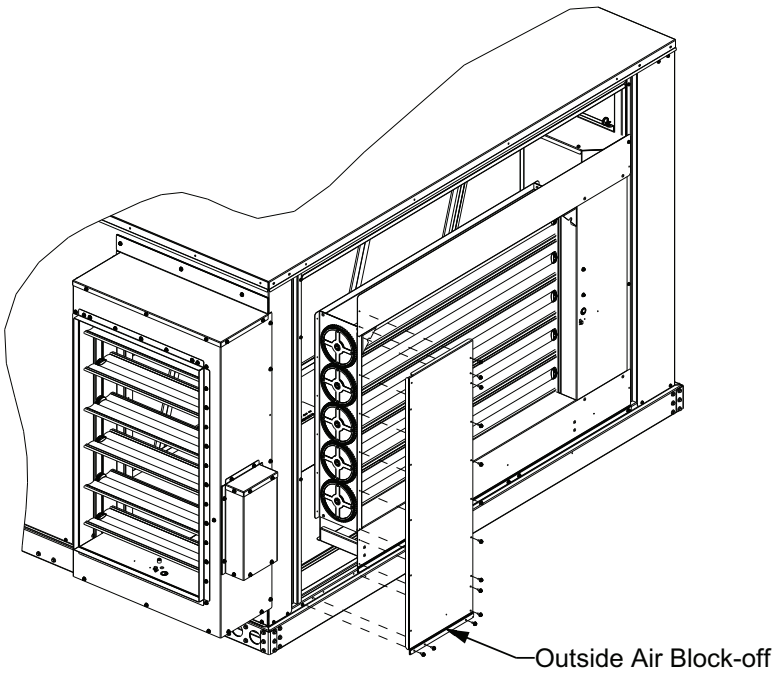

Refer to Figure 37, p. 34 for the hood assembly.

8. Attach the rear filter angle bracket (4) to the unit with four screws along the bottom of the damper assembly. The surface between the two parts has gasket pre-installed on the bracket. The side of the bracket with longest leg should be at the bottom.
9. Attach the filter side angle brackets (3) to both triangle hood panels using two screws each. The brackets should be installed on the flat side of the hood panel with the flanges facing away from the panel and the U facing up.
10. Attach the triangle hood panels (1 and 2) on the left and right side of the damper assembly. Use five screws for each hood panel. The hood panels have pre-installed gasket between the hood panels and the damper assembly. The flanges of the panels are to the outside of the unit.
11. Install the hood front support bracket (5) with two screws on each side onto the triangle hood panels. The hood front support bracket has pre-installed gasket that will face away from the unit.
12. Attach the filter top support bracket (6) in the middle of the bottom of each triangle hood panels with two screws on each side panel so the flat surface is facing down (U facing up).
13. Slide the filter into the filter frame that was just created in Step 8 to Step 12.

Figure 37. Flood assembly

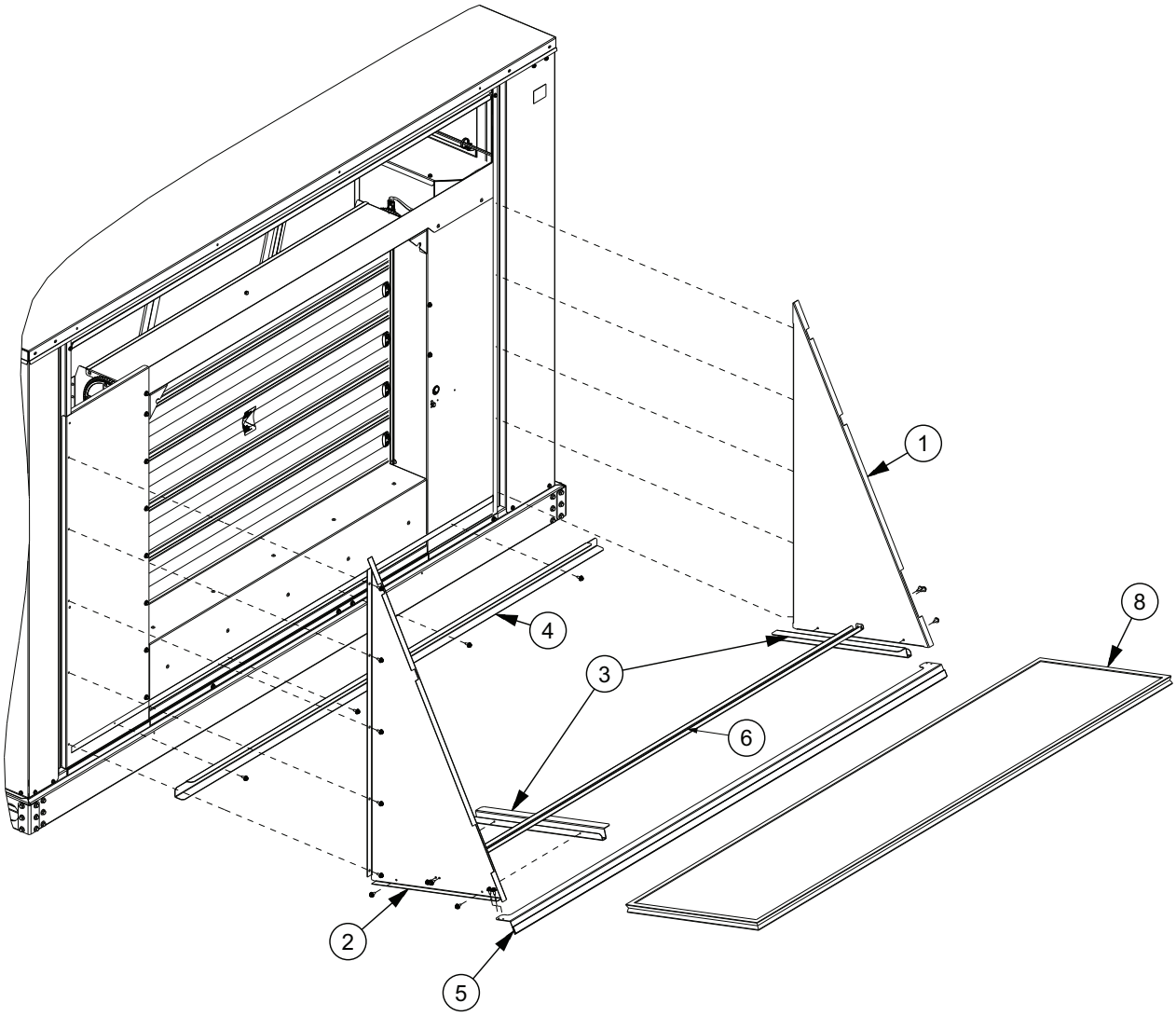

14. On the back panel that you removed and set aside in Step 1, attach the economizer diverter panel to the bottom of the back panel with four screws. The diverter panel will be on the outside surface with gasket pre-installed along the interface surface with the back panel.

Figure 38. Diverter panel installation

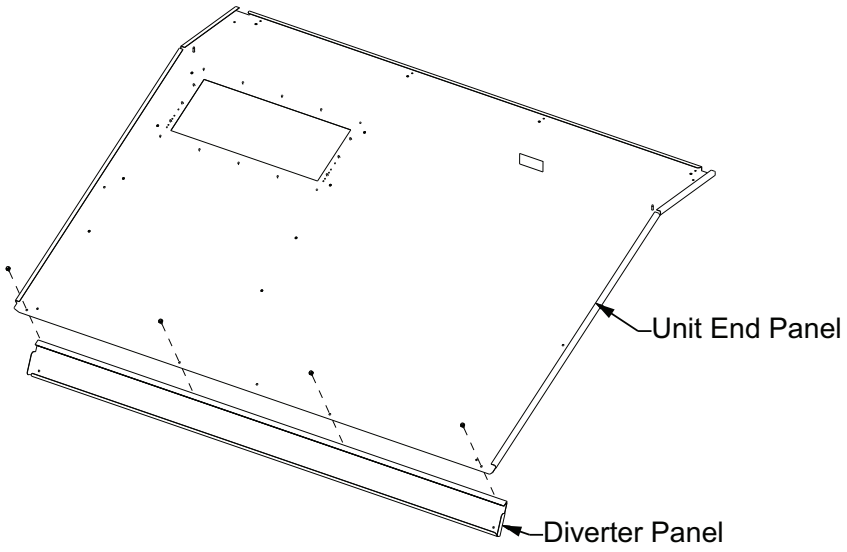

15. With the back panel pre-bent, install the back panel over top of the economizer assembly and fasten with screws.

    See Figure 39, p. 35.

Figure 39. Unit end panel re-installation

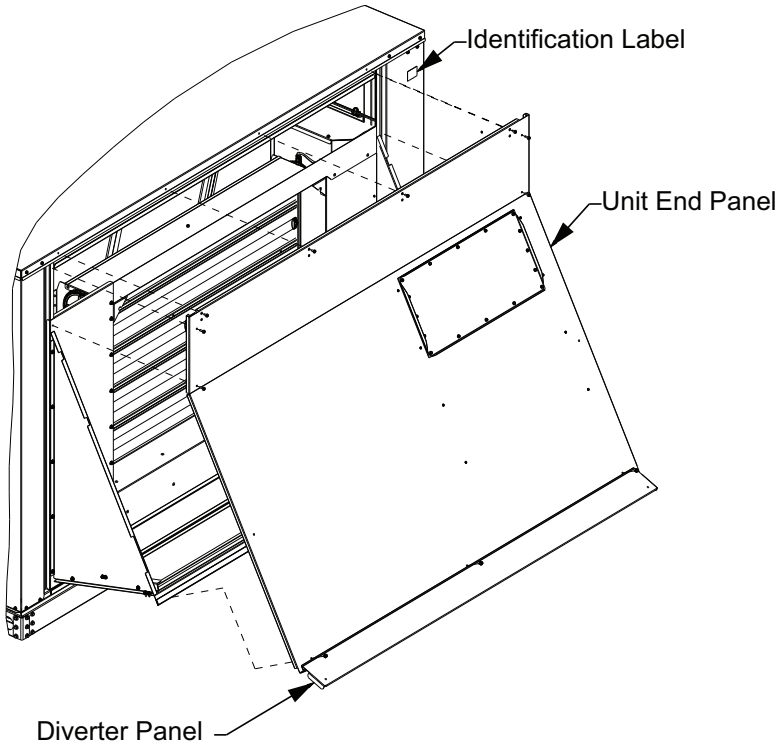

16. Install the access panel on the front of the unit.
17. Using field supplied silicone sealant, seal all seams, cracks and gaps around the back panel and vertical edge of the hood panels.

Figure 40. Sealant application location (both sides)

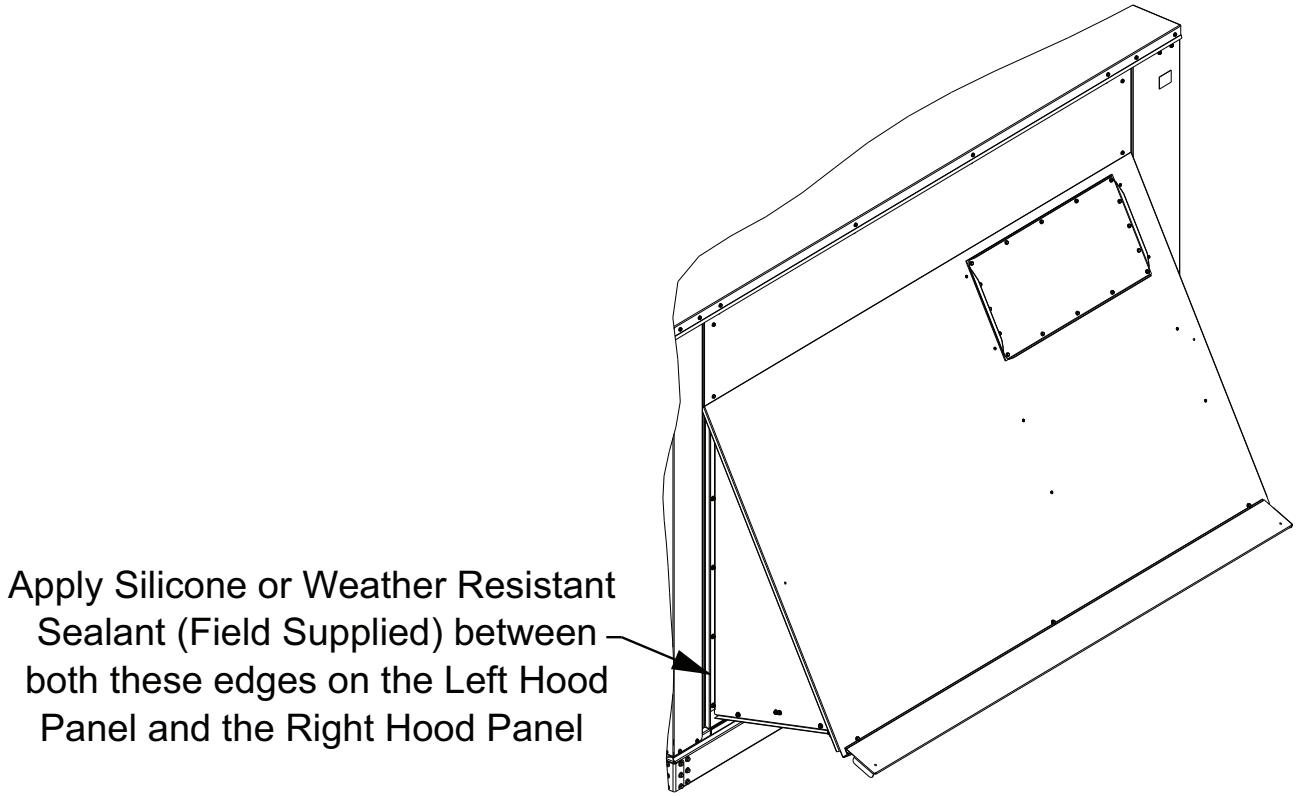

Differential Dry Bulb

Parts List

Table 6. Parts list

Qty	Description
1	Control harness
1	Temperature sensor
1	Bushing
1	Molded grommet
2	Wire tie
1	Installation instructions

Installation

1. Insert the molded grommet into the barometric relief block-off panel.
2. Install the thermistor sensor into the grommet; refer to Figure 42, p. 38 for downflow or Figure 46, p. 40 for horizontal installation.

Figure 41. Differential dry bulb thermistor location for downflow LLE

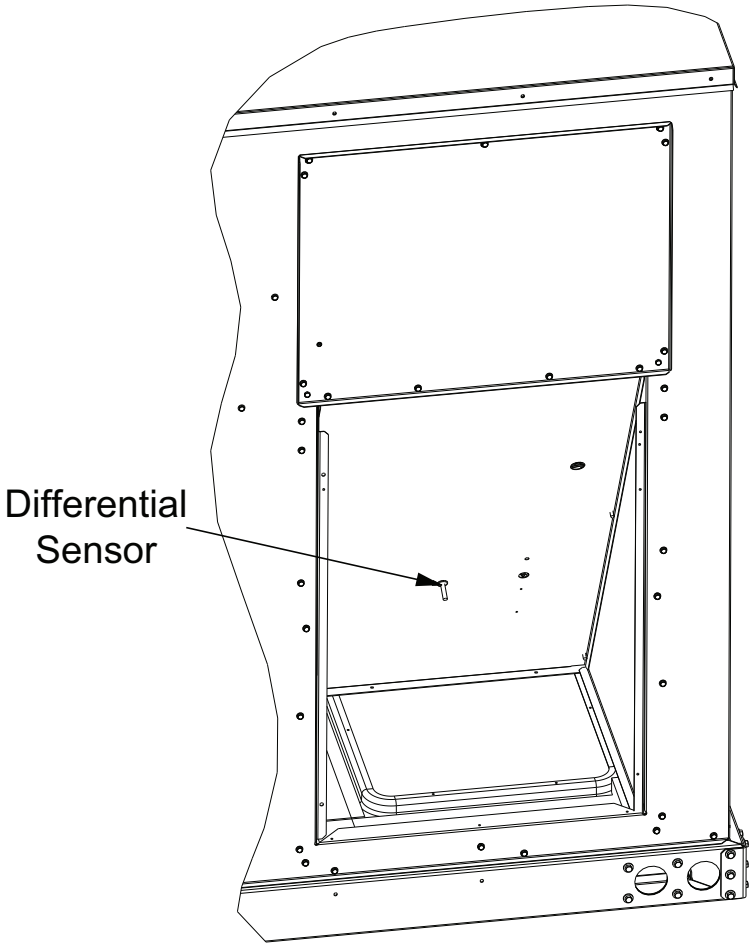

Differential Dry Bulb

Figure 42. Differential dry bulb thermistor for downflow LLE

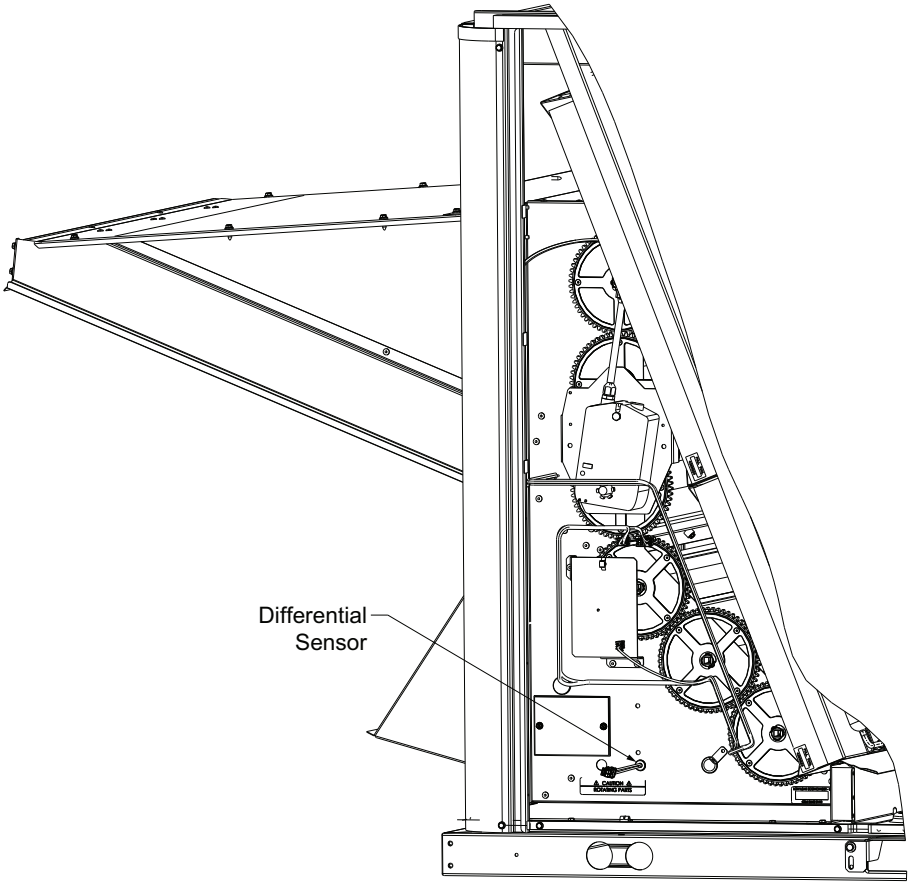

3. Connect the control harness and route the controls harness from the sensor to the fresh air options module located in the return enclosure using the factory-installed wire ties.

   Connect the harness J9 connector to the fresh air options module P9 and secure it with wire ties to keep the harness from any moving parts on the low leak economizer. Confirm that the harness has a secure connection.

Notes:

- *Wire ties have a releasable feature to allow them to be opened and closed.*
- *Uninstalled components are located in the return enclosure.*

Figure 43. Wire harness routing

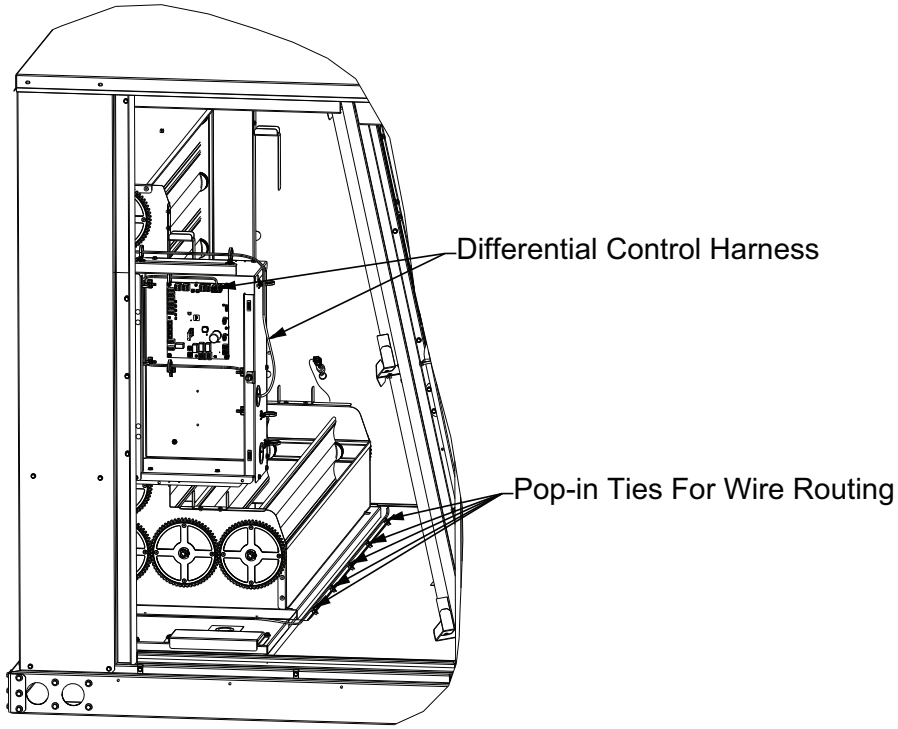

Figure 44. Wire harness routing

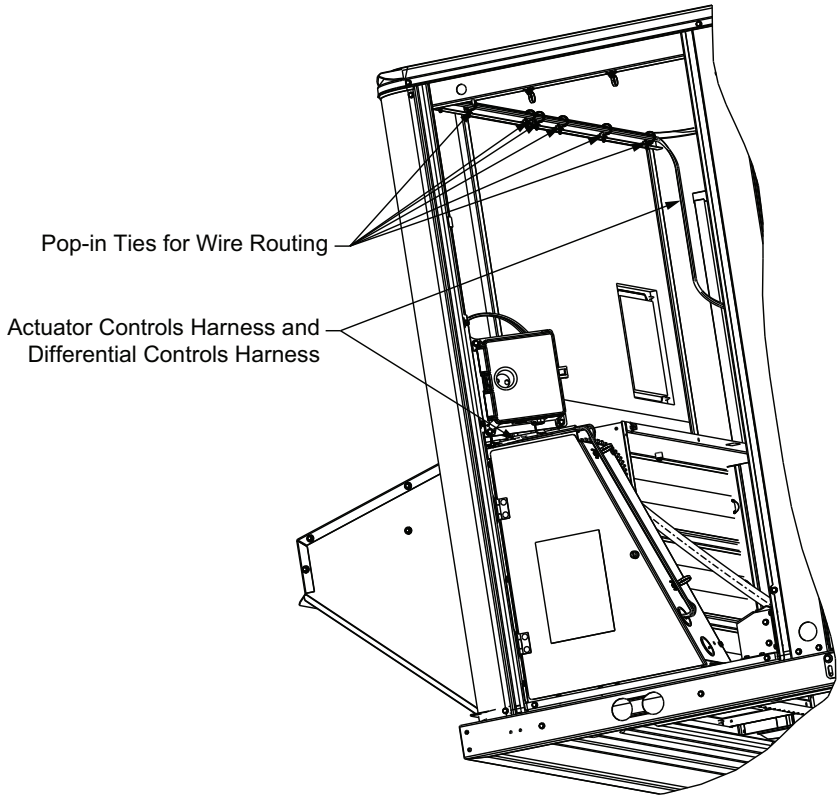

Differential Dry Bulb

Figure 45. Differential dry bulb thermistor location for horizontal LLE

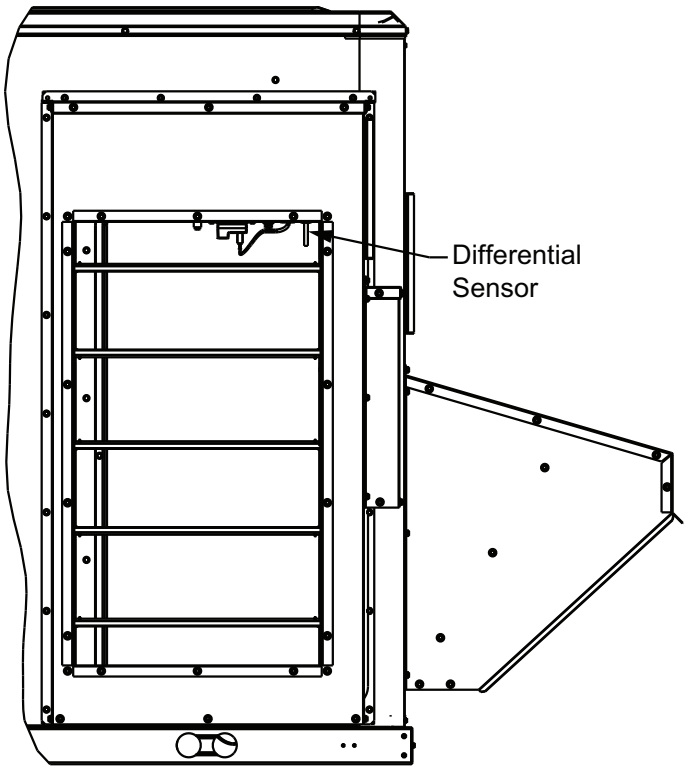

Figure 46. Differential temperature for FIAECON201/02

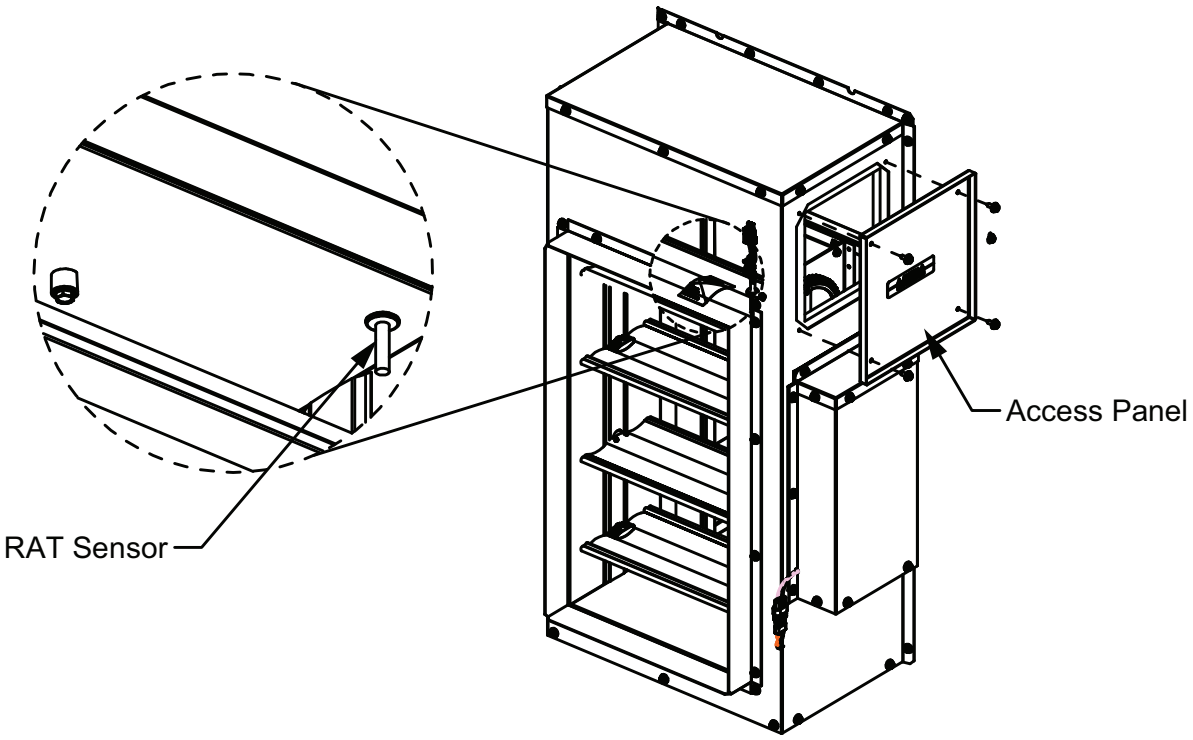

Figure 47. Differential temperature for FIAECON101/02

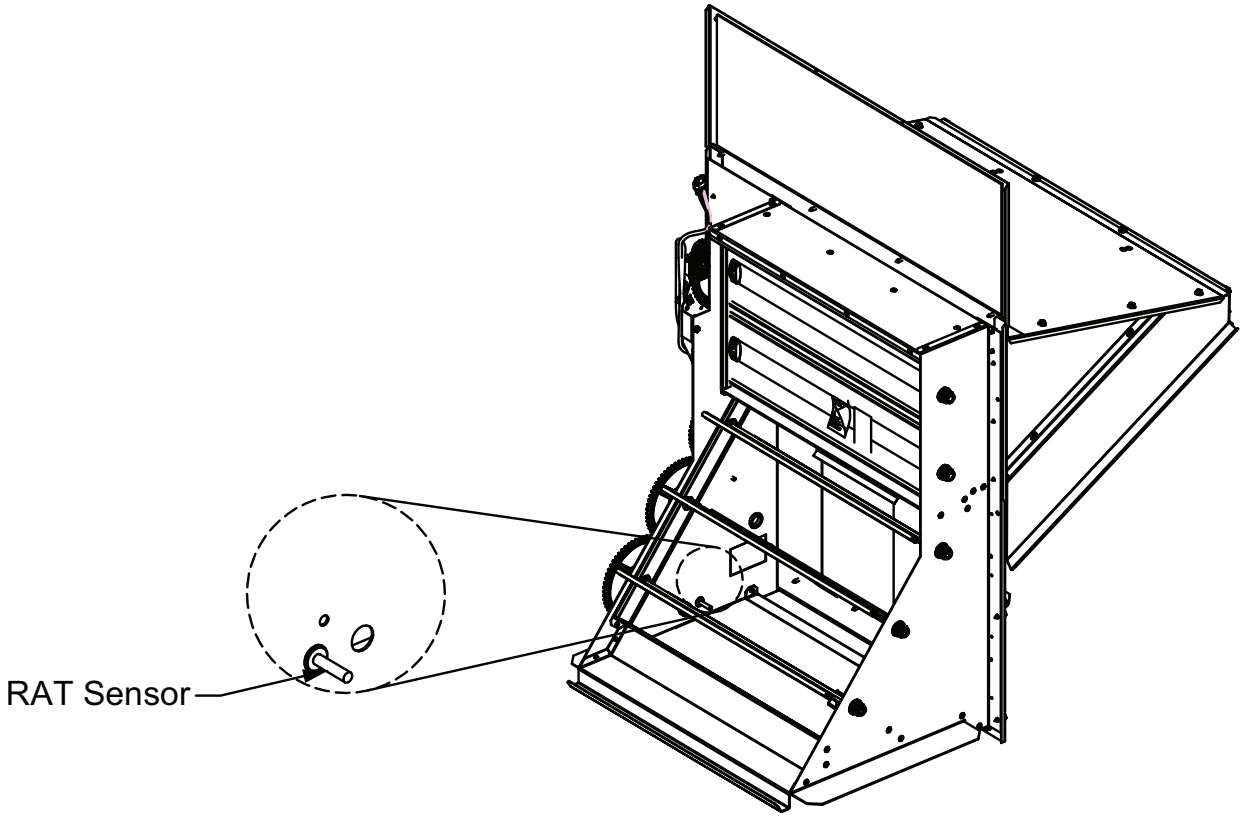

Settings

Minimum Position Setting for a One-Speed Indoor Fan

1. Apply power to the unit.
2. Place the zone sensor fan selector in the fan **ON** position and the heat/cool selector in the **OFF** position to place the damper in the minimum-ventilation position.
3. The **Minimum Position** (on the rooftop economizer) can be adjusted using the Symbio™ 700 or mobile app.

   In the **Settings -> Fresh/Return Air Menu**, the **Minimum Position** can be adjusted between 0% to 50%.
4. Wait for at least 30 seconds for the damper to settle at the new position.
5. Replace the filter access panel.

   The damper will close when the blow circuit is no longer energized.

Minimum Position Setting

1. Apply power to the unit.
2. Using Service Test mode, through the Symbio™ 700 or mobile app, set the unit to Service Test step **Ventilation Low Fan Speed**.
3. Navigate to the Settings –> Fresh/Return Air menu. Set the Design Minimum OA Damper Position at Min Fan Capacity to the desired value.
4. Wait at least 30 seconds for the damper to settle at the new position. Range of damper for this setting is 0 to 100%.
5. Using Service Test mode, through the Symbio 700 or mobile app, set the unit to Service Test step **Ventilation Low Fan Speed**.
6. Navigate to the Settings –> Fresh/Return Air menu.

   Set the Design Minimum OA Damper Position at Mid Fan Capacity to the desired value.
7. Wait at least 30 seconds for the damper to settle at the new position.

   The range of the damper for this setting is 0-100%.
8. Using Service Test mode, through the Symbio 700 or mobile app, set the unit to Service Test step **Ventilation Low Fan Speed**.
9. Navigate to the Settings –> Fresh/Return Air menu.

   Set the Design Minimum OA Damper Position at Full Fan Capacity to the desired value.
10. Wait at least 30 seconds for the damper to settle at the new position.

    The range of the damper for this setting is 0 to 100%.
11. Replace the filter access panel.

    The damper will close when the blower circuit is de-energized.

Reference Enthalpy Settings

Economizer enthalpy changeover is field-selectable and has a range of 50 to 140°F. The default is 60°F.

This selection can be made by using the Symbio™ service and installation mobile app or through the Symbio™ 700 on-board UI.

Dry Bulb Settings

Economizer dry bulb changeover is field selectable and has a range of 50°F to 140°F.

Table 7. Precedent economizer control options

Control Option	Enable Conditions	Option Sensor Required
Comparative Enthalpy	Outside Air Enthalpy < Return Air Enthalpy – Econ Enthalpy Offset and Outside Air Temperature < Economizer Drybulb Setpoint – Econ DryBulb Offset	Outdoor Air Temperature Sensor Outdoor Air Humidity Sensor Return Air Temperature Sensor Return Air Humidity Sensor
Reference Enthalpy	Outside Air Enthalpy < Reference Enthalpy Setpoint – Econ Enthalpy Offset and Outside Air Temperature < Economizer Drybulb Setpoint - Econ DryBulb Offset	Outdoor Air Temperature Sensor Outdoor Air Humidity Sensor
Dry Bulb	OA Temp < [Economizer Outdoor Air Enable Setpoint BAS - Economizer Dry Bulb Enable Offset]	Outdoor Air Temperature Sensor
Differential Dry Bulb	OA Temp < RA Temp - Economizer Dry Bulb Enable Offset - Economizer Dry Bulb Disable Return Air Offset	Outdoor Air Temperature Sensor Return Air Temperature Sensor

Trane and American Standard create comfortable, energy efficient indoor environments for commercial and residential applications. For more information, please visit trane.com or americanstandardair.com.

ACC-SVN264F-EN 30 Aug 2024
Supersedes ACC-SVN264E-EN (Jan 2024)